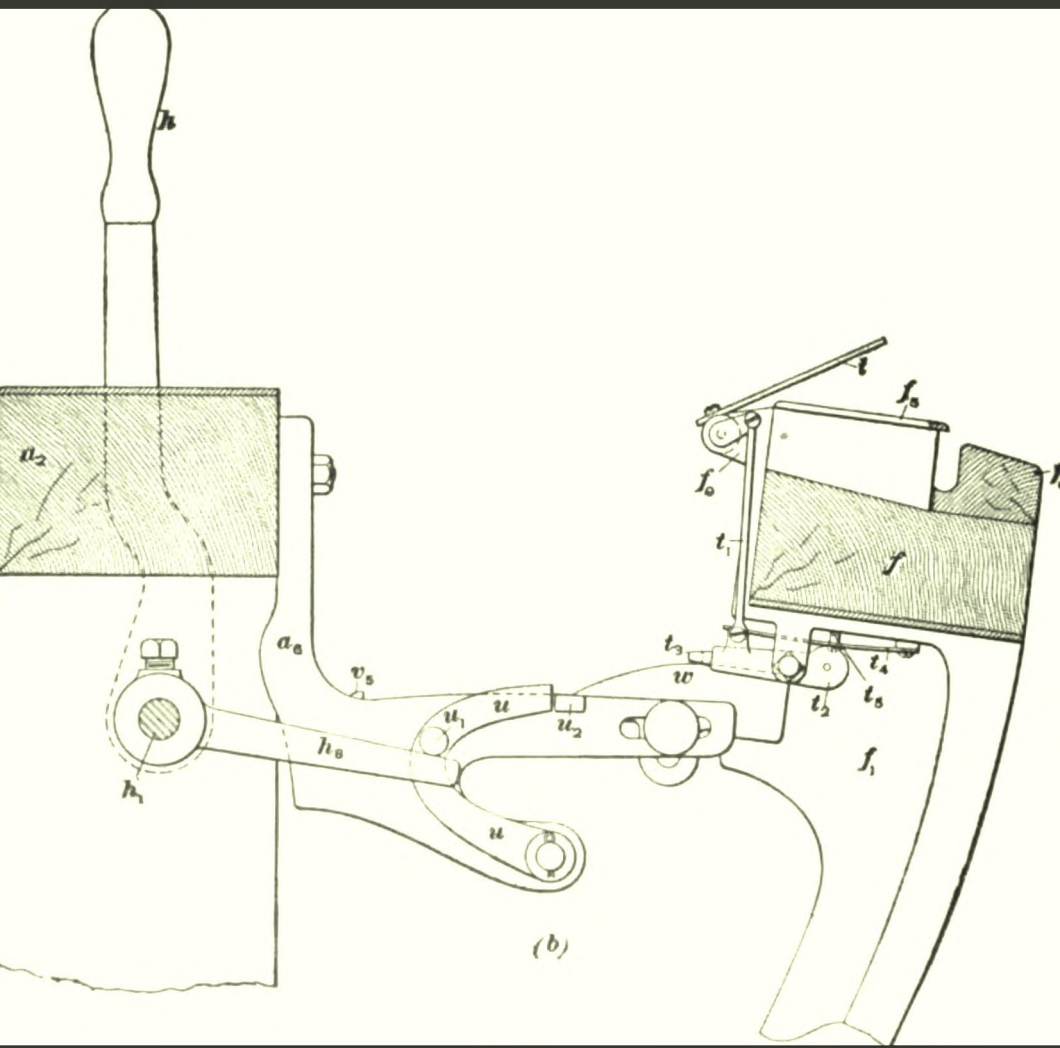

Woolen and Worsted Cam-looms ; Woolen and ...

International Correspondence Schools, International Textbook Company

Digitized by Google

K.F. WENDT LIBRARY
UW COLLEGE OF ENGR.
215 N. RANDALL AVENUE
MADISON WI 53706

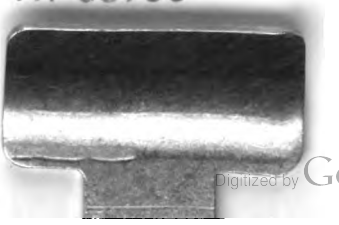

Digitized by Google

Digitized by Google

Digitized by Google

Digitized by Google

Digitized by Google

Digitized by Google

Digitized by Google

INTERNATIONAL LIBRARY OF TECHNOLOGY

A SERIES OF TEXTBOOKS FOR PERSONS ENGAGED IN THE ENGINEERING PROFESSIONS AND TRADES OR FOR THOSE WHO DESIRE INFORMATION CONCERNING THEM. FULLY ILLUSTRATED AND CONTAINING NUMEROUS PRACTICAL EXAMPLES AND THEIR SOLUTIONS

WOOLEN AND WORSTED CAM-LOOMS
WOOLEN AND WORSTED FANCY LOOMS
WOOLEN AND WORSTED LOOM FIXING
PLAIN LOOMS
FIXING LOOMS
LOOM ATTACHMENTS
AUTOMATIC LOOMS
DOBBIES
LENO ATTACHMENTS
BOX MOTIONS
JACQUARDS

SCRANTON:
INTERNATIONAL TEXTBOOK COMPANY
80

Digitized by Google

Copyright, 1906, by INTERNATIONAL TEXTBOOK COMPANY.

Entered at Stationers' Hall, London.

Woolen and Worsted Cam-Looms: Copyright, 1905, by INTERNATIONAL TEXTBOOK COMPANY. Entered at Stationers' Hall, London.

Woolen and Worsted Fancy Looms: Copyright, 1905, by INTERNATIONAL TEXTBOOK COMPANY. Entered at Stationers' Hall, London.

Woolen and Worsted Loom Fixing: Copyright, 1905, by INTERNATIONAL TEXTBOOK COMPANY. Entered at Stationers' Hall, London.

Plain Looms: Copyright, 1900, by CHRISTOPHER PARKINSON BROOKS. Copyright, 1903, by INTERNATIONAL TEXTBOOK COMPANY. Entered at Stationers' Hall, London.

Fixing Looms: Copyright, 1900, by CHRISTOPHER PARKINSON BROOKS. Copyright, 1903, by INTERNATIONAL TEXTBOOK COMPANY. Entered at Stationers' Hall, London.

Loom Attachments: Copyright, 1900, by CHRISTOPHER PARKINSON BROOKS. Copyright, 1903, by INTERNATIONAL TEXTBOOK COMPANY. Entered at Stationers' Hall, London.

Automatic Looms: Copyright, 1900, by CHRISTOPHER PARKINSON BROOKS. Copyright, 1903, by INTERNATIONAL TEXTBOOK COMPANY. Entered at Stationers' Hall, London.

Dobbies: Copyright, 1900, by CHRISTOPHER PARKINSON BROOKS. Copyright, 1905, by INTERNATIONAL TEXTBOOK COMPANY. Entered at Stationers' Hall, London.

Leno Attachments: Copyright, 1900, by CHRISTOPHER PARKINSON BROOKS. Copyright, 1905, by INTERNATIONAL TEXTBOOK COMPANY. Entered at Stationers' Hall, London.

Box Motions: Copyright, 1901, by CHRISTOPHER PARKINSON BROOKS. Copyright, 1905, by INTERNATIONAL TEXTBOOK COMPANY. Entered at Stationers' Hall, London.

Jacquards, Part 1: Copyright, 1901, by CHRISTOPHER PARKINSON BROOKS. Copyright, 1905, by INTERNATIONAL TEXTBOOK COMPANY. Entered at Stationers' Hall, London.

Jacquards, Parts 2 and 3: Copyright, 1905, by INTERNATIONAL TEXTBOOK COMPANY. Entered at Stationers' Hall, London.

All rights reserved.

E O PRINTED IN THE UNITED STATES.

Digitized by Google

104445
MAR 3 0 1907
SB
.IN82
80

PREFACE.

The International Library of Technology is the outgrowth of a large and increasing demand that has arisen for the Reference Libraries of the International Correspondence Schools on the part of those who are not students of the Schools. As the volumes composing this Library are all printed from the same plates used in printing the Reference Libraries above mentioned, a few words are necessary regarding the scope and purpose of the instruction imparted to the students of—and the class of students taught by—these Schools, in order to afford a clear understanding of their salient and unique features.

The only requirement for admission to any of the courses offered by the International Correspondence Schools, is that the applicant shall be able to read the English language and to write it sufficiently well to make his written answers to the questions asked him intelligible. Each course is complete in itself, and no textbooks are required other than those prepared by the Schools for the particular course selected. The students themselves are from every class, trade, and profession and from every country; they are, almost without exception, busily engaged in some vocation, and can spare but little time for study, and that usually outside of their regular working hours. The information desired is such as can be immediately applied in practice, so that the student may be enabled to exchange his present vocation for a more congenial one, or to rise to a higher level in the one he now pursues. Furthermore, he wishes to obtain a good working knowledge of the subjects treated in the shortest time and in the most direct manner possible.

Digitized by Google

In meeting these requirements, we have produced a set of books that in many respects, and particularly in the general plan followed, are absolutely unique. In the majority of subjects treated the knowledge of mathematics required is limited to the simplest principles of arithmetic and mensuration, and in no case is any greater knowledge of mathematics needed than the simplest elementary principles of algebra, geometry, and trigonometry, with a thorough, practical acquaintance with the use of the logarithmic table. To effect this result, derivations of rules and formulas are omitted, but thorough and complete instructions are given regarding how, when, and under what circumstances any particular rule, formula, or process should be applied; and whenever possible one or more examples, such as would be likely to arise in actual practice—together with their solutions—are given to illustrate and explain its application.

In preparing these textbooks, it has been our constant endeavor to view the matter from the student's standpoint, and to try and anticipate everything that would cause him trouble. The utmost pains have been taken to avoid and correct any and all ambiguous expressions—both those due to faulty rhetoric and those due to insufficiency of statement or explanation. As the best way to make a statement, explanation, or description clear, is to give a picture or a diagram in connection with it, illustrations have been used almost without limit. The illustrations have in all cases been adapted to the requirements of the text, and projections and sections or outline, partially shaded, or full-shaded perspectives, have been used, according to which will best produce the desired results. Half-tones have been used rather sparingly, except in those cases where the general effect is desired rather than the actual details.

It is obvious that books prepared along the lines mentioned must not only be clear and concise beyond anything heretofore attempted, but they must also possess unequaled value for reference purposes. They not only give the maximum of information in a minimum space, but this information is so ingeniously arranged and correlated, and the

Digitized by Google

indexes are so full and complete, that it can at once be made available to the reader. The numerous examples and explanatory remarks, together with the absence of long demonstrations and abstruse mathematical calculations, are of great assistance in helping one to select the proper formula, method, or process and in teaching him how and when it should be used.

This volume deals with looms and the process of weaving. After consideration is given to the elementary loom and the functions of its parts, due attention is paid to the erection of looms, the insertion of the warp, the proper adjustment of the parts, and the location of faults. Then follow descriptions of auxiliary parts used in looms, such as cams and selvage motions. Automatic looms are then taken up, illustrated by means of one of the leading types; then the important subjects of dobbies and box motions, with their application to special looms, are given careful consideration. Proceeding to more complicated devices, those attachments are described that are used in leno weaving, and, finally, the jacquard machine is considered. Beginning with the construction of the single-lift jacquard, and proceeding to the double-lift and the double-lift double-cylinder jacquard, their motions and adjustments are successively described. The succeeding chapters are devoted to the various styles of harnesses and the processes of harness tying. Finally, detailed descriptions are given of card cutting, lacing, and repeating.

The method of numbering the pages, cuts, articles, etc. is such that each subject or part, when the subject is divided into two or more parts, is complete in itself; hence, in order to make the index intelligible, it was necessary to give each subject or part a number. This number is placed at the top of each page, on the headline, opposite the page number; and to distinguish it from the page number it is preceded by the printer's section mark (§). Consequently, a reference such as § 16, page 26, will be readily found by looking along the inside edges of the headlines until § 16 is found, and then through § 16 until page 26 is found.

INTERNATIONAL TEXTBOOK COMPANY

Digitized by Google

Digitized by Google

CONTENTS

	Section	Page
WOOLEN AND WORSTED CAM-LOOMS		
Construction of Cam-Looms	51	4
Principal Motions of Weaving	51	8
Auxiliary Motions of Weaving	51	31
Temples	51	44
Production	51	48
WOOLEN AND WORSTED FANCY LOOMS		
The Knowles Fancy Loom	52	3
Knowles Head-Motion	52	3
Harness-Evener Motion	52	15
Building Harness Chains	52	17
Box Motion	52	21
Multiplier	52	26
Timing the Box Motion	52	29
Leveling the Boxes	52	30
Building Box Chains	52	31
Picking Mechanisms	52	36
Take-Up Mechanisms	52	40
Brake Motions	52	48
Selvage Motions	52	51
Crompton Fancy Looms	53	1
Driving	53	3
Shedding Mechanism	53	4
Box Motion	53	14
Pick Disconnecting Device	53	28
Filling Stop-Motion	53	32
Protector Motion	53	33
Take-Up Motion	53	36
Let-Off Motion	53	40
Selvage Motion	53	42

Digitized by Google

WOOLEN AND WORSTED LOOM FIXING	*Section*	*Page*
Erecting and Starting Looms	55	4
Loom Mechanisms and Their Defects	55	8
Box Motion	55	13
Picking Motion	55	15
Filling Stop-Motion	55	21
Take-Up Motion	55	22
Let-Off Motion	55	22
General Loom Fixing	55	23
PLAIN LOOMS		
Parts of a Plain Loom	56	3
Principal Motions of a Loom	56	8
Auxiliary Motions of a Loom	56	30
Calculations	56	43
FIXING LOOMS		
Definitions	57	1
Erecting and Starting Looms	57	2
Keeping the Loom in Good Running Condition	57	18
Defects Caused Outside of Weave Room	57	28
The Loom Fixer	57	30
LOOM ATTACHMENTS		
Undercams for Other Than Two-Harness Work	58	1
Construction of Different Cams	58	3
Attachments for Three-, Four-, Five-, and Six-Harness Undercam Looms	58	13
Selvage Motions	58	20
Shedding Mechanism of a Loom	58	24
Side Cams	58	26
Continuous Take-Ups	58	28
AUTOMATIC LOOMS		
The Northrop	59	1
Filling-Changing Motions	59	9
Additional Attachments on Automatic Looms	59	19

Digitized by Google

AUTOMATIC LOOMS—*Continued*	*Section*	*Page*
Fixing	59	22
Cloth Defects	59	26
Other Types of Automatic Looms	59	28
DOBBIES		
Varieties of Sheds	60	2
Single-Cylinder Dobby	60	5
Double-Cylinder Dobby	60	18
Building Harness Chains for Dobbies	60	25
Fixing	60	27
Timing and Setting the Single-Cylinder Dobby	60	27
Timing and Setting the Double-Cylinder Dobby	60	32
Power and Speed	60	33
LENO ATTACHMENTS		
Leno Weaving on Single-Lift, or Close-Shed, Dobbies	61	3
Top Doups	61	20
Leno Weaving on Double-Lift, or Open-Shed, Dobbies	61	25
Fixing	61	35
Difference Between American and European Methods	61	37
BOX MOTIONS		
Crompton 4 × 1 Box Motion	62	2
Box-Chain Mechanism	62	13
Method of Building Box Chains	62	19
Fixing of Box Looms	62	24
Power and Speed	62	29
JACQUARDS		
Jacquard Construction	63	1
Single-Lift Jacquards	63	4
Double-Lift Jacquards	63	29
Fixing and Setting Jacquards	63	38
Harness Tying	64	1

Digitized by Google

JACQUARDS—*Continued*	*Section*	*Page*
Styles of Harness Ties	64	7
Building the Harnesses	64	12
Methods of Passing Harness Lines Through Comber Board	64	24
Casting Out	64	33
Card Cutting, Lacing, and Repeating	65	1
Card Cutting	65	4
Methods of Reading Designs	65	13
Method of Cutting a Set of Cards	65	17
Lacing	65	21
Repeating	65	35

Digitized by Google

WOOLEN AND WORSTED CAM-LOOMS

INTRODUCTION

1. Weaving is the process of interlacing yarn, threads, strips, or strands of various materials in such a manner as to produce cloth or fabrics of an allied nature. All weaving operations are performed on machines called **looms**, which vary in construction according to the kind of fabrics they produce. The strictest interpretation of the term weaving includes the production of all articles woven by a loom of any type, varying from the finest muslin to heavy blankets, from tape to sail cloth, and even including wire screening and fencing; but the generally accepted association of the word is with textile fabrics composed of wool, cotton, silk, or other fibrous materials. Fundamentally, weaving is a comparatively simple process, but the great variety of movements applied to a modern loom for varying the product and accelerating the operation has resulted in many varieties of complicated looms, while the actual work of the weaver has been greatly simplified by automatic attachments and various other improvements in weaving machinery. Like many other textile processes, weaving was formerly accomplished by hand, and even today the hand loom is an important factor in some branches of the industry in certain localities. The application of motive power to driving looms has, however, become almost universal and has led to many improvements in their construction.

For notice of copyright, see page immediately following the title page

Digitized by Google

2. Principle of Weaving.—Every woven fabric is composed of two systems of yarns—the *warp* and the *filling*. There may be two or more warps or two or more systems of filling. The majority of fabrics are, however, what are known as *single cloths* and are composed of one system of warp yarn and one system of filling yarn. The **warp** is that system of yarn that runs lengthwise of the fabric and consists of a large number of separate threads, or **ends.** The number of ends in the warp depends, of course, on the ends per inch in the cloth and the width of the fabric. Before being woven, the separate ends of the warp, which are of equal length and arranged parallel to each other in the form of a sheet of yarn, are wound tightly on a round wooden roll usually constructed with iron heads and journals. This roll constitutes a part of the loom and is known as the **loom beam** or simply the **beam.** In the process of weaving, the warp yarn is slowly unwound from the beam, which is placed at the back of the loom, while as the weaving progresses, the woven cloth is wound on a roll at the front of the loom known as the **cloth roll.** The **filling** is that system of threads that runs across the fabric from selvage to selvage and unlike the warp consists of a continuous thread or threads that are passed back and forth from one side of the cloth to the other and are interlaced with the warp. The filling is placed in the cloth 1 pick at a time by means of a moving part of the loom known as the **shuttle,** which travels back and forth across the loom from one shuttle box to the other. The filling is wound in the form of a bobbin or cop, which is placed on a spindle in the shuttle.

In order to produce a woven fabric each warp end is drawn through the eye of a **heddle** placed on any one of a number of wooden frames known as **harnesses.** These harnesses, which are carried in the center of the loom, are operated by a suitable mechanism so that any of them may be raised or lowered through the space of a few inches when desired. Since some of the harnesses are raised while others are lowered, a diamond-shaped opening, known as the **shed,** is made in the warp, through which the shuttle carrying

Digitized by Google

the filling is thrown. The shed then closes, after which a new shed is formed by the raising and lowering of other harnesses and the filling inserted as previously, thus interlacing the filling with the warp and forming a woven fabric. These two operations are known as **shedding** and **picking.** The shuttle in being thrown from one side of the loom to the other leaves the filling some distance from the edge, or, as it is technically known, the **fell** of the cloth. It is necessary, therefore, after the insertion of each pick, to push the filling forwards to the cloth that has already been woven. This operation is known as **beating up** and is accomplished by an oscillating portion of the loom called the **lay** that carries a grate-like arrangement of vertical wires known as the **reed,** through which the warp is passed. The three operations of shedding, picking, and beating up are known as the *principal motions* of weaving and are common to all types of looms. In weaving any fabric these three operations are repeated over and over again as the cloth is made pick by pick.

3. Other motions are applied to looms, but they are of the nature of *auxiliary motions* and are not typical of any principle of the weaving process. The chief auxiliary motions are: (1) The *let-off motion* for controlling the beam and letting the warp unwind as fast as the cloth is woven while it at all times keeps the proper tension on the warp; (2) the *take-up motion* for winding the cloth on the cloth roll as it is woven by the loom; (3) the *filling stop-motion* for automatically stopping the loom in case the filling breaks; (4) the *protector motion* for protecting the warp yarn from being broken by the lay and shuttle in case the latter for any reason remains in the shed when the lay moves forwards to beat up the filling; (5) the *selvage motion* for manipulating the selvage ends at each side of the warp in such a manner as to produce smooth and firm edges on the cloth.

Digitized by Google

CONSTRUCTION OF CAM-LOOMS

4. The simplest power loom employed for woolen and worsted fabrics is the **cam-loom**, so called because the raising and lowering of the harnesses to form the shed is accomplished by means of cams. A cam-loom suitable for weaving flannels, cassimeres, trouserings, or other goods requiring only one kind of filling and not more than eight harnesses is shown in Figs. 1 and 2, the former being a front view and the latter showing the loom as seen from the rear. The loom consists primarily of two side frames a, a, connected by girts and supporting the arch a_1; these parts are securely bolted together so that a strong and suitable support is made for the various mechanisms of the loom. The crank-shaft b extends entirely across the loom and is carried in two bearings securely fastened to the side frames. This shaft is so bent as to form two cranks, which are connected by pitman arms b_2, Fig. 8 (a), with the lay f. The lay is supported by the lay swords f_1 and when actuated by the crank-shaft moves backwards and forwards beating up each pick of filling as it is inserted in the cloth. A hand wheel b_1 is fastened to one end of the crank-shaft, so that the weaver may turn the crank-shaft of the loom by hand, as is often necessary. The bottom shaft c, which extends entirely across the loom, is located approximately under the crank-shaft and is supported by bearings bolted to the side frames of the loom; it carries two castings c_1 [see Fig. 8 (a)], one on each side of the loom. These castings carry iron rolls c_2 called **pick balls**, which acting through suitable mechanisms in a manner somewhat similar to cams, impart motion to the picker sticks d_2, d_3. The upper end of the picker stick imparts motion to a rawhide picker e_2 working freely on a spindle e_1 at the back of the shuttle box e, which is at the end of the lay. One end of the picker projects into the shuttle box e and imparts motion to the shuttle. As there are two shuttle boxes and a picking

Digitized by Google

Digitized by Google

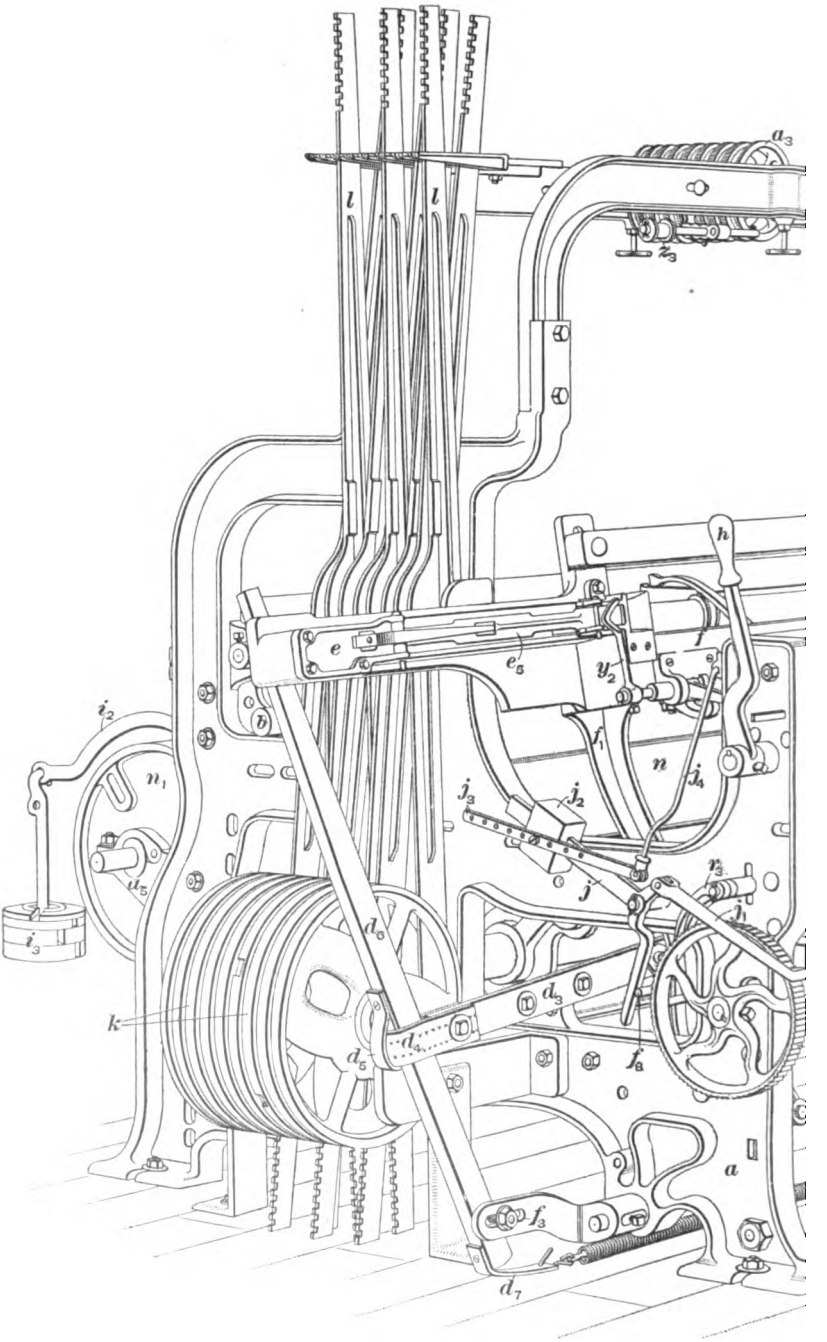

Digitized by Google

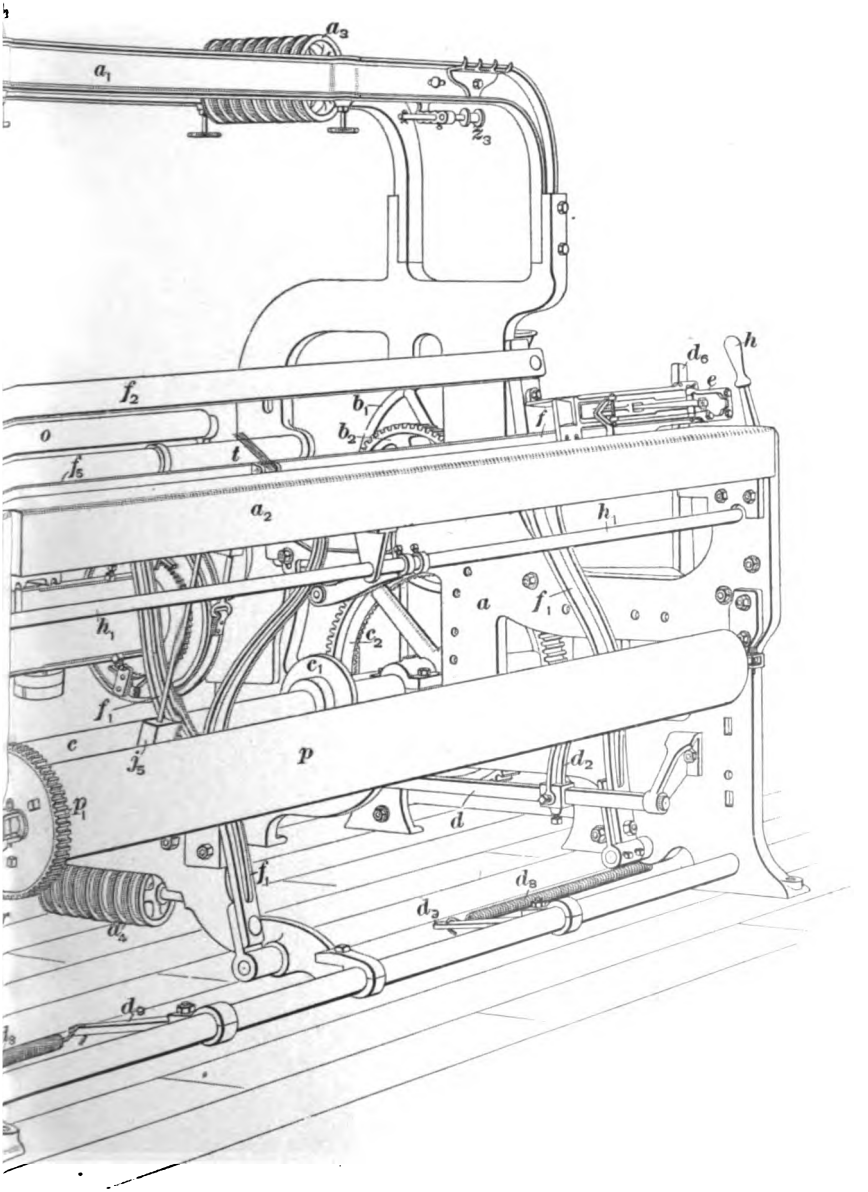

FIG. 1

Digitized by Google

Digitized by Google

Digitized by Google

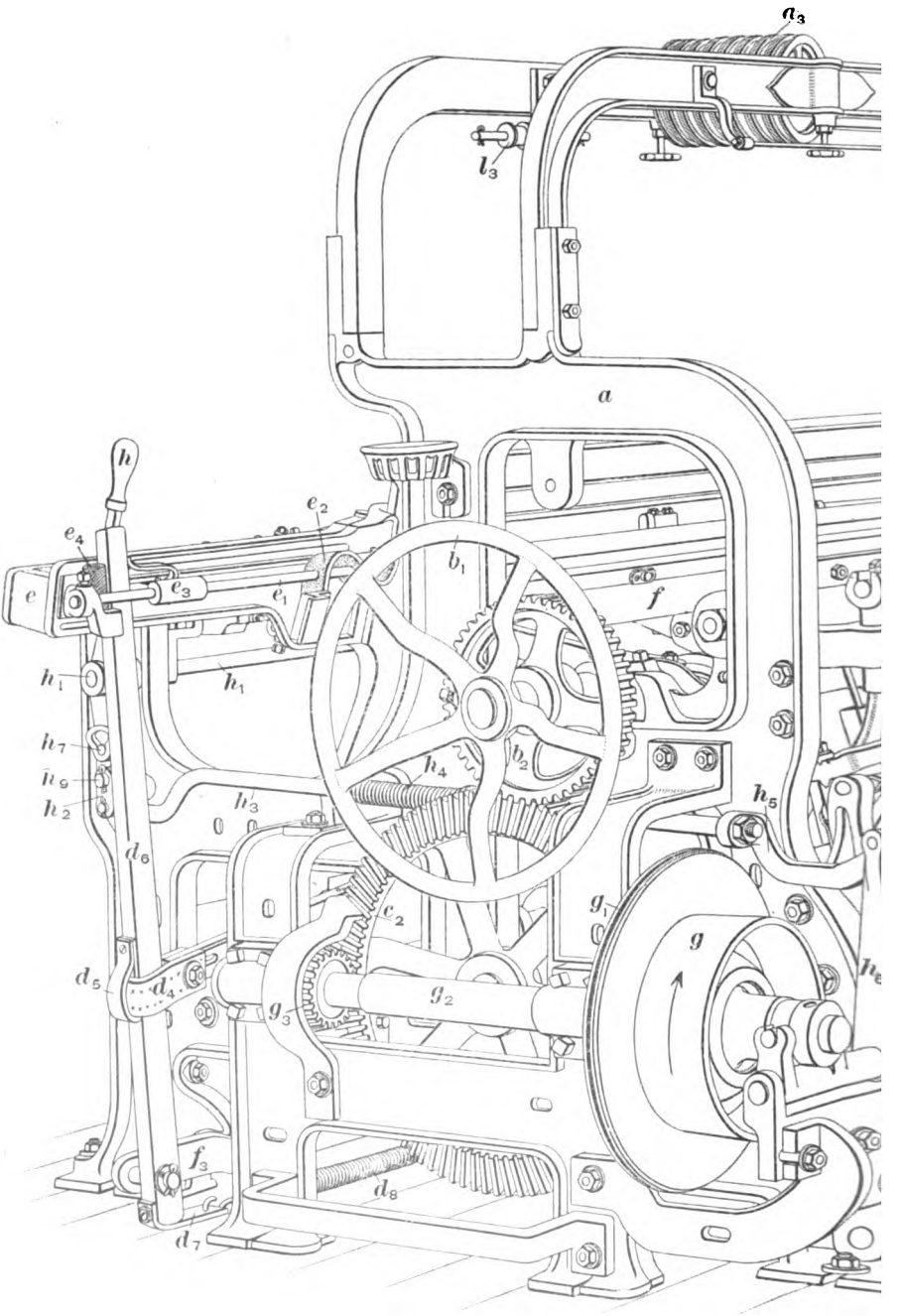

Digitized by Google

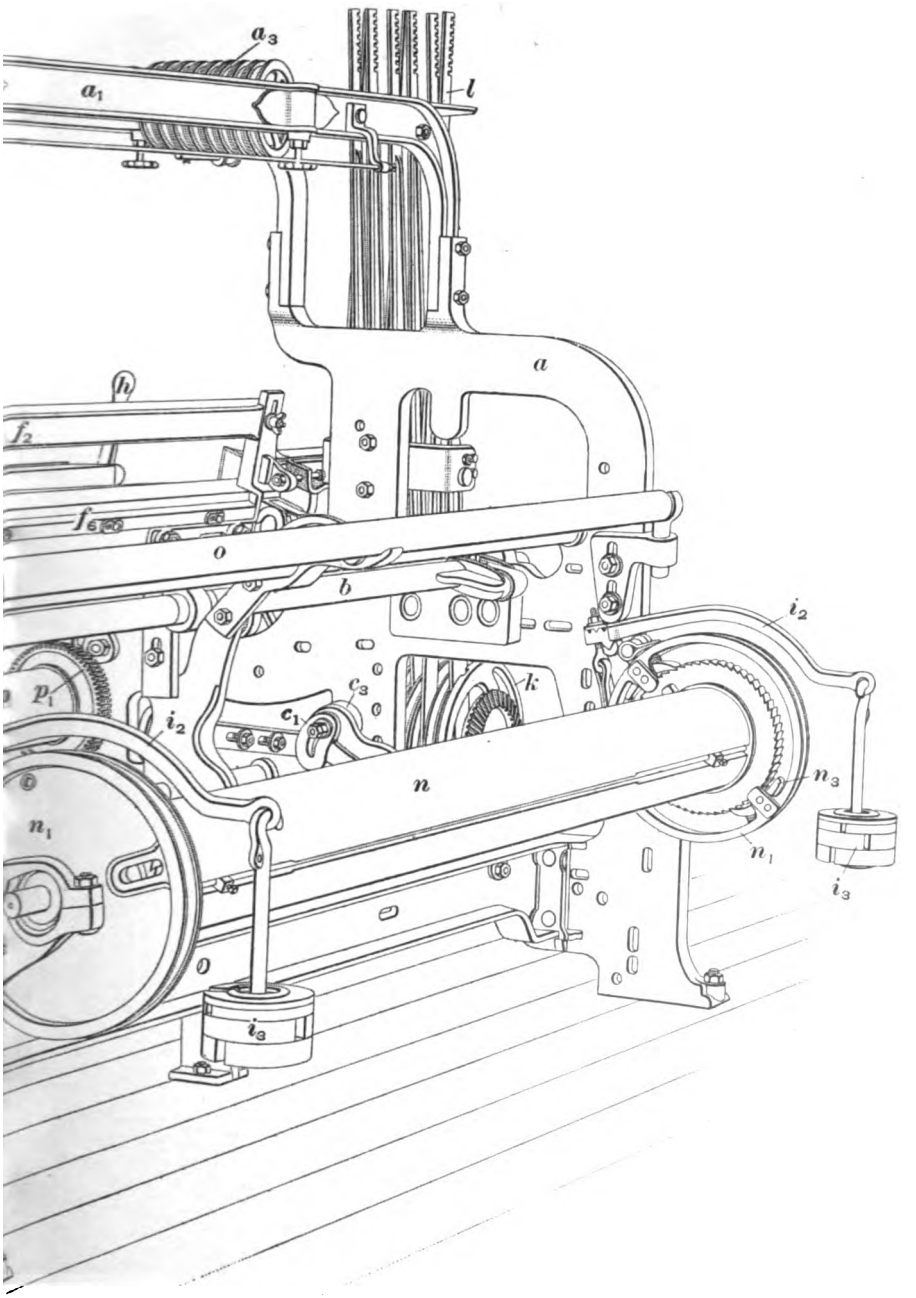

Digitized by Google

Digitized by Google

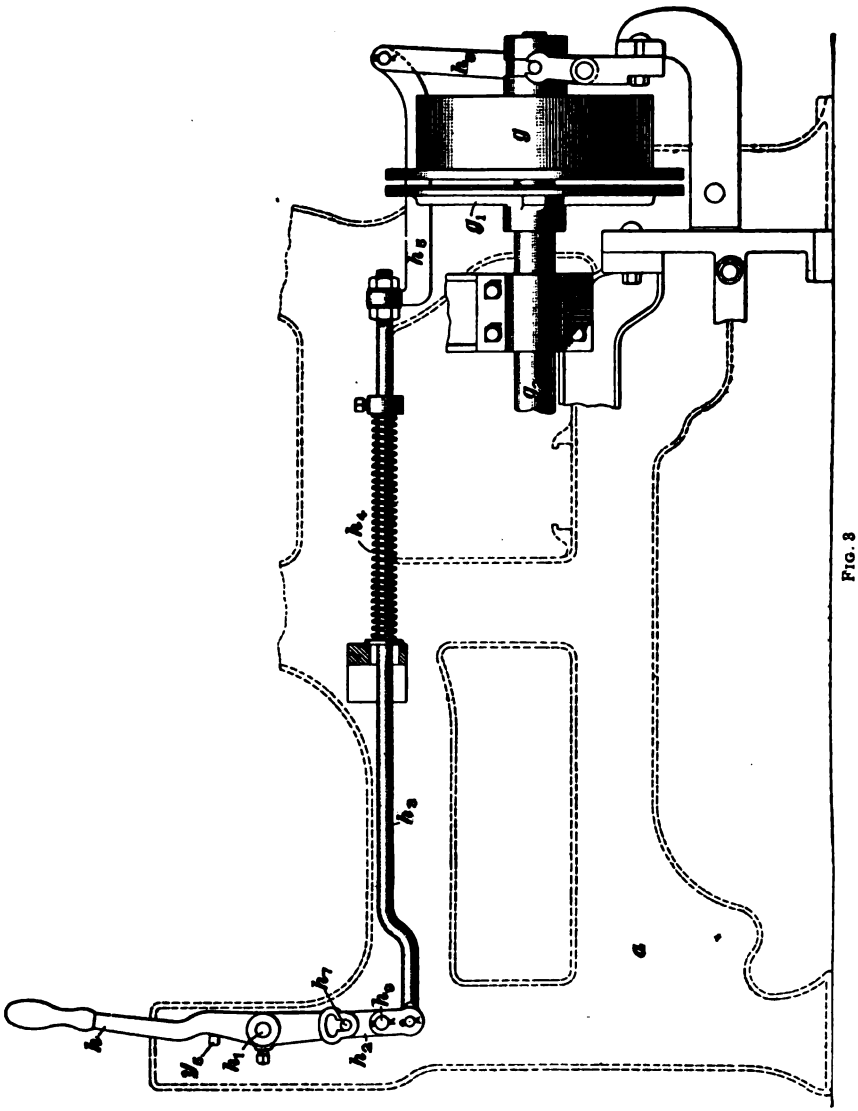

FIG. 3

Digitized by Google

motion on each side of the loom, the shuttle is thrown back and forth from one shuttle box to the other. The top of the lay, over which the shuttle travels in moving from one box to the other, is usually made of a thin strip of steel or hardwood f_1, and is known as the **race plate**, or **shuttle race**.

The shed, or opening in the warp, for the insertion of each pick of filling is formed by means of cams k placed on a shaft at the side of the loom and driven by means of bevel gears from the bottom shaft. These cams operate harness levers, or jacks, l that raise and lower the harnesses (not shown in Figs. 1 and 2) through which the warp is drawn, thus forming the sheds for the insertion of the filling. The loom beam n on which the warp is wound rests in bearings a_3 supported by the frame of the loom. The warp passes from the beam over the whip roll o, through the harnesses, which are connected to the shedding mechanism, and then through the reed (not shown), which is an arrangement of vertical wires supported at the bottom by the lay and at the top by the reed cap f_2. As fast as the cloth is woven it is drawn over the breast beam a_2 and wound on a cloth roll p by means of the take-up motion, which is operated from the lay by a mechanism imparting motion to the rachet r.

5. The driving gearing is as follows: Motion is imparted to the loom by means of a belt running on a self-oiling face-friction pulley g, Figs. 2 and 3, on the shaft g_2. Fastened to one end of the driving shaft g_2 is a twenty-two-tooth bevel-pinion gear g_3 meshing with a gear c_2 of ninety-six teeth set-screwed to the bottom shaft of the loom. The gear c_1 is of peculiar construction, having teeth arranged to mesh with the gear g_3 and also having teeth on its circumference meshing with the gear b_2 after the manner of an ordinary spur gear. The gear b_2 is fastened to the crank-shaft of the loom and has forty-eight teeth; since this is exactly one-half the number of the teeth in the gear c_2, the speed of the crank-shaft will consequently be twice that of the bottom shaft. The reason for this relative speed is that in making one revolution the bottom shaft inserts 2 picks into the cloth, and as

Digitized by Google

the lay must beat up each of these picks separately, the crank-shaft must make two revolutions while the bottom shaft is making one.

The shedding mechanism must always be so arranged that a shed will be made for each revolution of the crank-shaft. Looms in which the crank-shaft makes two revolutions to one of the bottom shaft are said to be geared two to one; some looms for special purposes are equally geared. Many looms have the driving pulley directly on the crank-shaft, but these are fast-speed looms. Where looms are run at slow speed, some reducing motion must be used so that the driving pulley may run at a sufficient speed to efficiently transmit the required power to the machine. The speed of a loom is always considered as the speed of the crank-shaft; therefore, when a loom is geared as shown in Fig. 2, in order to find the speed it is necessary to multiply the revolutions of the loom pulley by the teeth in the pinion gear and divide by the number of teeth in the crank-shaft gear: $\frac{220 \times 22}{48} = 100.83$. In this case 220 revolutions per minute of the loom pulley will place approximately 100 picks per minute in the cloth.

The friction driving pulley g, Fig. 3, is loose on the driving shaft g_s and, by means of a lever h_6 fitted with a yoke that engages with a groove cut in the hub of the pulley, may be forced in contact with the friction plate g_1, which is fastened to the shaft. The lever h_6 is controlled by either of the shipper handles h, h, which are setscrewed to a shaft h_1, extending across the loom. When the shipper handle is drawn forwards, the pin h_7 operates the lever h_8 that swings on the stud h_9 and draws forwards the rod h_3, which operates the casting h_5 attached to the lever h_6. A spring h_4 is so arranged as to hold the pin h_7 securely in the notch in the lever h_8 when the shipper handle is drawn forwards, so that the jar and vibration of the loom will not cause the pin to be released from its retaining notch. This spring also instantly disengages the friction in case the shipper handle of the loom is operated by any of the stop-motions that will be explained later. Looms are often equipped with tight-and-loose pulleys

Digitized by Google

instead of a friction, but the latter is to be preferred for heavy looms using wide belts, as by its use the constant shifting of the belt is avoided and at the same time the power is communicated to and removed from the loom in the least possible time. Friction pulleys are necessary also if a very short belt must be used.

PRINCIPAL MOTIONS OF WEAVING

SHEDDING MECHANISM

6. The harnesses through which the ends of the warp have been drawn must be connected to some mechanism by means of which certain of them may be raised and others lowered, so as to make a division or opening in the warp. Through the opening, or shed, thus formed, the shuttle is thrown and the pick of filling inserted. The relative position of the harnesses is then changed; some, or all, of those that were raised are lowered while others are raised, so that a new shed is formed, through which the shuttle is again thrown and another pick of filling inserted. The harnesses are raised and depressed in a definite order, so that a certain weave or method of interlacing the filling with the warp will be followed out; for instance, with the warp drawn through the harnesses in regular order from front to back, if all the odd-numbered harnesses are raised for one pick and all the even-numbered ones for the next pick, a plain weave will be formed in the cloth. In this case one pick will pass under all the odd-numbered ends and over all the even-numbered ends, while with the next pick the reverse will be true.

By arranging the lifting of the harnesses, therefore, various methods of interlacing the warp and filling so as to produce twilled or other effects may be obtained. Harness-shedding mechanisms can only be used when a large number of warp ends are raised and lowered in the same order, since all of the ends drawn in the heddles placed on a single harness must work alike. If only two harnesses are operated,

Digitized by Google

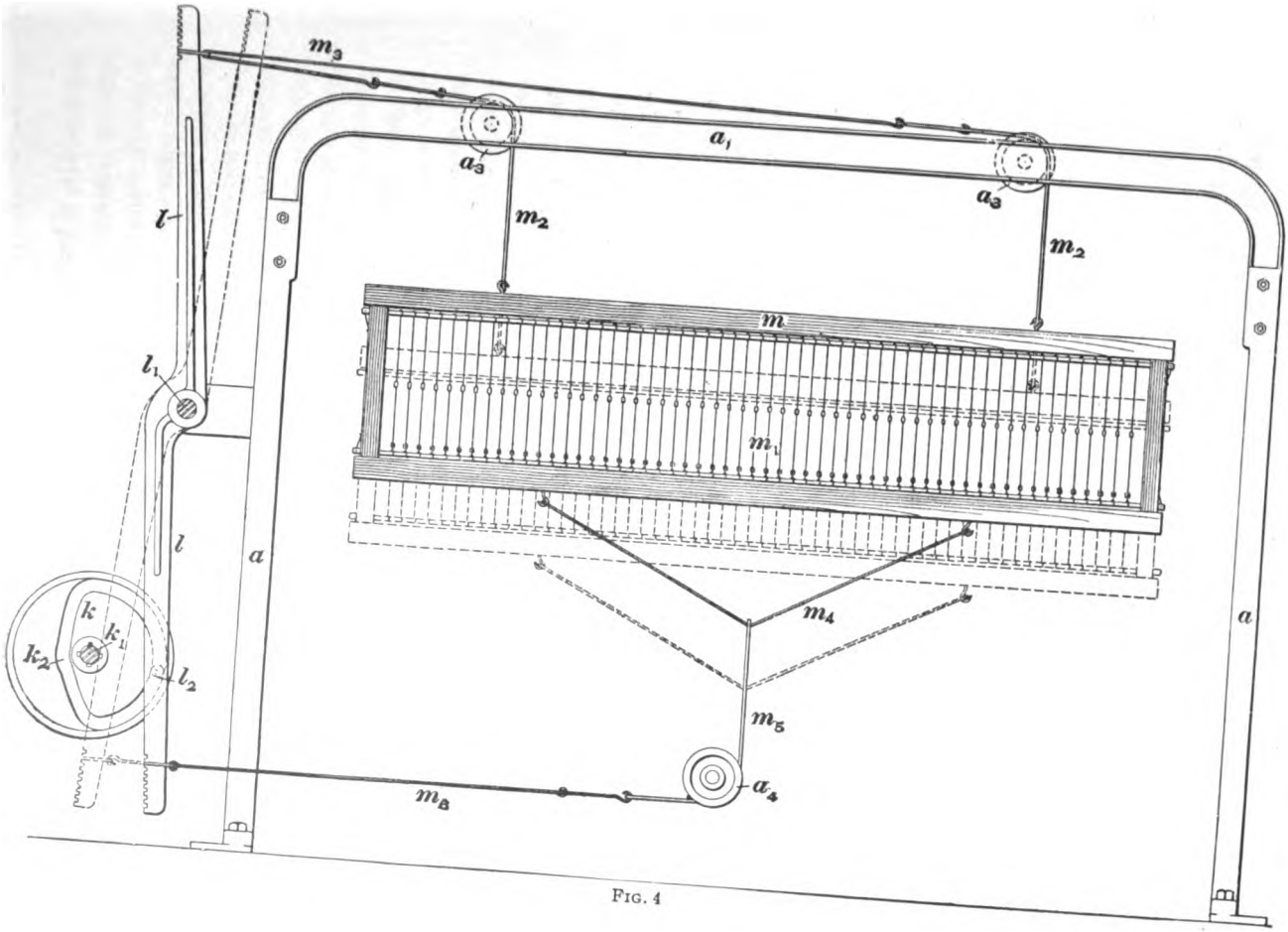

FIG. 4

Digitized by Google

there can be but two orders of raising and lowering the warp threads; if three harnesses are used, there may be three sets of warp threads raised and lowered independently of each other, and so on, the number of harnesses used always governing the number of ways in which it is possible to operate the warp ends.

7. Side-Cam Shedding Motion.—On cam-looms, the raising and lowering of the harnesses is accomplished by means of cams. These, if placed at one side of the loom, are known as **side cams**; but if placed under the harnesses, are known as an **under-cam motion.** Fig. 4 shows the usual arrangement of side cams on woolen looms. Each of the several harnesses m carries a number of wire heddles m_1 threaded on two heddle bars, one at the top and one at the bottom of the harness frame. Each end in the warp that is to be raised and lowered in the same manner as this particular harness is drawn through the eye of a heddle placed on the harness. The harness is attached by means of leather straps m_2, passing over sheaves a_2, a_3 and hooked wires m_3, to a small iron stirrup slipped over the upper end of the harness lever, or jack, l, which is movable on a fulcrum at l_1. The lower end of the jack is connected to the harness by means of a similar stirrup, a wire m_4, a strap m_5 passing around a sheave a_4, and a wire yoke m_6. Motion is imparted to the jack l and thus to the harness by means of a cam k attached to a rotating cam-shaft k_1. A cam-bowl l_2 on the jack works in the cam-course k_2 of the cam, and as the latter rotates, the lower end of the jack is forced inwards and drawn outwards and the harness m raised and lowered, thus raising and lowering the warp threads drawn through the heddles. By constructing the cam with a cam-course of proper shape, the harness may be made to move in any desired manner so that it will remain up or down while a given number of picks are being placed in the cloth. The position of the cam, jack, and harness when the latter is lowered, is shown in Fig. 4 by the dotted lines. In this illustration the connections of only one harness are shown,

Digitized by Google

the dotted lines simply showing the same harness in another position, but ordinarily cam-looms operate from two to eight harnesses, each with its corresponding jack, cam, etc.

The harness may be made to move through a greater distance by moving the stirrup toward the end of the jack by means of the notches in the ends of the latter. The harnesses that are farthest from the fell of the cloth should be allowed to move through a greater distance than those nearer to the cloth, in order that they may raise and depress the warp yarn at the same angle, so that a clear and open shed may be made. This is usually accomplished by stepping the stirrups in regular order from a low notch on the upper end of the front jack to a high notch on the jack operating the back harness. Care should be taken to place the stirrup at the bottom of the jack in the same relative notch as the top stirrup, so that each will be equidistant from the fulcrum of the jack; otherwise, the straps and wire connections to the harness will be strained and broken in shedding. The cams operating the back harnesses are also constructed so as to give a greater lift to the harness. The straps m_2, m_3 are perforated so that the harness may be hooked at any desired height in order to make the warp yarn just clear the race plate of the lay when the harness is in its lowest position, and so that the harness may be strapped tight or loose as is desired.

In Fig. 5, the passage of the warp n_4 from the warp beam n, over the whip roll o, through the heddles m_1 of the harnesses m, and over the breast beam a_2 to the cloth roll p is shown; this figure also illustrates how the shed is formed by the harnesses. It will be noticed that some of the harnesses are raised while others are lowered; consequently, the warp ends drawn through the heddles of the harnesses that are raised are also raised, while those drawn through the heddles of the harnesses that are lowered are also lowered. Through the opening thus formed in the shed, the shuttle s is thrown, traveling back and forth across the loom upon the lay f, which is supported by arms f_1 known as **lay swords.** As successive sheds are formed by raising and lowering other harnesses and the filling inserted in

Digitized by Google

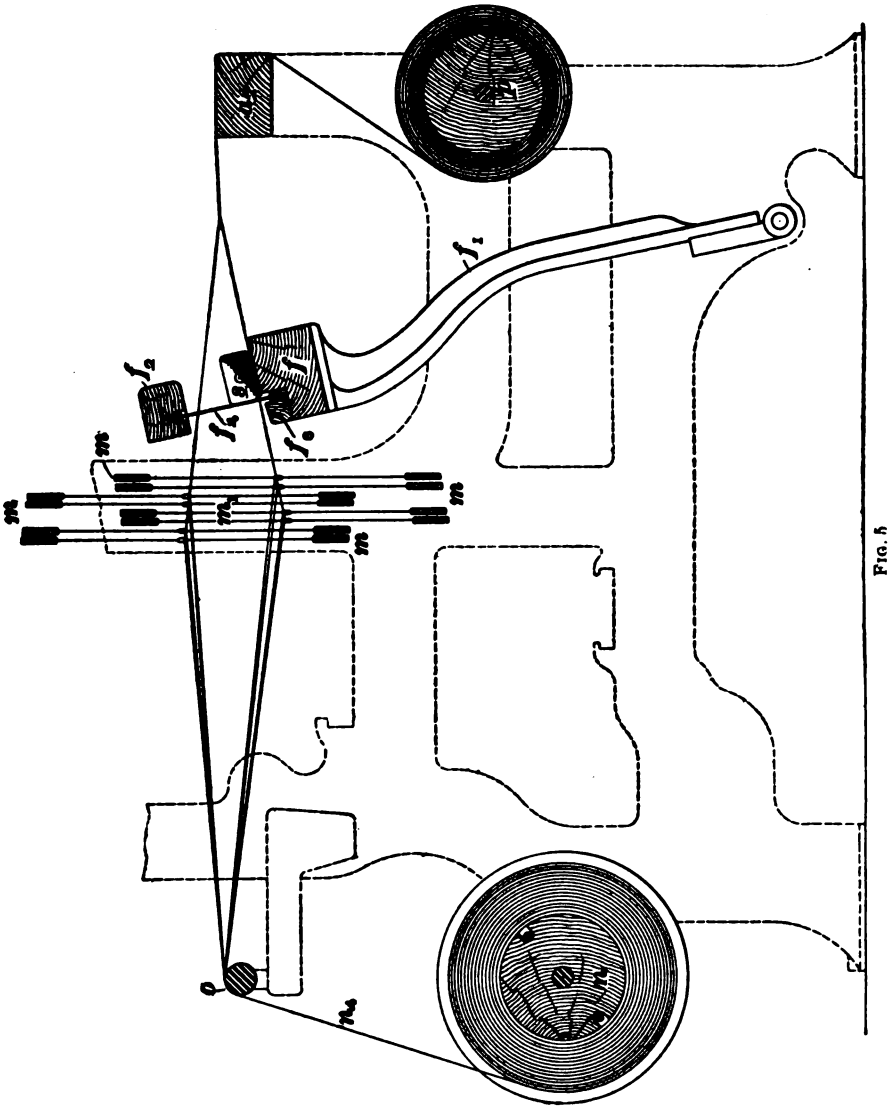

FIG. 5

Digitized by Google

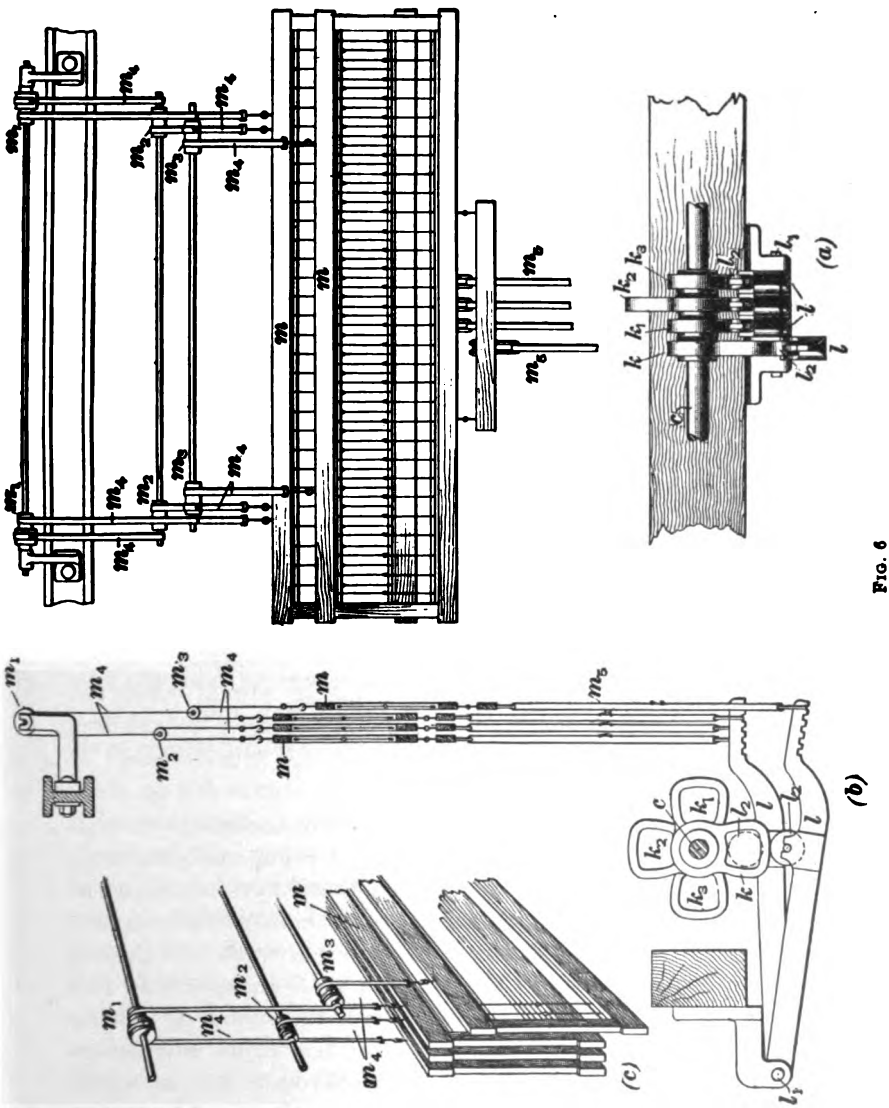

FIG. 6

Digitized by Google

these sheds to form the cloth, the warp n_4 is unwound, the yarn is drawn through the heddles, and the woven cloth is wound on the cloth roll p.

8. Under-Cam Motion.—The under-cam shedding motion is rarely applied to looms designed for woolen and worsted fabrics. Fig. 6, in which (*a*) is a front and (*b*) a side view, shows an under-cam motion for operating four harnesses and illustrates the principle involved in this method of shedding. Four cams k, k_1, k_2, k_3, each constructed to lower the harness for one shed and allow it to be raised for three consecutive sheds, are fastened to a rotating shaft c. They operate four levers, or treadles, l, the two not shown being hidden from view by the one shown raised. The treadles are fulcrumed at l_1 and attached to the harnesses m by means of straps m_4. The cam-bowl l_2 being in contact with the circumference of the cam results in the treadle and harness being lowered when that part of the cam farthest from the shaft comes in contact with the cam-bowl. The harnesses are, as is more clearly shown in the perspective view, Fig. 6 (*c*), so hung by straps m_4 from wooden rolls m_1, m_2, m_3 supported by the arch of the loom that when one harness is depressed its motion serves to raise the harness that was depressed on the previous pick, thus making a positive motion from cams that are really only partially positive in their action.

9. Construction of Cams.—Cam-shedding mechanisms are only adapted to weaves having comparatively simple interlacings, since each end that interlaces with the filling in a manner different from other ends requires a separate cam to operate the harness through which it is drawn. For instance, if a weave is complete on 5 ends, that is, if it contains 5 ends each interlacing with the filling differently from the other 4 ends, it will require five cams in order to raise and lower the five harnesses, through one of which each of these ends must be drawn so that each end will interlace with the filling according to the method indicated by the weave.

Digitized by Google

Cams may be constructed to so operate the harnesses that the warp ends controlled by them will be raised or depressed for any reasonable number of picks and in any order desired. The shaft on which the cams are placed is usually speeded so that it will make one revolution while the crank-shaft of the loom is making a number of revolutions equal to the number of picks in one repeat of the weave.

This is necessary because one revolution of the cam-shaft must make the sheds for each pick of the weave and the crank-shaft must move the lay forwards to beat up each of these picks separately. As the weaves usually woven on cam-looms are complete on the same number of ends and picks, it follows that the shaft on which the cams are placed makes one revolution while the crank-shaft makes as many revolutions as there are cams on the cam-shaft. For instance, if the cams are constructed and the loom adapted for a weave complete on 4 ends and 4 picks, four cams are necessary and the crank-shaft will make four revolutions while the cam-shaft is making one; if the weave requires six cams and there are 6 picks in one repeat of the weave, then the crank-shaft will make six revolutions to one of the cam-shaft, and so on. It should be distinctly understood that the number of cams is not actually the governing element, but the number of picks to one repeat of the weave; the number of cams simply serves as a guide when the weave is complete on the same number of ends as picks.

In constructing a harness cam, in order to find the correct shape of the cam-course for any desired motion of the harness, there are several important points that must be taken into consideration before any attempt is made to draw the cam. The diameter of the cam-shaft, of the hub of the cam, and of the cam-bowl must first be considered; then the throw of the cam must be determined; and finally the manner in which the harness is to be lifted should be considered. Suppose that it is desired to construct a cam to raise the harness for 2 picks and lower it for 2 picks, 4 picks constituting one repeat of the weave. The shaft on which this cam is to be placed is $1\frac{1}{2}$ inches in diameter; then the first

Digitized by Google

operation is to describe a circle a $1\frac{1}{2}$ inches in diameter (see Fig. 7). If the hub of this cam is to be $2\frac{1}{2}$ inches in diameter, another circle b must be described with the same center as the previous one but $2\frac{1}{2}$ inches in diameter. Suppose that the cam-bowl fastened to the harness lever is 1 inch in diameter. Another circle c must now be described

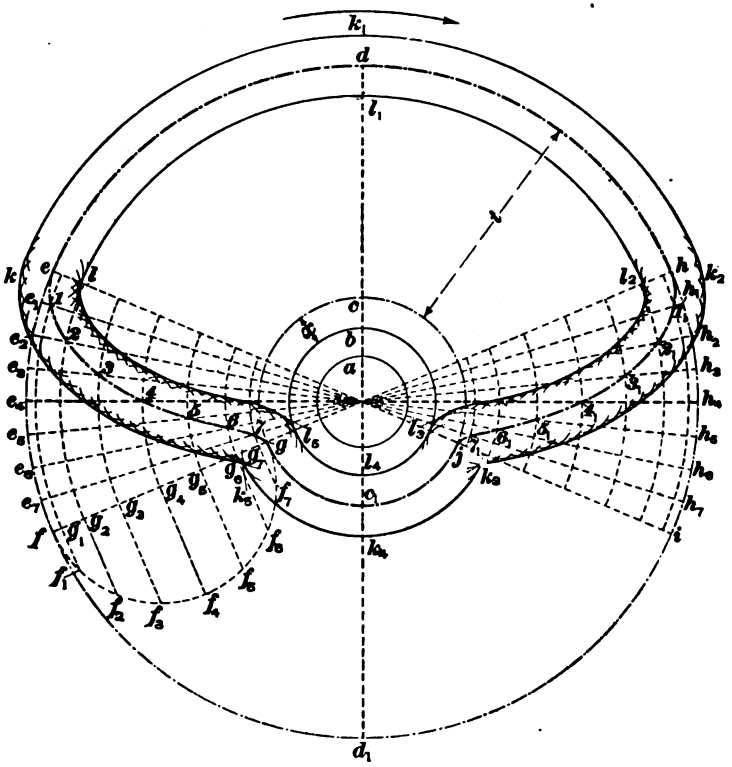

FIG. 7

using the same center and such a radius that the distance x between the circles b and c shall be equal to one-half the diameter of the cam-bowl, or $\frac{1}{2}$ inch. This circle represents the position of the center of the cam-bowl when it is nearest the hub of the cam and the harness is in its lowest position.

It is next necessary to determine the amount of throw that the cam shall have, and in this connection the required lift of

Digitized by Google

the harness and the leverage through which the cam is to act must be considered. Suppose that in this case it is desired to impart a vertical movement of 5 inches to the harness and that the cam is to operate through a harness jack after the manner shown in Fig. 4. If the distance from the fulcrum of the jack to the point where the harness strap is connected is 30 inches and the distance from the fulcrum of the jack to the center of the cam-bowl is 24 inches, the cam must have a throw of $\frac{5 \times 24}{30}$, or 4, inches from heel to toe in order to raise the harness 5 inches. Having found the throw of the cam, another circle is described with the same center and a radius of such magnitude that the distance t shall be 4 inches. This circle represents the path of the center of the cam-bowl when it is traversing that part of the cam farthest from the center and the harness is raised to its highest position. This cam is to be constructed for a weave complete on 4 picks and will consequently make only one revolution to every 4 picks placed in the cloth. The next operation, therefore, is to divide the circle representing the position of the center of the cam-bowl when it is farthest from the center of the shaft into four equal parts, as shown by the heavy dotted lines $d\,d_1$ and $h_4 e_4$. Each of these divisions represents the distance that the cam will turn during the time the crank-shaft of the loom is making one revolution and 1 pick of filling is being placed in the cloth; the shape and position of the cam-course, then, in any one of these divisions governs the action of the harness while that particular pick of filling is being inserted.

This cam is to be constructed so that the harness will remain raised for 2 consecutive picks and lowered for 2 picks; therefore, two of the divisions, say $e_4 d$ and $d\,h_4$, will be used while the harness is up, and two, $h_4 d_1$ and $d_1 e_4$, will be used while the harness is down. In the first case, the center of the cam-bowl will be moving along the circle d; and in the latter case, along the circle c_1. It is evident that some allowance must be made for the time consumed by the harness in passing from the bottom to the top shed and vice versa, as it would be obviously impossible for the cam-bowl to pass

Digitized by Google

instantaneously from its lowest to its highest position or vice versa; nor would such a motion be desirable, as the harness should be moved as smoothly and easily as possible. One-half a pick is usually allowed for each change of the harness, although sometimes more is allowed so as to make the movement of the harness as slow as possible consistent with having it change in time. In this case, this equals one-half of one of the four divisions into which the cam was divided. One-half of this distance is laid off on each side of the lines indicating where the harness is to pass from one shed to the other. Thus, if the cam is rotating in the direction indicated by the arrow, the distance $i\,h$ is equal to one-half of 1 pick and one-half of this is laid off on each side of the radius passing to point h_4, indicating the distance the cam will turn while the harness is being raised. During this period the center of the cam-bowl must move from j to h. In the same way, the distance $e\,f$, which is also equal to $\frac{1}{2}$ pick, represents the distance that the cam will move while the harness is passing from the top to the bottom shed. During this period the center of the cam-bowl must move from e to g.

In rising and falling, the harness should start to move slowly, its speed gradually increasing until the center of the shed is reached, when it should uniformly decrease until the motion is completed. If the cam is shaped to move the harness in this manner, a minimum of strain is placed on the warp yarn when it is at its greatest tension, that is, when the harness is up or down, and at the same time the change is accomplished in a minimum of time by moving the harness quickly in the center of the shed, while the yarn is not subjected to so great a strain. This motion is obtained by dividing the arcs $e\,f$ and $h\,i$ into an arbitrary number of equal parts, say eight. From the points $e_1, e_2, e_3, e_4, e_5, e_6, e_7$ and $h_1, h_2, h_3, h_4, h_5, h_6, h_7$ thus obtained radii are drawn to the center of the cam. With a radius equal to one-half the throw of the cam and a center on any convenient radii of the circle, describe a semicircle $f\,f_4\,g$, one end of which shall lie in the circle $d\,d_1$ and the other in the circle $c\,c_1$. Divide this semicircle into the same number of equal parts in which the arcs $e\,f$

Digitized by Google

and $h\,i$ were divided. From the points $f_1, f_2, f_3, f_4, f_5, f_6, f_7$ draw lines $f_1g_1, f_2g_2, f_3g_3, f_4g_4, f_5g_5, f_6g_6, f_7g_7$, perpendicular to the radius on which the center of the semicircle was located, in this case the line $f\,g$. With the center of the cam as a center, strike arcs through the points $g_1, g_2, g_3, g_4, g_5, g_6, g_7$ cutting the lines drawn from the equal divisions of the arcs $e\,f$ and $h\,i$. Through the points $1, 2, 3, 4, 5, 6, 7$ obtained by the intersection of these arcs with the radii draw a smooth curve connecting e and g. In the same way, connect h and j with a line drawn through $1_1, 2_1, 3_1, 4_1, 5_1, 6_1, 7_1$. The shape of the cam is now practically determined, the heavy dot-and-dash line e–d–h–j–c_1–g representing the path that the center of the cam-bowl must travel during one revolution of the cam, or 4 picks of the loom. To find the actual shape of the cam-course with which the cam must be cast, or cut, it is only necessary to take a radius equal to that of the cam-bowl and with successive centers on the path of the center of the cam-bowl strike arcs on each side as shown. Lines k–k_1–k_2–k_3–k_4–k_5 and l–l_1–l_2–l_3–l_4–l_5 drawn tangent to these arcs show the exact shape of the cam-course required to move the cam-bowl so that its center will constantly follow the line e–d–h–j–c_1–g.

10. Considering the action of the cam, suppose that the center of the cam-bowl is at j and that the cam rotates as shown by the arrow; the cam-bowl moves from j to h with a variable motion, raising the harness from the bottom to the top shed. At the point 4_1 the greatest speed is attained, and at this point the harness is exactly in the center of the shed. The cam-bowl then moves from h through d to e. Since this portion of the path is the true arc of a circle having the center of the cam as a center, the harness remains stationary at the top shed. This portion of the cam is known as the **dwell of the cam** and allows the shuttle to be thrown through the shed without interfering with the warp. In passing from e to g the harness is lowered in exactly the same manner as it was raised and, while the cam-bowl passes from g through c_1 to j, the harness is stationary at the bottom shed, this part of

Digitized by Google

the cam being also a dwell. With careful observation of the method employed in constructing the cam in Fig. 7, no difficulty should be experienced in constructing a set of cams for any weave. It should be noted that if a cam is to be constructed for an under-cam motion, it is unnecessary to determine the line k–k_1–k_2–k_3–k_4–k_5. Cams for the harnesses farthest from the fell of the cloth should be made with a somewhat greater throw than those for the front harness, the part of the cam nearest the hub being made smaller, so that the harness will fall lower, and the outer diameter of the cam-course being made greater, so that the harness will rise higher, in order that the yarn drawn through this harness shall be raised and lowered at the same angle as that drawn through the front harness.

The cams in Fig. 1 are so constructed that in one revolution they raise the harness for 2 picks, lower it for 2, raise it for 2, and lower it for 2, being really what might be termed *double cams*. The cam-shaft makes one revolution to eight of the crank-shaft or one to four of the bottom shaft.

11. Setting Harness Cams.—A set of harness cams may be fastened together or to the cam-shaft so that the harnesses will be raised in any desired order. For example, suppose that a set of cams is constructed so that each cam will lift the harness for 1 pick and lower it for 3 picks. These cams may be fastened to the cam-shaft in such a relative position that on the first pick the first harness will be raised, on the second pick the second harness will be raised, on the third pick the third harness, and on the fourth pick the fourth harness, thus forming a regular twill in the cloth; or they may be put together so that on the first pick the first harness will be raised, on the second pick the second, on the third pick the fourth, and on the fourth the third, thus forming a broken twill in the fabric; or any other order, such as four, three, two, one, in which four numbers can be arranged may be used.

When the cams are placed together, they should be so arranged that the change part of one cam that raises the

Digitized by Google

harness will overlap the change part of the cam or cams that are lowering a harness exactly one-half, so that the harness that is rising will pass the harness that is being lowered exactly in the center of the shed. In order that this may be accurately accomplished, the cam-shaft is key-seated and fitted with a solid spline, while each cam has as many keyways cut in its hub as there are cams on the shaft, as shown in Fig. 4. Thus, the cams may be arranged to raise the harnesses in any desired order, but as the keyways are cut in the proper place it is impossible to fasten the cams to the shaft in a wrong position.

12. Timing the Harness Cams.—After the cams are placed together so as to raise the harnesses in the required order, they must be timed so that the shed will be opened and closed at the proper periods. The lay is first brought forwards until the reed nearly reaches the fell of the cloth; then the bevel gear on the bottom shaft is loosened and the cam-shaft turned until the harness or harnesses that are rising are exactly level with the harness or harnesses that are being lowered. When the cam-shaft is in this position, the bevel gear should be securely fastened to the bottom shaft again. Instead of noting when the changing harnesses are level, it serves the purpose as well and is sometimes more convenient and more accurate in case the harnesses are not properly leveled, to note the position of the jacks and tighten the bevel gear on the bottom shaft when the cam-shaft has been moved so that two or more jacks moving in opposite directions are even with each other. The position in which the lay is placed depends on whether an early or late shed is desired; ordinarily, the changing harnesses should be level when the reed is about 1 inch from the fell of the cloth, but if an early shed is desired, this distance is increased, whereas if it is desired to have the shed late, the lay is placed closer to the fell of the cloth when the cam-shaft is set. The earlier the shed, the greater the strain on the warp, since the distance that the filling is forced through a crossed shed is then greater; that is, after the changing

Digitized by Google

harnesses have passed each other, the shed is crossed on the pick of filling, which, in being forced to the fell of the cloth, encounters greater resistance from the warp; hence, if the pick must be moved a greater distance after the shed crosses before it reaches the fell of the cloth, the strain on the warp yarn is increased. By making the shed close later, this strain is reduced, and if the changing harnesses were not level until the reed reached the fell of the cloth, it would be eliminated.

13. Regulating the Shed.—When the harnesses are properly timed, the loom should be turned over by hand until the shed is open to its widest extent. When it is said that a loom is turned over by hand it is meant that the weaver operates the loom by hand. Each harness that is lowered should now be hooked to the harness straps so that the yarn will just barely clear the race plate of the lay. The loom should be turned over 1 pick at a time until all of the harnesses have been so regulated. Before this is done it is important to see that the stirrups are properly stepped on the harness jacks, so that the one connected to the front harness will be in the bottom notch and the one for the last harness in the top notch of the upper half of the jack, with the others uniformly graded between. This method of stepping the stirrups is subject to modifications, as, for instance, in cases where fewer harnesses are used than there are jacks in the loom, but in all cases the harnesses should be so connected as to give an even and clear shed. The harness should be strapped to the bottom of the jack in the same relative position and strapped neither too tight nor too loose, but with just enough tension to guard against lost motion or the straining of the straps. If a harness is strapped too high, the yarn will not lie close enough to the race plate and the shuttle is liable to be thrown from the loom or at least to travel from one box to the other with a crooked motion, which should be avoided in a well-running loom. If a harness is strapped too low, so that the yarn presses on the race plate, the yarn will be chafed and broken

Digitized by Google

by the action of the lay in moving forwards and backwards. Care should be taken to have each harness strapped to the jack so that all the warp yarn will be lowered to exactly the same position relative to the race plate. It should be noticed also whether the yarn is higher on one side of the loom than on the other.

PICKING MOTION

14. Picking, or the operation of throwing the shuttle through the shed with the filling, is one of the most important motions of weaving. The picking motion is somewhat different from any other mechanism of the loom and is a motion in which a considerable amount of force is exerted in a comparatively short space of time; this is necessary in order that sufficient momentum may be imparted to the shuttle to carry it across the loom from one shuttle box to the other. At the same time a straight, easy, and smooth motion should be given to the shuttle, since if the shuttle travels in a jerky or crooked manner the best results are not obtained. There are several styles of picking motions applied to power looms, but on woolen and worsted looms the one known as the **ball and shoe picking motion** is generally used. The usual arrangement of the ball and shoe pick is shown in Fig. 8 (*a*) and (*b*), of which the former is a sectional view of the mechanism, while the latter shows the appearance from the rear of the loom. A casting c_1 securely fastened to the bottom shaft c carries on a stud at its extremity an iron roller c_2 known as a **pick ball.** As the bottom shaft rotates, the pick ball comes in contact with a shoe d_1 fastened to the picking shaft d, which is generally rectangular in section except where it is round so as to be carried in bearings at the front and back of the loom. A pick arm d_2 is also securely fastened to the picking shaft, and by means of the sweep stick d_3 attached to the pick arm with a stud and a leather or cloth lug strap d_4 that encircles the picker stick d_5 and is bolted to the sweep stick, any movement of the pick arm may be communicated to the picker stick. The lug strap is supported by a small leather

Digitized by Google

loop d_4 attached to the picker stick with a small screw. The picker stick is fulcrumed on a stud fastened to a casting f_3, which in turn is fastened to a short rocker-shaft to which the lay sword f_7 is also attached. This allows the picker stick to have a movement in unison with the lay as well as the motion that is imparted to it for throwing the shuttle.

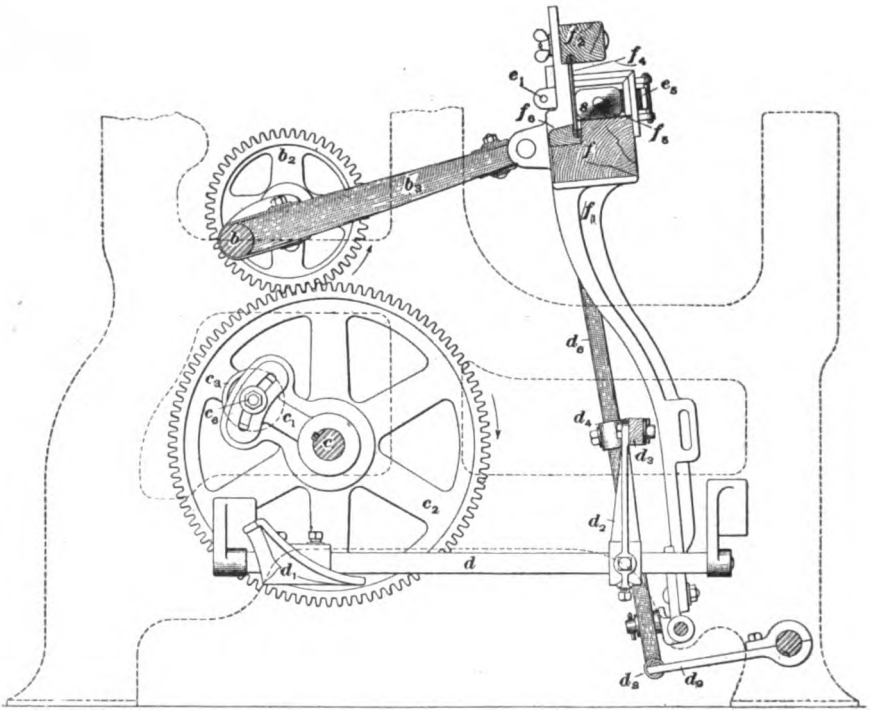

(c)

FIG. 8

At the top, the picker stick is attached to a rawhide picker e_3 by a strap e_4 or else is passed through a hole in the picker. The picker is free to slide back and forth on a spindle e_1 placed at the back of the shuttle box and projects into the box so that it engages the shuttle s. Fig. 8 (c) is a perspective view of a rawhide picker and shows the method of attaching it to the picker stick and picker spindle.

Digitized by Google

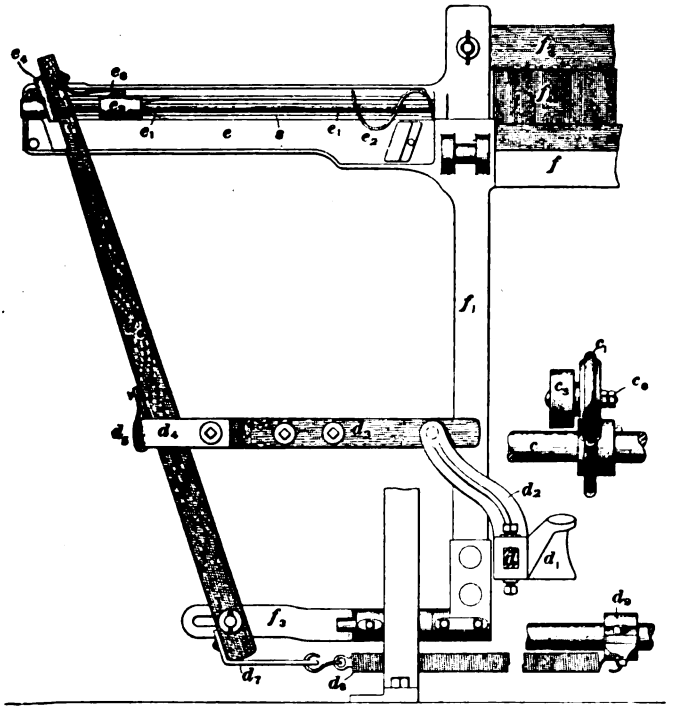

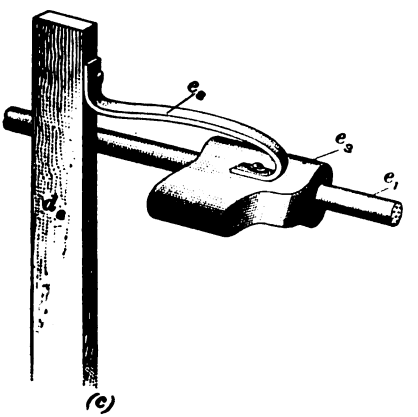

FIG. 8

Digitized by Google

Motion is imparted to the shuttle as follows: The picking shoe is so shaped that when struck by the revolving pick ball it will be forced downwards, thus imparting a partial rotary motion to the picking shaft. This motion throws the pick arm toward the center of the loom, thus drawing the sweep stick in and swinging the picker stick on its fulcrum. The picker stick drives the picker along its spindle, and as the picker presses against the shuttle the latter is thrown across the loom. These movements are, of course, accomplished with considerable speed and force, owing to the shape of the picking shoe and the rapid movement of the pick ball. A piece of leather strap e_8 is generally placed on the picker spindle for a buffer, to prevent the picker from being damaged at the end of its forward throw by striking the casting in which the picker spindle is fastened. After the shuttle has been thrown from the box, the picker stick is drawn back by means of a spring d_8 that is attached at one end to a leather strap d_7 screwed to the heel of the picker stick and at the other to an adjustable casting d_9, by means of which the tension of the spring can be regulated. To prevent the picker stick from being damaged by striking the end of the box when it is drawn back, and to act as a buffer to the picker when it is struck by the shuttle reentering the box, a roll of cloth e_4 is generally placed in the end of the shuttle box. The pick balls at both ends of the shaft c are set diametrically opposite each other, and as the picking motion is duplicated on the other side of the loom, the shuttle is thrown back and forth across the loom through each shed made by the shedding mechanism, thus interlacing the filling with the warp.

15. Timing the Picking Motion.—To time the picking motion the loom should be turned over until it is on the top center; that is, with the cranks vertically upwards. The nuts c_4 that fasten the pick ball c_2 to the casting c_1 should then be loosened and the pick-ball stud moved forwards or backwards in the slot until the picker stick just starts to move, and tightened in that position. If the loom is so

Digitized by Google

arranged that it picks first from one side and then from the other, as in the case of the loom under consideration, it should be turned over 1 pick before setting the picking motion on the other side.

16. Shuttles.—The shuttle that carries the pick of filling through the shed is usually made of some close-grained hardwood, such as apple, Southern dogwood, persimmon, etc. The wood should be reasonably heavy and well seasoned so that the shuttle will not warp or crack after it is turned. Extremely heavy wood is not so desirable as that of medium weight, while light, soft, or coarse-grained wood is totally unsuitable. The shuttle is shaped as shown in Fig. 9, being conical at each end and hollowed

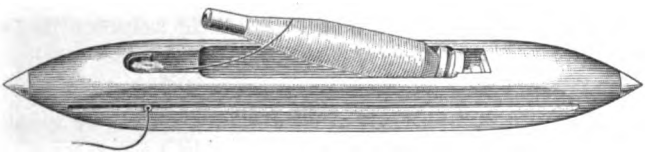

FIG. 9

in the center so as to receive the bobbin of filling yarn. At each end a metal tip is inserted to protect the shuttle when striking the picker and to present a smooth point to the yarn so that it will not break out the warp while passing through the shed. The shape of the shuttle is of great importance, since it must move across the loom in as nearly a straight line as possible so that it will not fly out.

It should be of a width and length depending on the shuttle box of the loom for which it is intended and should be provided with a suitable spindle for holding the bobbin of yarn. This spindle should be so arranged that it may be raised through an arc of about 30° so that empty bobbins may be removed and replaced with full ones.

When in the shuttle, the spindle should be held firmly by a flat steel spring, so that it cannot rise automatically. At the front end of the shuttle an iron or porcelain pot-eye is inserted, through which the filling is drawn from the bobbin. A groove in the side of the shuttle prevents its cutting the

Digitized by Google

filling by rubbing it against those parts of the shuttle box with which the shuttle comes in contact. In the front end of the shuttle near the eye a $\frac{1}{4}$-inch hole should be bored straight through the bottom of the shuttle. A small bunch of yarn drawn through this hole until the filling will just run through the loose ends serves as a brush, or friction, on the filling, and these prevent its running off the bobbin too freely. This bunch of yarn should be cut off smoothly on the bottom of the shuttle.

BEATING UP

17. The third and last of the principal movements of weaving is known as **beating up.** As the shuttle is thrown through the shed it leaves a pick of filling between the warp threads but some distance from the fell of the cloth; it is therefore necessary to push the filling up to the cloth that has been previously woven. This is performed by means of the lay, Fig. 10 (*a*) and (*b*), which has an oscillating motion and carries the reed, through which the warp ends are drawn. The lay consists of a heavy beam of wood *f* supported by the lay swords f_1, which are generally fulcrumed on a rocker-shaft extending entirely across the loom near the floor, but which in some looms are fulcrumed on shorter studs. Generally there are two lay swords, one on each side of the loom just inside the side frames, but on broad looms three are often used for the sake of the extra support afforded the lay. The top of the lay is generally faced with a piece of steel f_2 known as the race plate or shuttle race, but on light looms the race plate may be only a strip of hardwood. The race plate should be so beveled that when the lay is in the position farthest from the fell of the cloth it will be parallel to the bottom shed; that is, to the warp yarn passing to the fell of the cloth from the harnesses that are down. The oscillating motion of the lay is imparted to it by the crank-shaft of the loom. This shaft is bent so as to form two cranks just inside the frames of the loom and in line with the lay swords. The cranks are connected to the lay by wooden

Digitized by Google

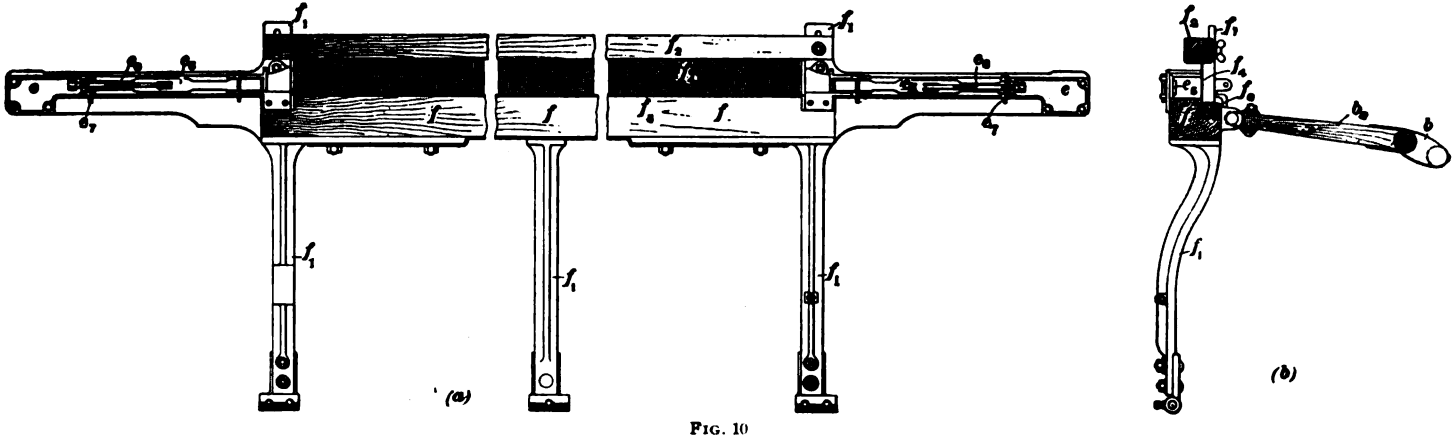

FIG. 10

Digitized by Google

pitman arms *b*, fastened by means of iron straps encircling the cranks and the connection on the lay sword. By means of these connections the rotary motion of the crank-shaft imparts a forward and backward, or oscillating, motion to the lay.

18. Reed.—The reed *f*, is an arrangement of vertical flat steel wires spaced a given distance apart and securely fastened at the top and bottom by two strips of wood bound together with a waxed cord, as shown in Fig. 11. The space between two wires is known as a **dent.** Reeds are made with any desired number of dents per inch, according to the requirements of the cloth that is to be woven. The reed has three important functions: (1) It separates the ends of the warp and distributes them evenly throughout the entire width of the fabric. (2) It beats the filling up to the fell of the cloth after each pick has been inserted, being attached to the oscillating lay. (3) It forms a rest for the shuttle in passing through the shed and in conjunction with the race plate guides it from one box to the other. When placed in the lay the lower edge of the reed rests in a groove and is securely fastened by means of a strip of wood *f*, that is firmly bolted against it, as shown in Fig. 10 (*b*). The top of the reed rests in a groove in the reed cap *f*, that is bolted to extensions of the lay swords.

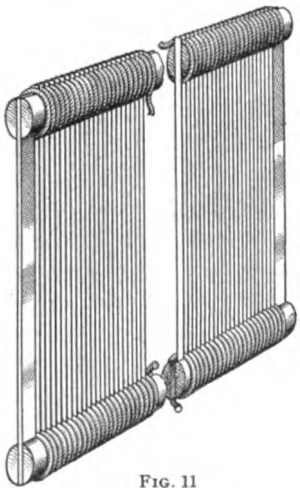

FIG. 11

19. Shuttle Boxes.—The shuttle boxes, as will be seen in Fig. 10 (*a*) and (*b*), are simply extensions of the lay at each side of the loom, forming receptacles for the shuttle during the time that the latter is at rest. In Fig. 12 a perspective view of a shuttle box is shown. The bottom of the shuttle box is a continuation of the race plate, while the back of the box should conform to the line of the reed.

Digitized by Google

The bottom and back of the box are of course stationary, but the front of the box consists of a movable piece of metal, e_6, known as the **binder**, which is pivoted on a pin e_7 at the front of the box and is so shaped as to gradually check the speed of the shuttle as it enters the box; a flat steel

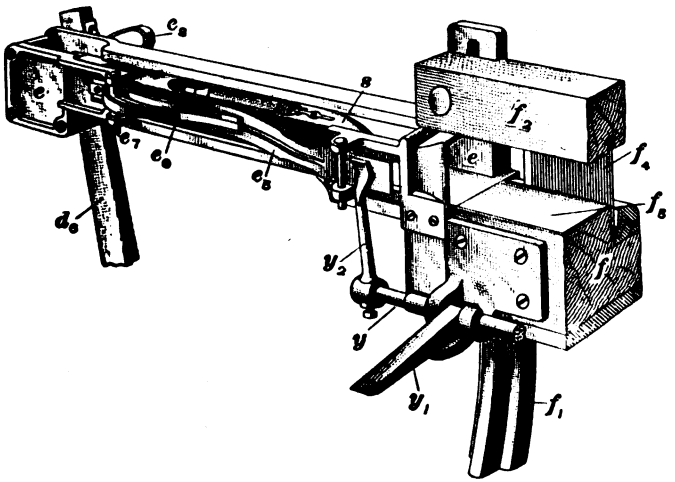

FIG. 12

spring e_6 presses the binder against the shuttle with sufficient force to prevent its rebounding from the box. The best results are obtained if the binder is so shaped as to be in contact with the whole of the flat part of the face of the shuttle. The binder should not have a sharp swell, since in that case the shoulder of the shuttle will become worn by striking it constantly, nor will the shuttle be checked in the best manner.

AUXILIARY MOTIONS OF WEAVING

LET-OFF MOTION

20. The object of the **let-off motion** is to allow the warp to be unwound from the beam as fast as the cloth is woven and yet at all times keep a proper tension on the warp yarn. There are two kinds of let-off mechanism commonly applied to power looms—the *friction let-off*,

Digitized by Google

which is applied to the great majority of woolen and worsted looms and also to a large extent to cotton looms, and the *automatic let-off motion*, which is more generally applied to looms for weaving cotton goods than to those used for

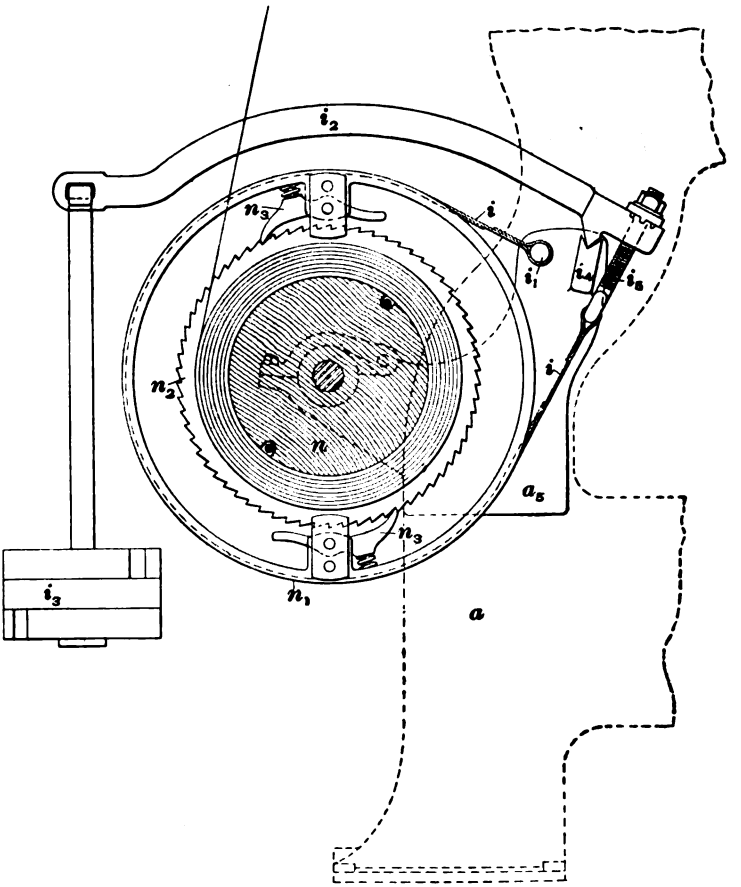

FIG. 13

weaving woolen and worsted fabrics and consequently needs no further mention.

Fig. 13 is an illustration of the type of friction let-off most commonly applied to woolen looms. The warp is wound on

Digitized by Google

the loom beam n, which is constructed with two slightly flanged beam heads n_1. The beam rests in supports a_8 at the back of the loom on journals cast on the beam heads instead of on the shaft of the beam, so that the beam will always turn true, even if the shaft of the beam has become bent through accident or misuse. The necessary tension of the warp is obtained by applying friction to the beam heads, which is accomplished by means of steel bands i fastened to studs i_1.

These bands pass entirely around the beam, resting in the recessed circumference of the beam heads, and are attached at the other end to a lever i_3 fulcrumed on a knife edge at i_4. Any amount of friction may be placed on the beam, and consequently any degree of tension on the warp, by hanging suitable weights i_5 on the ends of the levers i_3. A leather strap is generally riveted to the inside of each steel friction band in order to make the let-off more even and uniform. If there is no leather strap on the friction band, a strip of cloth should be wound several times around the beam head between the band and the beam. The height of the lever i_3 may be adjusted by means of a threaded bolt i_6 and nut attached to the end of the friction band. This is necessary if the lever touches the beam head.

21. Ratchet Beam Head.—The beam head shown in Fig. 13 and applied to the loom beams commonly used for woolen and worsted looms is constructed as follows: Ratchets n_2 are securely fastened to the ends of the beam by iron rods running clear through the beam and by lugs embedded in the wood. The beam head, on which the friction band of the let-off motion works, is loose on the shaft of the beam but is held from turning by means of two pawls n_3 fastened to the beam head and engaging with the ratchet on the beam. These pawls prevent the beam from turning forwards and unwinding the warp without turning the beam head and operating the friction; but should the weaver desire to turn the warp back after picking out or for any other reason, the loom beam may be readily turned without

Digitized by Google

lifting the weights on the let-off, the pawls taking up the required number of teeth in the ratchets. The warp may be slackened by raising the pawls from contact with the ratchets.

TAKE-UP MOTION

22. The object of the **take-up motion** is to wind the cloth over the breast beam and on to the cloth roll as fast as the filling is inserted and the cloth woven. On looms of the type under description, the conditional take-up is often used. In any take-up motion, the speed at which the cloth is drawn over the breast beam governs the number of picks per inch that are placed in the cloth; the greater the speed, the fewer the picks per inch, and vice versa. In the type of take-up motion known as the **conditional**, the number of picks per inch in the cloth depends on the tension of the warp in weaving, which is governed by the amount of friction on the let-off motion and by the position and amount of weight on the take-up motion.

The take-up motion applied to the cam-loom shown in Fig. 1 is of the conditional type, the mechanism being as follows (see Fig. 14): An elbow lever j is fulcrumed on a stud j_6 fastened to the frame of the loom; one arm of this elbow lever carries a sliding weight j_5, while the other arm rests against a pin f_6 fastened to the lay sword f_1 of the loom. Attached to this elbow lever is a pawl j_1 so shaped at one end as to engage with the ratchet r, which is fastened to a short shaft carried in a bearing on the frame of the loom. On the other end of this short shaft is fastened a small gear r_1 that engages with a gear r_2, which, in turn, engages with a gear p_1 on the cloth roll p of the loom, around which the woven fabric is wound. As the lay moves backwards, the pin f_6 on the lay sword will move the lever j backwards, thus raising the weight j_5 and forcing the pawl j_1 forwards, so that it will take up a tooth on the ratchet r; as the lay moves forwards, the pin f_6 moves from the arm of the lever and the weight tends to return the lever j to its former position, but since the pawl has taken up a tooth on the ratchet, in so doing it must turn the ratchet and wind the cloth on

Digitized by Google

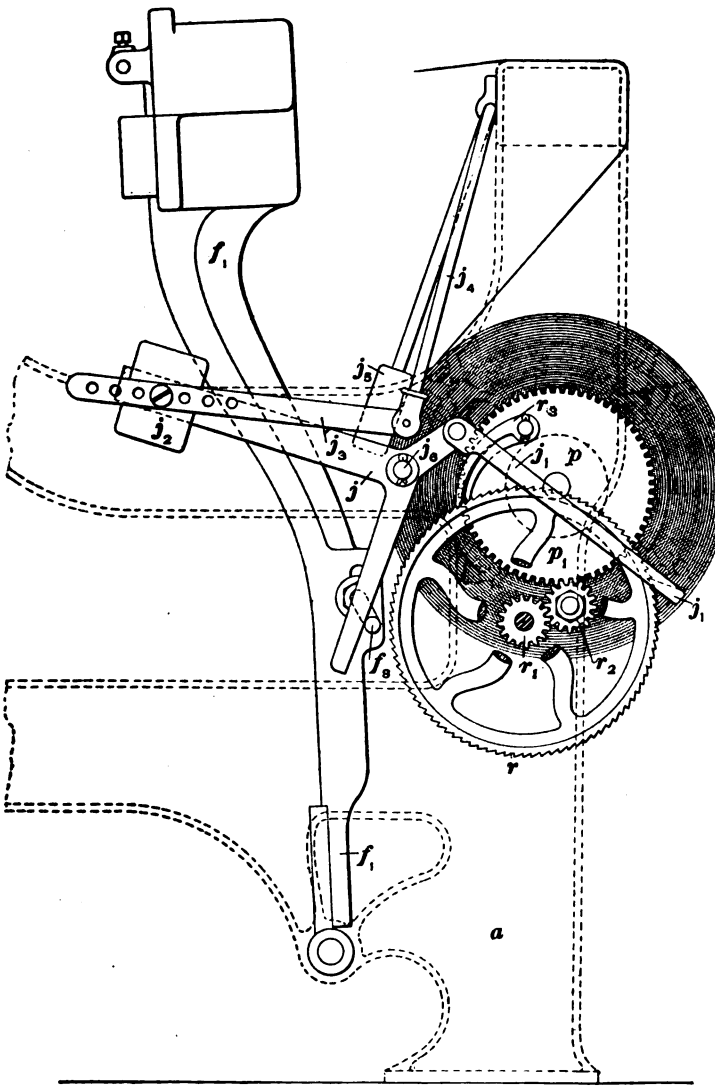

FIG. 14

Digitized by Google

the cloth roll. By this means, the cloth is kept at a constant tension. As more cloth is woven, the weight will drop; but when it has fallen a sufficient distance for the lever to come in contact with the pin f_4 it will be raised again by the pin and the pawl will take up one or more teeth in the ratchet. A stationary, or set, pawl r_4 on a stud in the frame of the loom engages with the teeth of the ratchet and prevents the tension of the cloth from pulling the ratchet around in the opposite direction while the pawl is taking up more teeth. This is a double pawl so constructed that one part will rest half way between two teeth when the other part is engaging a tooth; by this means the ratchet is held from turning back if it is moved forwards the distance of one-half tooth. The weight j_3 slides on an arm of the lever j and is held in position by means of the rod j_2, to which it is pinned. This rod is connected with a bent rod j_1 to which a weight or pad j_4 resting on the cloth wound on the cloth roll is attached. The object of this mechanism is to gradually force the weight toward the end of the lever j as the roll of cloth grows in diameter, since when the cloth roll is of a small diameter less power is required to keep the cloth at the same tension than when the cloth roll grows larger and the tension of the cloth is acting on a roll of greater diameter. With a small roll the weight j_3 will be close to the fulcrum j_5 of the lever j, but when a large quantity of cloth is wound around the roll the weight will assume a position at the end of the lever, as shown in Fig. 14.

The number of picks per inch in the cloth must be regulated by experiment; if more picks per inch are desired a greater tension will be required on the warp, but if less picks are required the tension of the warp must be reduced. The tension is regulated by the let-off motion, more weights on the friction producing greater tension of the warp, and vice versa. The position of the weight j_3 also governs the number of picks per inch to a certain extent, since if it is pinned to the rod j_2 in a hole near the end of the rod it will exert a greater strain on the cloth roll than if pinned to the rod in a hole nearer the fulcrum of the lever j.

Digitized by Google

FILLING STOP-MOTION

23. The object of the **filling stop-motion** is to stop the loom if the filling breaks or becomes exhausted; were it not for this motion the loom would continue to run without filling being inserted in the warp until this was observed by the weaver. The type of filling stop-motion applied to woolen and worsted looms operates in the center of the lay midway between the shuttle boxes; it is therefore known as the **center stop-motion** to distinguish it from a stop-motion applied to cotton looms, which operates at one side of the lay between the cloth and the shuttle box.

The Knowles center stop-motion is illustrated in Fig. 15 (*a*) and (*b*), which are views of the mechanism as seen from each end of the lay. A casting f_6 fastened to the lay carries a four-pronged filling fork f so swiveled as to rise and fall in a vertical plane. Directly under the filling fork a deep slot is cut in the lay, in which the fork freely falls when a pick of filling is not in the shed to support it. A dagger socket f_4 carrying a dagger f_3 is swiveled on a part of the same casting as the filling fork and is connected to it by means of a rod f_1. A casting a_6 bolted to the breast beam of the loom carries at its extremity a curved plate w, on which the dagger f_3 rests and is held by a weak spring f_4 that tends to make it follow the curve of the plate as the lay oscillates. When the lay moves back, the plate raises the dagger f_3, which in turn operates the rod f_1 and raises the fork f so that the shuttle may pass underneath it. If the shuttle leaves a pick of filling in the shed, the fork will be prevented from entering the groove in the lay, and as the latter moves forwards the dagger f_3 will be held from the plate w and will pass over the tumbler u, so that the loom will continue to run. Should the filling be absent, however, the fork will enter the groove, and as the lay comes forwards the dagger f_3 will follow the curve of the plate until it comes in contact with the end of the tumbler u. The force of the dagger striking the tumbler presses the latter forwards and downwards, and a pin u_1 attached to it forces down the tumbler finger h_6,

Digitized by Google

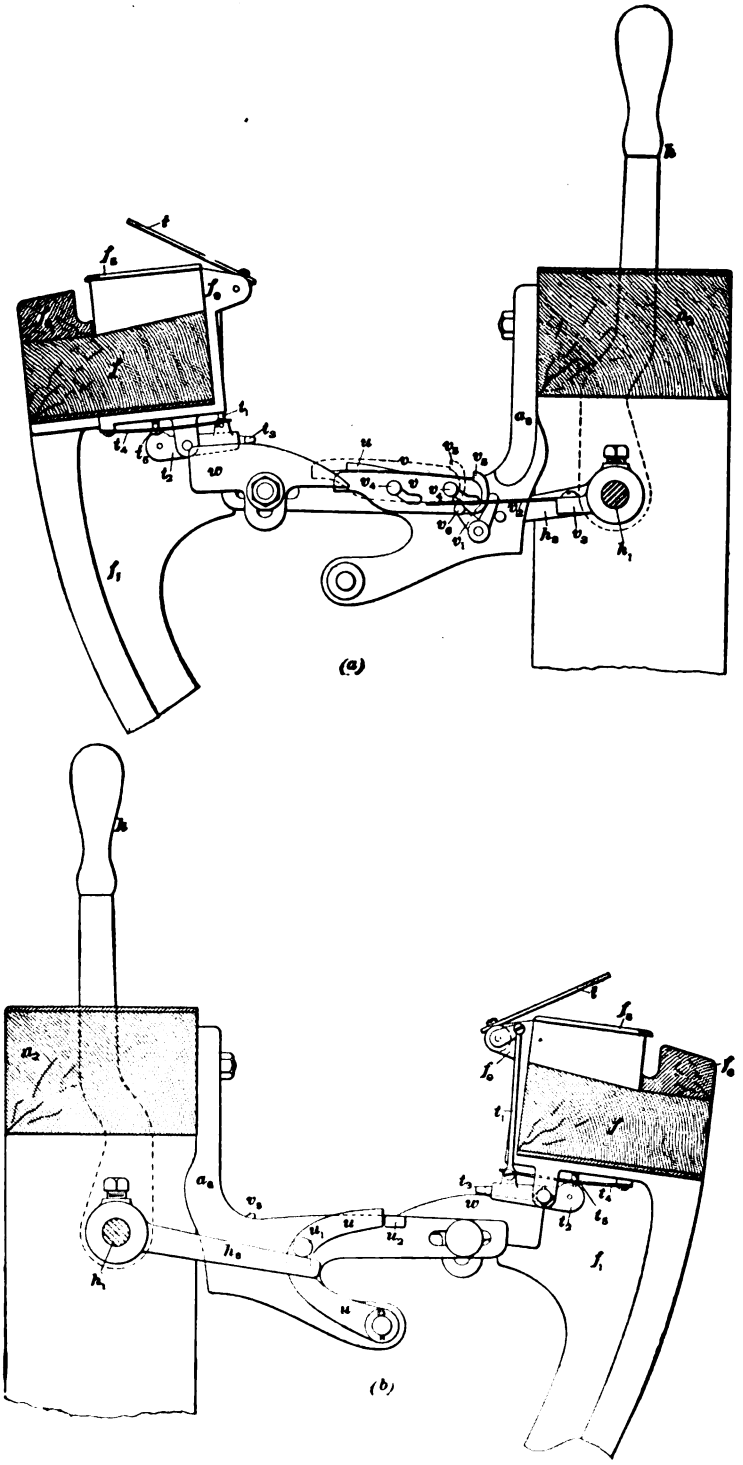

FIG. 15

Digitized by Google

which is setscrewed to the shipper shaft h_1, thus producing a sufficient rotary motion of the shaft to disengage the shipper handle from its notch and allow the loom to stop.

When the loom is stopped and the lay turned back by the weaver, the filling is apt to get from beneath the filling fork, and when the loom is started again, if a special device were not provided, there would be nothing to prevent the dagger from coming in contact with the tumbler and stopping the loom on the first pick. This would also occur on the first pick of the loom, before any filling was inserted in the shed. The device for preventing this consists of a sliding shield v fastened loosely to the casting a_6 by means of pins v_4 that engage with slots cut diagonally in the shield, so that when the latter is pushed forwards it will rise and assume the position indicated by the dotted lines. The shield is pushed forwards by means of a flat spring v_3 attached to a casting v_2 setscrewed to the shipper shaft h_1. As the shipper shaft is turned when the loom stops, this spring forces down a pin v_4 on the shield tumbler v_1, which in turn pushes the shield v into the position shown by the dotted lines. As the lay moves forwards on the first pick, the dagger t_3 will therefore clear the tumbler u and slide over the top of the shield, even if no filling is under the fork t. A projection v_5 on the shield is engaged by the dagger after it has passed the end of the tumbler and the shield is forced back into position, so that the stop-motion will operate if the filling is absent on any pick after the first.

24. Setting and Adjusting the Filling Stop-Motion.—The curved plate w should be adjusted by loosening the bolt that fastens it to the casting a_6 and setting it in such a position that when the lay is at the limit of its backward movement the filling fork t will clear the shuttle by $\frac{3}{16}$ inch. The forward end of the curved plate should be adjusted so that the dagger will just touch the top of the casting a_6 before coming in contact with the tumbler u. This space should not be too great, for in this case the dagger is liable to rebound and miss the end of the tumbler.

Digitized by Google

The spring t_4 should be adjusted by means of a screw t_5 so that it will exert only sufficient pressure to cause the dagger t_3 to follow the cam and engage the tumbler. The tension of this spring should not be great enough to cause the filling to sink into the lay, as this is liable to make kinks in the filling. With the belt off the loom or the connections of the shipper handle with the friction pulley disconnected, the shipper handle should be thrown on and the casting h_4 raised until the tumbler just comes in contact with the projection u_3 on the casting a_4. It should be setscrewed in this position, but care should be taken not to have the connection too tight, or the loom is liable to be jarred off; that is, the vibration of the loom will cause the shipper handle to slip from its retaining notch and stop the loom. When the shipper handle is thrown on, the casting v_3 should be loosened and turned until the pressure of the spring v_4 is just sufficient to raise the shield v to the limit of its movement; the casting should then be tightened in this position.

PROTECTOR MOTION

25. If for any reason the shuttle fails to travel completely across the race plate and remains in the shed, it is evident that as the lay moves forwards the shuttle will be trapped in the shed and the pressure of the lay against it will result in the warp ends being broken out. Not only is the shuttle liable to be stopped in the center of the shed, but sometimes it will fail to be properly boxed and the rear end will project into the shed so that the lay in beating up will break the ends of the warp at the edge of the cloth. Whenever either of these conditions occurs it is known as a *smash*, and it is the object of the **protector motion** to prevent such smashes. A rod y, Fig. 16 (a) and (b), known as the *protector rod*, is supported by bearings fastened to the lay f and has setscrewed at each end a finger y_3 that presses against the binder e_3 of the shuttle box. Two daggers y_1 are also secured to the protector rod just in front of the lay swords; they are designed to engage with the grooved ends

Digitized by Google

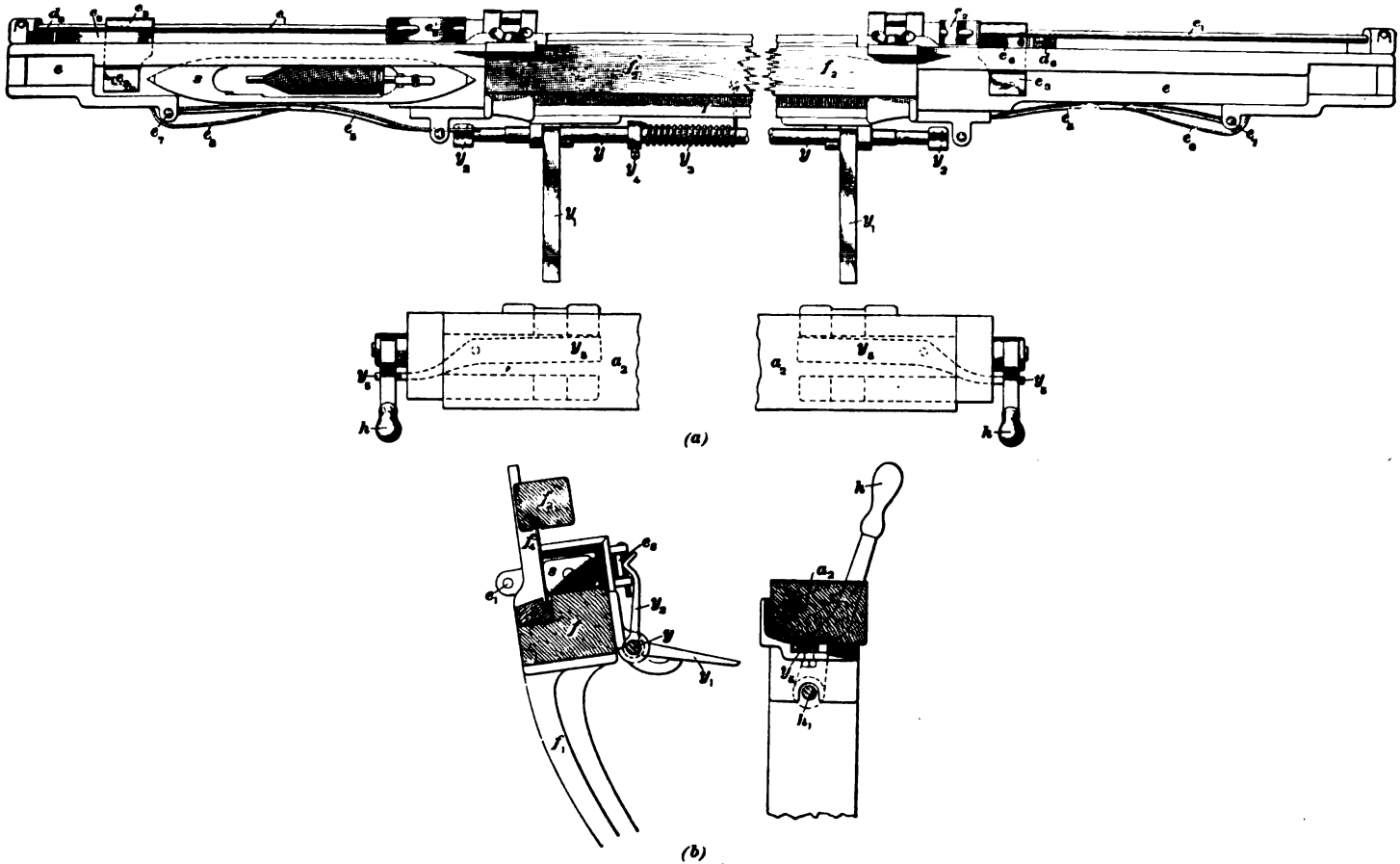

(a)

(b)

FIG. 16

Digitized by Google

of the levers y_5, the other ends of which are in contact with the shipper handles h of the loom. A spring y_3 fastened to the lay and to a casting y_4 setscrewed to the protector rod tends to keep the fingers y_2 constantly pressed against the binders, and the daggers y_1 in a raised position. When the shuttle is properly boxed, it will press the binder e_5 outwards, in so doing moving the finger y_2 through a distance sufficient to impart a slight rotary motion to the protector rod y, so that the dagger y_1 will just clear the grooved end of the lever y_5. If, however, the shuttle fails to reach the box or fails to enter the box far enough to press out the binder, the fingers, rod, and daggers will remain undisturbed, so that the latter will remain in a raised position, and as the lay comes forwards, they will engagé with the levers y_5, which in turn will force the shipper from its retaining notch and stop the loom, the daggers at the same time holding the lay so far from the fell of the cloth that it will not be able to break the warp ends by driving the shuttle against them. Blocks of rubber are often placed in the rear of the levers y_5 to cushion the blow of the daggers and thus prevent breaking any of the parts of the loom. When the shuttle is again placed in the box, all the parts resume their normal position and the loom is ready to run.

26. Setting the Protector Motion.—When setting the protector motion, it should first be noticed if the daggers are in line with each other; that is, if both are fastened to the protector rod in the same relative position. Then the shuttle should be placed well in the box and the finger on the protector rod adjusted so that the daggers will pass about $\frac{1}{4}$ inch below the grooved end of the levers y_5. The shuttle should now be placed in the opposite box and the same operation performed. Then take the shuttle out of the loom, and pull the lay forwards, noting carefully if each dagger engages with the grooved lever properly. On some looms only one dagger is used, which is placed in the center of the lay, the knock-off lever y_5 being made correspondingly longer.

Digitized by Google

SELVAGE MOTION

27. In many cases, the harnesses of a loom are raised in such a manner that it is impossible to draw the selvage ends through them so as to produce a good selvage on the cloth. When such is the case, a motion for operating the selvage ends independently of the rest of the warp is generally applied to the loom. A common selvage motion applied to woolen and worsted looms is shown in Fig. 17 and is arranged as follows: A casting c_4 is fastened on the end of the bottom shaft c and is provided with a slot in which a pin c_5 is secured. This casting together with the pin acts as a crank and imparts an oscillating motion to an arm z_4 connected with a crank z_5, which in turn is attached to the shaft z extending entirely across the loom. On the shaft z two bosses z_1 are fastened, one of which operates the selvage

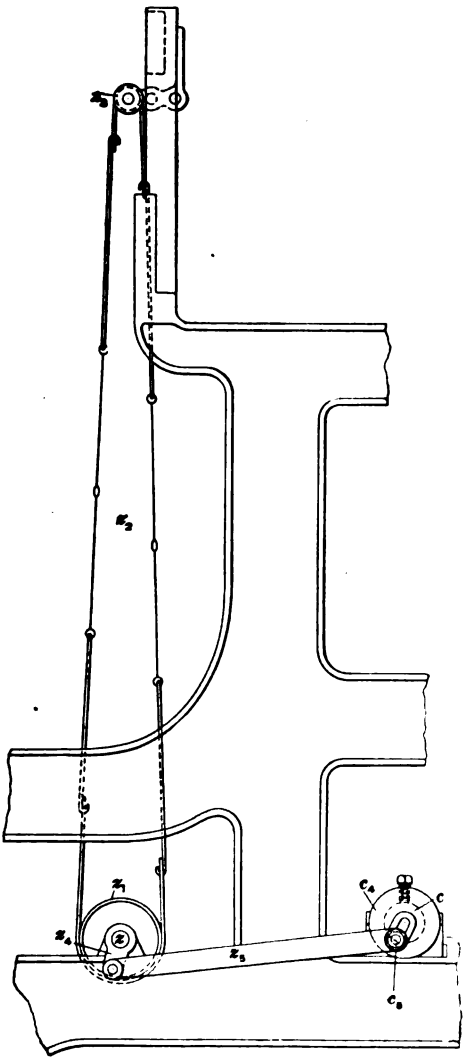

FIG. 17

Digitized by Google

ends on one side of the loom, and the other the selvage ends on the opposite side. The selvage heddles z_2 are attached to these bosses by means of straps and hooks, and at the top similar straps and hooks are led over a roller z_3. The action of the crank gives the shaft z and the bosses z_1 a partial rotary motion that raises and lowers the selvage ends independently of the rest of the warp. The amount of motion imparted to the selvage heddles should be so regulated by means of the pin in the slotted casting c_4 that the selvage yarn will be lifted through the same distance as the rest of the warp. In setting the selvage motion, the loom should be turned over until the harnesses that are changing are level, and the selvage ends set level at this point.

TEMPLES

28. In order to hold the cloth to its full width, so that the contraction due to the interlacing of the filling with the warp will not reduce the width of the cloth too greatly as compared with the width of the warp in the reed, thus straining the selvage ends, the edges of the cloth are passed through **temples**, which are devices that not only hold the cloth to its full width, but also allow it to pass freely to the cloth roll. Fig. 18 (*a*) shows a view of a Knowles temple, consisting of a casting x fastened to a bar x_1 that is carried by brackets a_1, a_2 screwed to the breast beam of the loom. As shown in the illustration, the bar x_1 is pinned to the bracket a_1, while the bracket a_2 has a projection a_3 that holds the bar x_1 in position. The spring q, the tension of which may be adjusted by means of the screw q_1, tends to force the bar x_1 backwards, but at the same time allows the bar to be forced forwards if the lay of the loom comes in contact with the temple. This prevents any damage that might occur if the temple came in contact with the reed.

The temple consists primarily of a tapering stud x_2, Fig. 18 (*b*), in which a number of grooves, usually five, seven, or nine, are cut somewhat obliquely; in these grooves

Digitized by Google

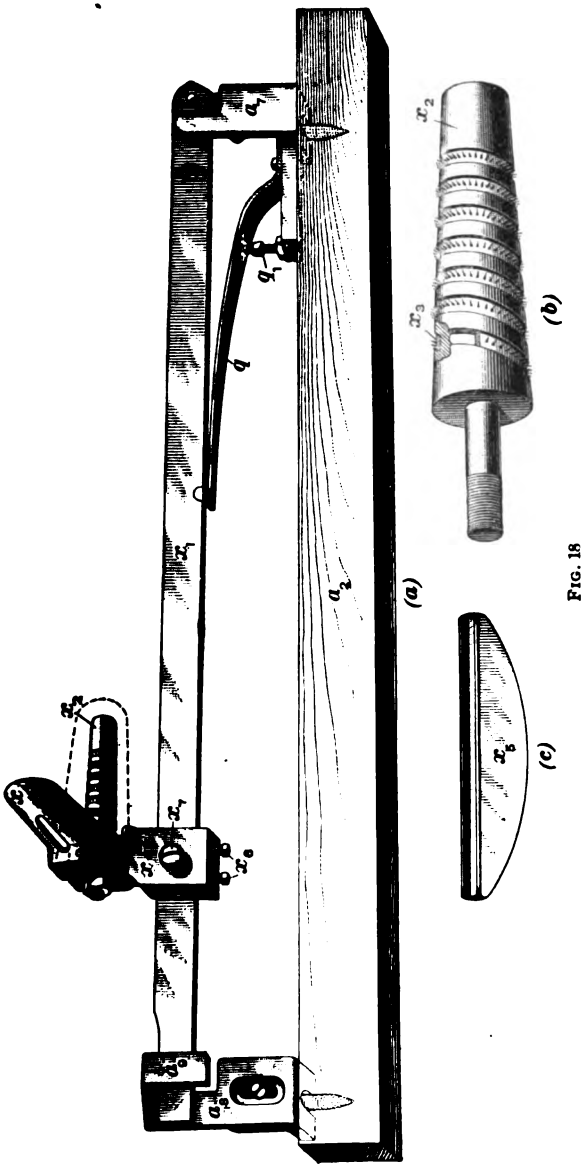

FIG. 18

Digitized by Google

are placed rings x_3 in which fine pins are inserted, so that the rings may engage with the cloth and at the same time be allowed to turn as the cloth passes through the temple. The stud x_3 together with the pin rings is sometimes called the **burr** of the temple. The rings near the free end of the roll are smaller than the others so that they alone will not hold the cloth nor have a tendency to make holes in the fabric. As the pin rings x_3 are placed obliquely on their supporting spindle, the effect will be that while each pin is in contact with the passing cloth it will be moving in a direction oblique to the center line of the loom, so that when a pin extracts itself from the cloth it is nearer the selvage than when it first entered in contact with the cloth. As all the pins act in the same manner, the combined effect will be that the cloth, on either side of the loom, will be pulled outwards and thereby stretched transversely. A cap x_4, which is shown in a raised position in Fig. 18 (*a*), covers the burr and holds the cloth securely in contact with it, the burr being just beneath the cloth and the cap just above the cloth.

In order to adjust the temple at any angle on the bar x_1, a small swivel x_5, shown in Fig. 18 (*c*), is inserted between the bar and the casting x, so that by adjusting the screws x_6, after first loosening the screw x_7, the temple may be set at any angle and afterwards tightened again. Fig. 18 (*a*) shows only one temple, but it should be remembered that there is one on each side of the loom, so that both edges of the cloth are held out as nearly as possible to the full width of the warp in the reed, as shown in Fig. 19, which illustrates the method of applying a pair of temples to a loom. The tension of the spring should always be carefully adjusted so that the temple will follow the cloth perfectly; that is, as the lay beats up and forces the fell of the cloth back, sometimes as much as an inch, the temple should recede also the same distance, and when the pressure of the lay is removed, it should follow back with the fell of the cloth. If, when the reed recedes and the fell of the cloth follows it, the cloth rubs back over the burr, marks or other damages are apt to

Digitized by Google

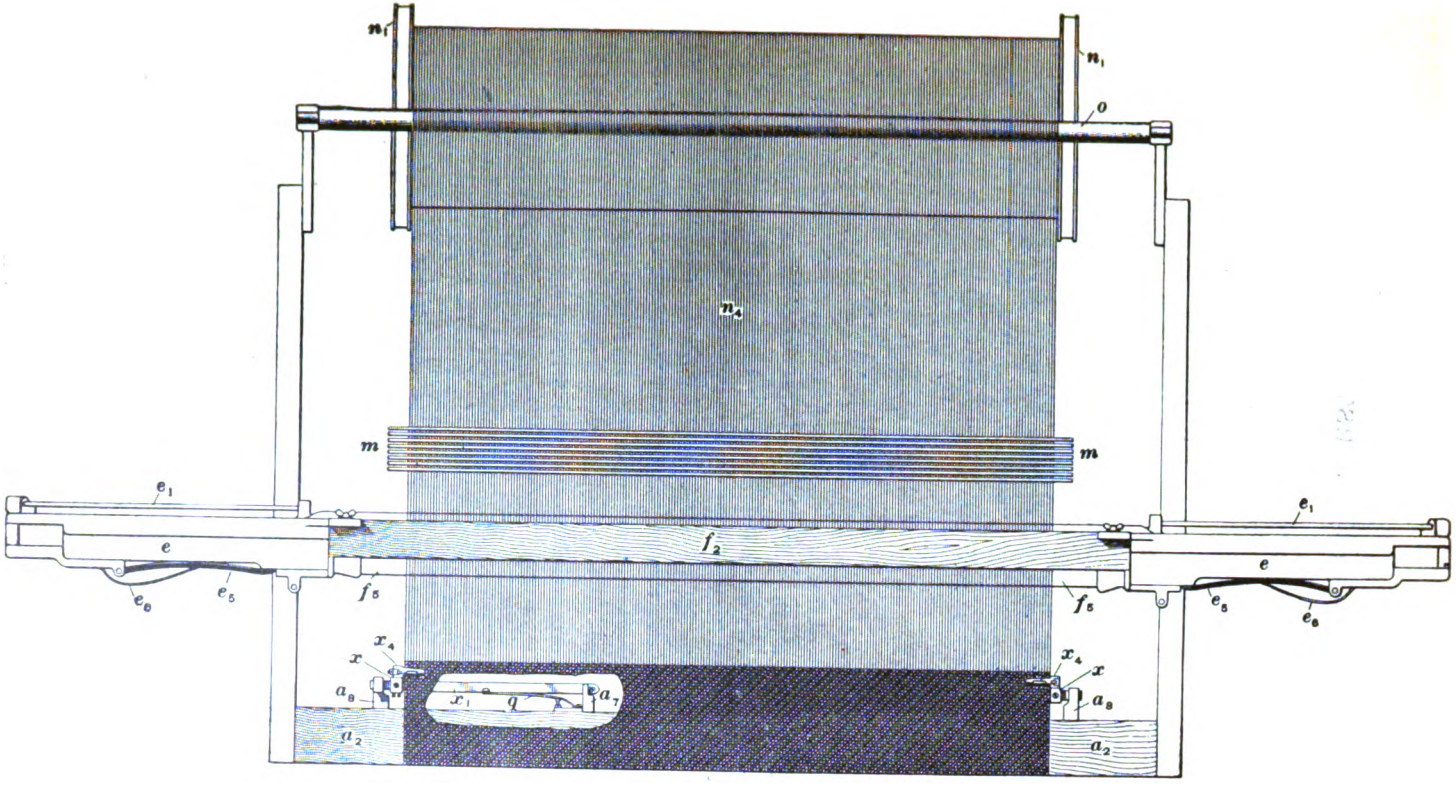

FIG. 19

Digitized by Google

be made near the selvage of the cloth. The temples may be set for any width of cloth by simply loosening them on the bar x_1 and sliding them in or out as may be desired. They should always be so set as to hold the cloth out as wide as possible, so that the selvage ends will pass as nearly as possible in a straight line from the whip roll through the reed to the edge of the cloth. The temple should also be set as close to the fell of the cloth as possible, and the heel of the temple adjusted so that no contact can take place with the reed, but so that the lay will move the temple back before it strikes the reed.

PRODUCTION

29. In estimating the **production** of a loom, a suitable allowance must be made for the necessary stoppages for renewing the filling, tying in broken warp ends, cleaning, and placing new warps in the loom. This allowance must vary according to the class of goods that is being woven and the quality of the warp and filling yarns. An allowance of from 10 to 15 per cent. will be found sufficient in most instances.

To find the production of a loom:

Rule.—*Multiply the speed of the loom by the number of hours the loom is operated and by 60 (minutes in 1 hour). Divide the product thus obtained by the number of picks per inch being inserted in the cloth multiplied by 36 (inches in 1 yard). Deduct from this result a suitable allowance for stoppages.*

EXAMPLE.—A loom is operated 60 hours per week at a speed of 96 picks per minute. If the cloth being woven contains 48 picks per inch and the loom is stopped 15 per cent. of the time, what is the production per week?

SOLUTION.— $\frac{96 \text{ picks per min.} \times 60 \text{ hr.} \times 60 \text{ min.}}{48 \text{ picks per in.} \times 36 \text{ in.}} = 200 \text{ yd.}$

15 per cent. of 200 yd. = 30 yd. 200 yd. − 30 yd. = 170 yd. Ans.

Digitized by Google

WOOLEN AND WORSTED FANCY LOOMS

(PART 1)

INTRODUCTION

1. Cam-looms, although a very desirable type for weaving fabrics of simple construction, are not adapted to those of a more complicated nature. The cams occupy considerable space, so that the number that can be economically used is somewhat limited, eight being the largest number that it is customary to use. Since the number of cams is limited, it follows that only comparatively few harnesses can be employed, and consequently only weaves complete on a few ends can be woven. The construction of a cam-shedding motion also is such that there can only be comparatively few picks in one repeat of the weave. It will likewise be seen that in a mill where a large number of weaves are used and the looms must constantly be changed from one weave to another, cam-shedding motions are totally unsuitable, on account of the large variety of cams that it would be necessary to carry in stock. The changing of a cam-loom from one weave to another, moreover, causes considerable trouble and expense. Because of these difficulties fancy looms having a special shedding mechanism, generally called a *head-motion*, are used for weaving all woolen and worsted fabrics requiring from 8 to 36 harnesses. They are also generally equipped

For notice of copyright, see page immediately following the title page

Digitized by Google

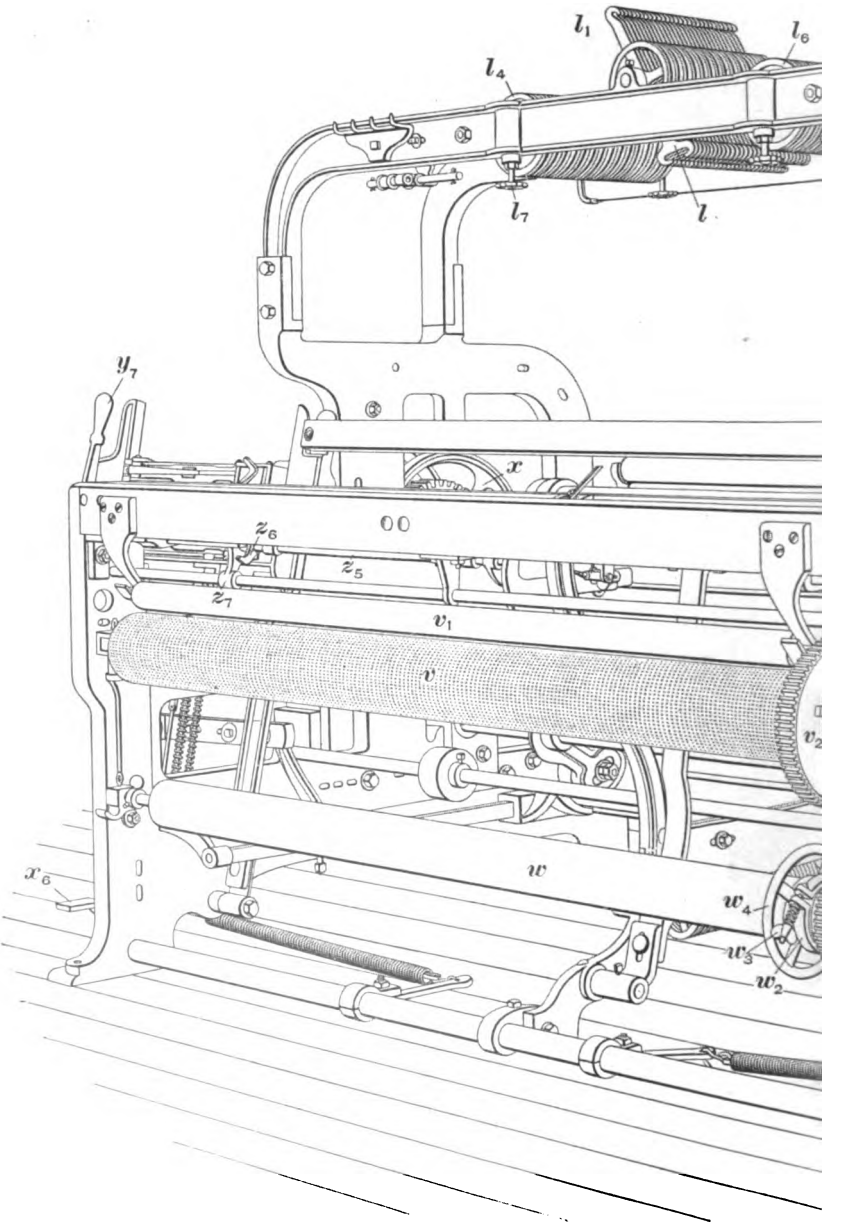

FIG.

Digitized by Google

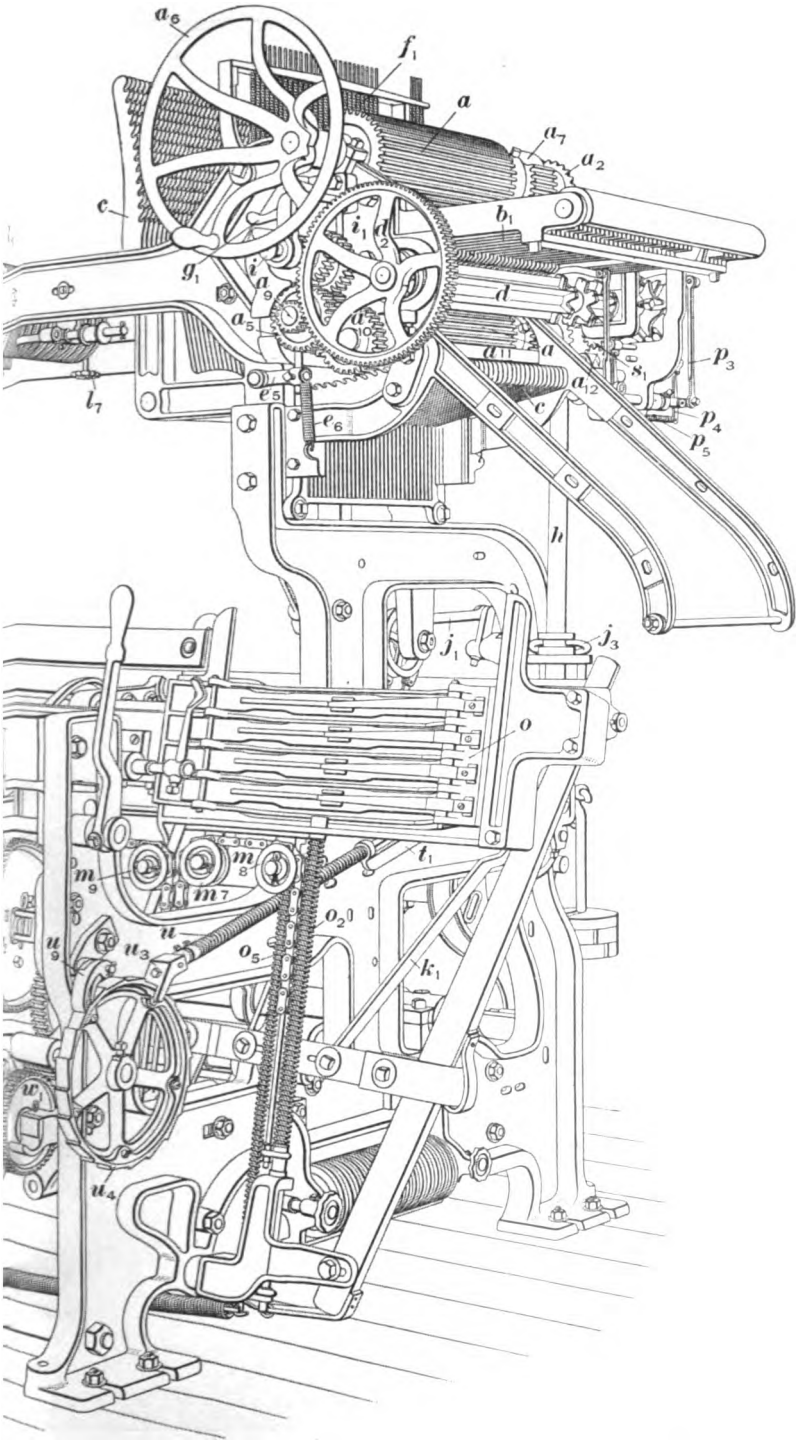

252 15430

Digitized by Google

Digitized by Google

Digitized by Google

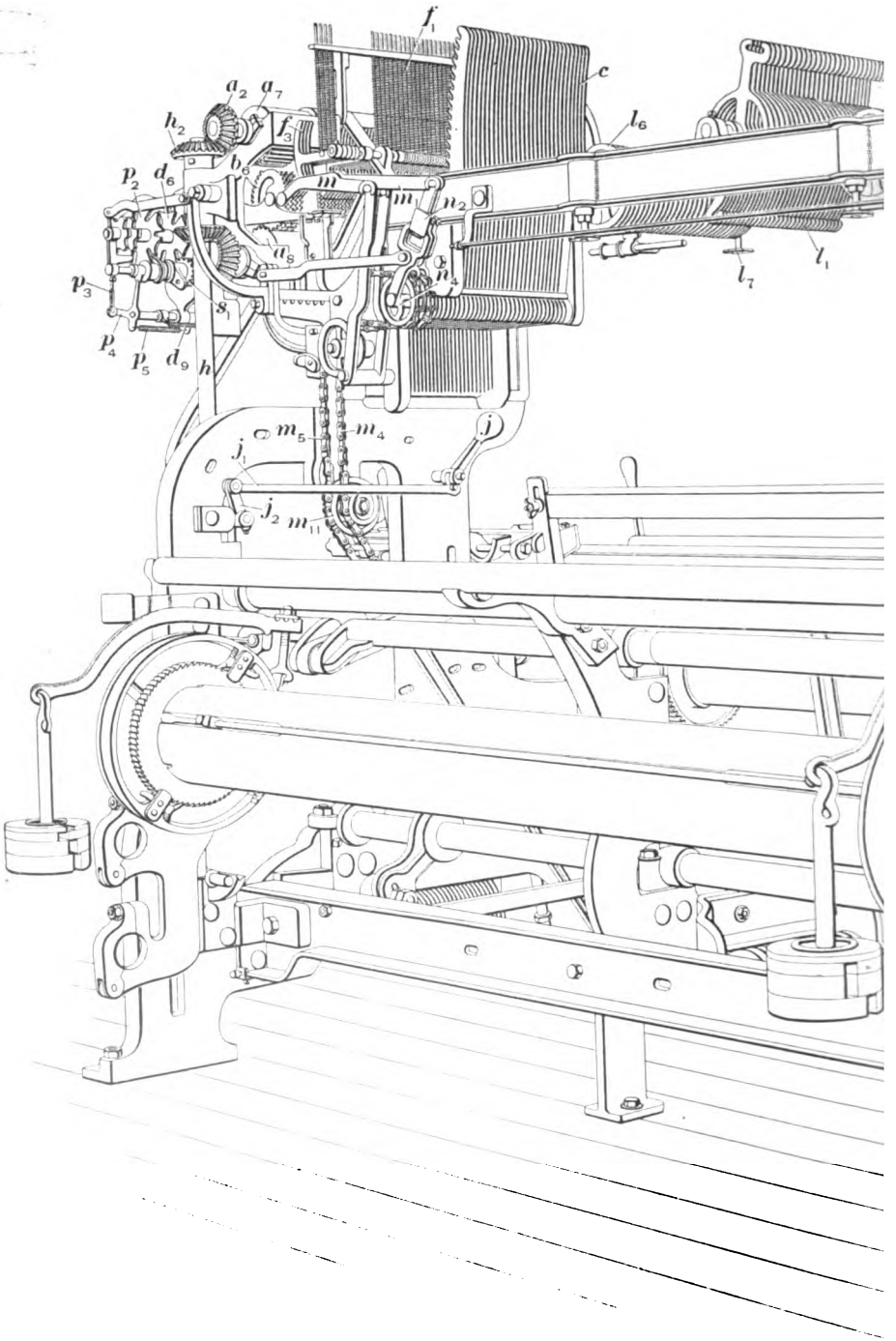

Fi

Digitized by Google

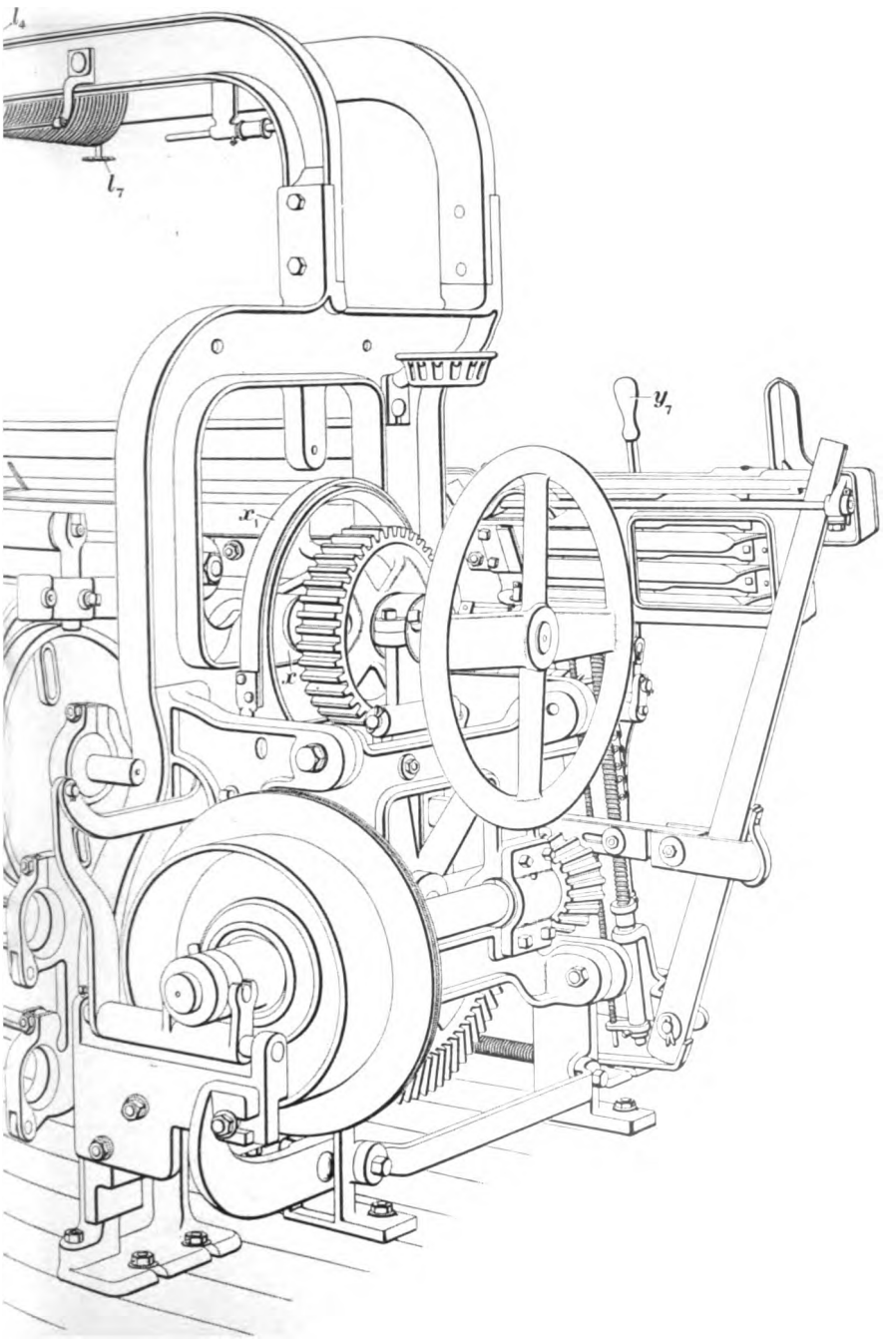

Digitized by Google

Digitized by Google

shedding; a harness that is to be raised passes from the bottom to the top shed, while one that is to be lowered passes from the top to the bottom shed. Each harness remains stationary at either the top or bottom shed until its position is required to be changed. All cam-looms form an open shed, as does also the Knowles fancy loom because of the peculiar construction of its shedding mechanism.

THE KNOWLES FANCY LOOM

3. The **Knowles fancy loom,** shown in Figs. 1 and 2, the former being a front and the latter a back view, is quite similar in general construction to a cam-loom. It is, however, by virtue of the shedding, or head, motion, adapted for weaving more complicated fabrics, and in fact will weave any woolen or worsted fabric that can be woven with harnesses, from the simplest to the most intricate. It is provided with a box motion, so that any filling pattern may be woven, and generally with a brake motion, whereby the loom may be almost instantly brought to rest. The picking motion, although of similar construction to that of the cam-loom, is arranged to operate both picker sticks at each pick, so that the shuttle may be thrown from either side of the loom, as occasion demands. When both picker sticks are thrown in at each pick, the loom is said to be a **pick-and-pick loom.** Other points of difference between the fancy loom and the cam-loom are in the take-up motion and in various minor details.

KNOWLES HEAD-MOTION

SHEDDING MECHANISM

4. A perspective view of the **Knowles fancy head-motion** is shown in Fig. 3, while Fig. 4 is a sectional view showing the essential parts only. The principle on which this shedding motion operates is as follows: Placed directly above and below a number of vibrator gears b are two cylinder gears a, a_1 that extend entirely across the head-motion

Digitized by Google

with box motions, whereby more than one shuttle may be used and, consequently, more than one kind or color of filling inserted in a fabric.

2. Types of Sheds.—There are three different types of sheds formed on power looms that control the warp threads by means of harnesses: (1) the *close shed*, (2) the *split shed*, (3) the *open shed*.

In the **close shed**, all the harnesses are lowered after the insertion of each pick so that all the yarn is brought in line with the bottom shed, or rather with the bottom line of the shed. Although inaccurate, the phrases *top shed* and *bottom shed* are frequently used in a mill. The word shed really indicates the entire space enclosed by the upper and lower lines of warp. The expressions top shed and bottom shed, as commonly used, are abbreviations for the expressions *top line of the shed* and *bottom line of the shed*, and as they have become popular, they will be used in this connection. In the case of a close shed each harness that is to be raised is lifted from the bottom to the top shed and after the insertion of a single pick is again lowered to the bottom shed. With this method of shedding the harnesses must make many unnecessary movements, for if a harness is to be raised for 2 or more picks in succession, it will have to be lowered and raised again between each pick.

In the **split shed**, after the insertion of each pick, the warp is brought level at a point equally distant from the top and bottom sheds; that is, in the center of the shed. In this motion also the harness makes many unnecessary movements, for all the harnesses must move from the center either to the top or bottom shed at every pick; a harness that is to be raised for 2 or more picks must be lowered to the center of the shed and raised again and a harness that is to be lowered for two or more successive picks must be raised and lowered between the insertion of eack pick.

In the **open shed**, the bulk of the warp yarn forms two stationary sheets at the top and bottom lines of the shed. There are no unnecessary movements in this method of

Digitized by Google

Digitized by Google

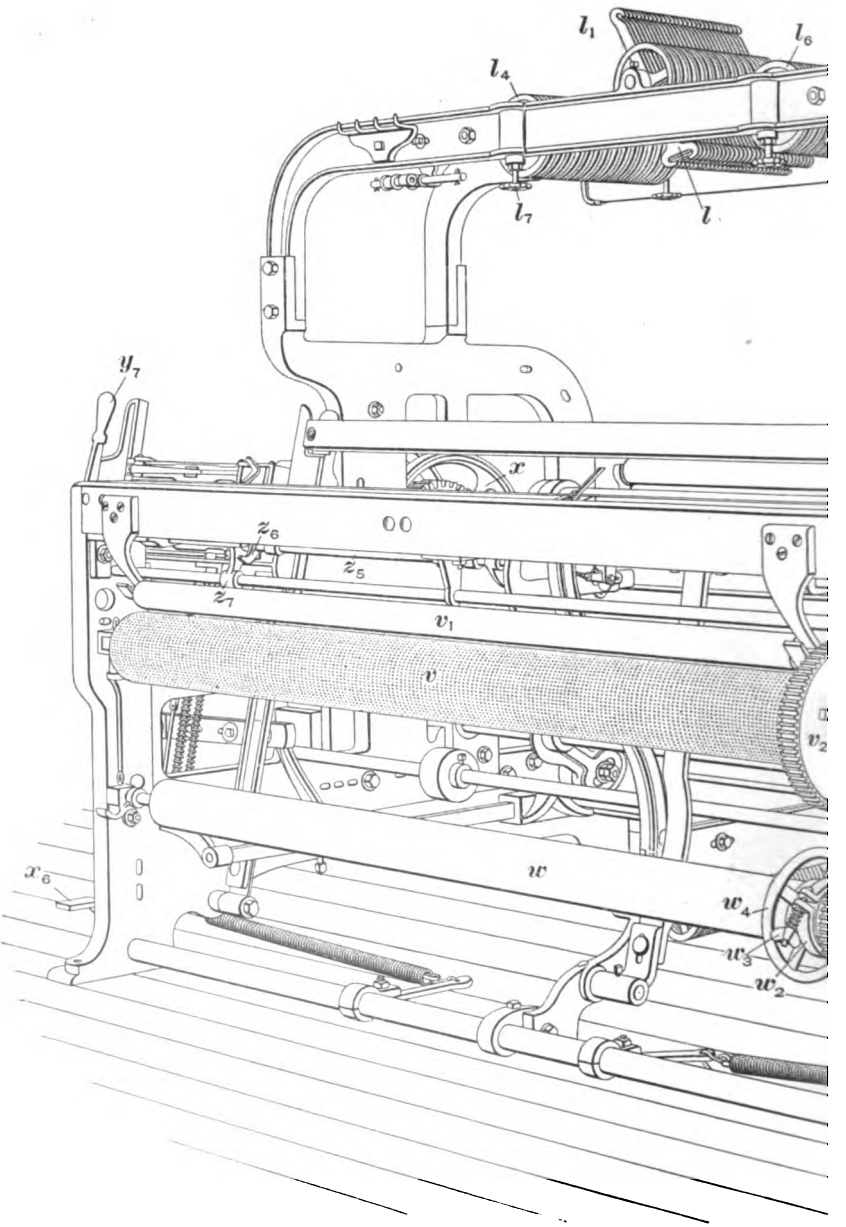

FIG.

Digitized by Google

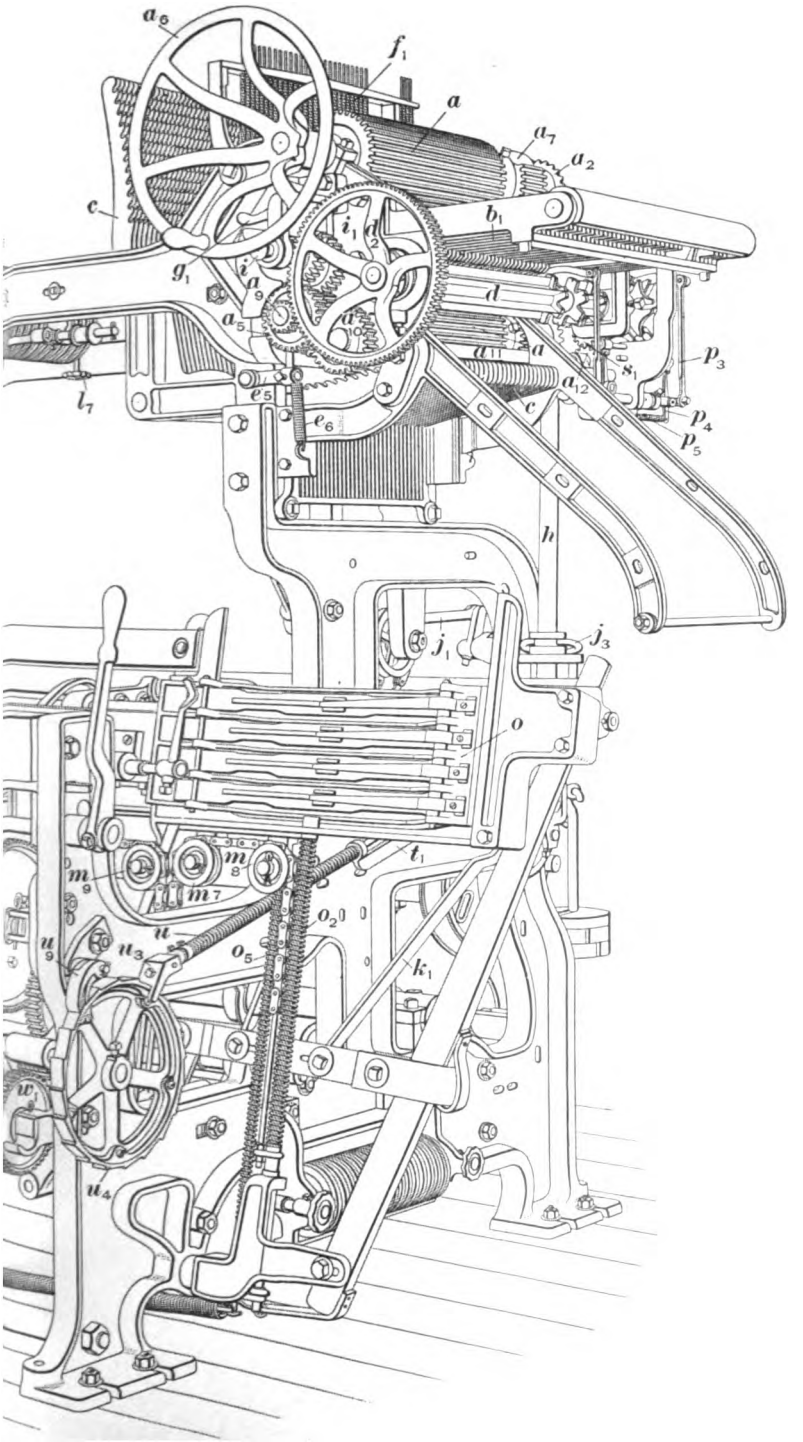

Digitized by Google

Digitized by Google

Digitized by Google

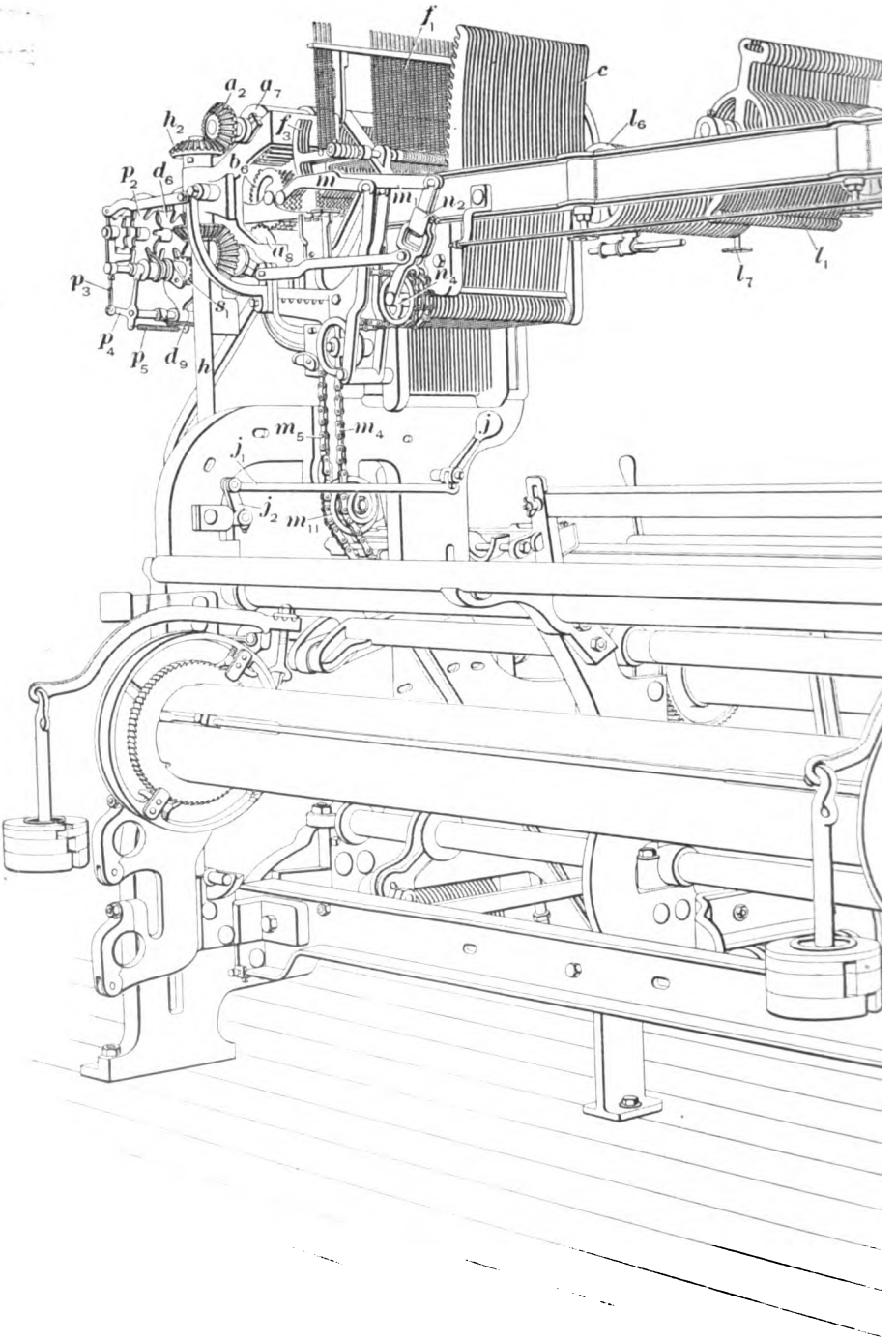

Digitized by Google

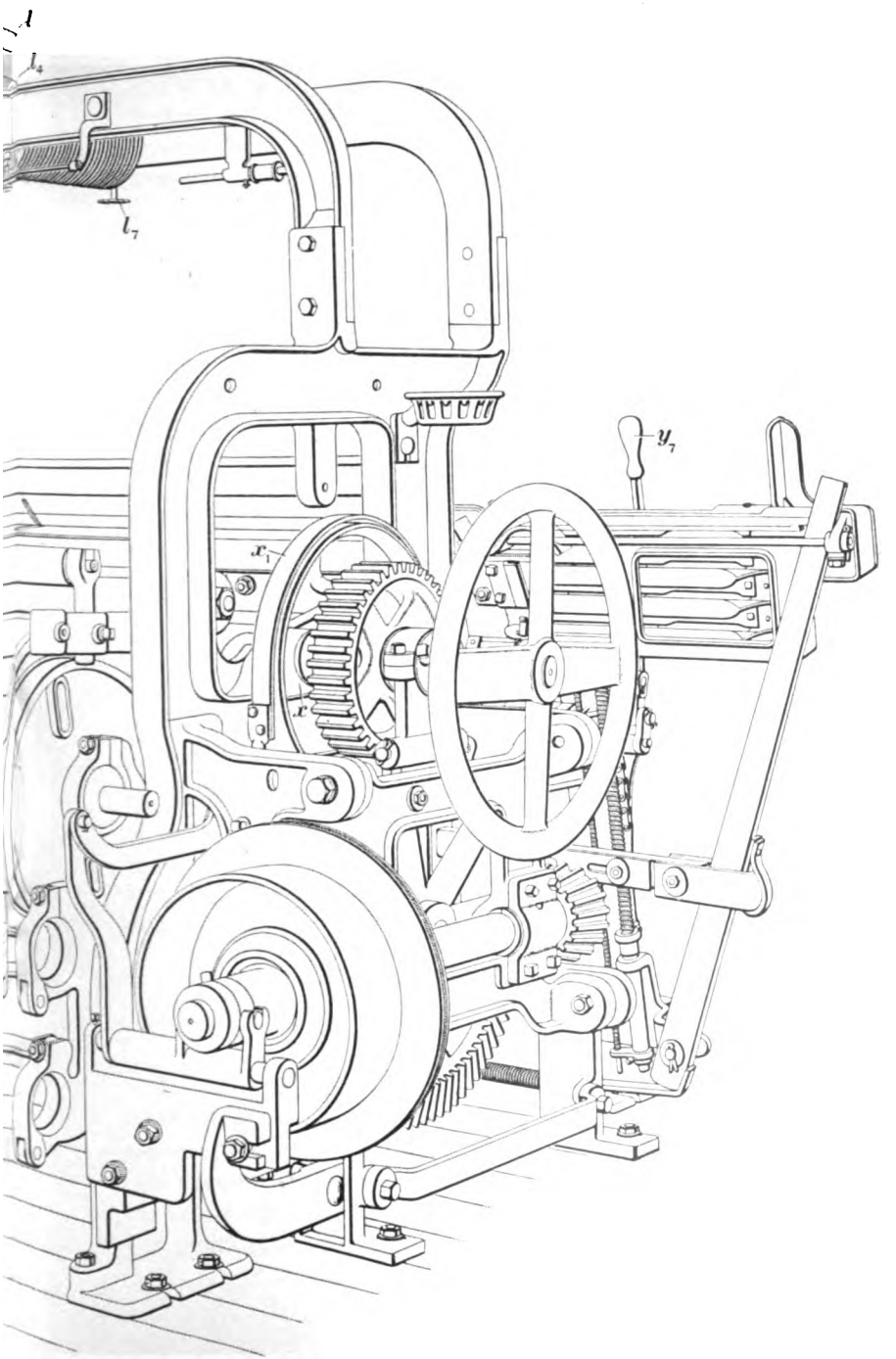

Digitized by Google

Digitized by Google

shedding; a harness that is to be raised passes from the bottom to the top shed, while one that is to be lowered passes from the top to the bottom shed. Each harness remains stationary at either the top or bottom shed until its position is required to be changed. All cam-looms form an open shed, as does also the Knowles fancy loom because of the peculiar construction of its shedding mechanism.

THE KNOWLES FANCY LOOM

3. The **Knowles fancy loom,** shown in Figs. 1 and 2, the former being a front and the latter a back view, is quite similar in general construction to a cam-loom. It is, however, by virtue of the shedding, or head, motion, adapted for weaving more complicated fabrics, and in fact will weave any woolen or worsted fabric that can be woven with harnesses, from the simplest to the most intricate. It is provided with a box motion, so that any filling pattern may be woven, and generally with a brake motion, whereby the loom may be almost instantly brought to rest. The picking motion, although of similar construction to that of the cam-loom, is arranged to operate both picker sticks at each pick, so that the shuttle may be thrown from either side of the loom, as occasion demands. When both picker sticks are thrown in at each pick, the loom is said to be a **pick-and-pick loom.** Other points of difference between the fancy loom and the cam-loom are in the take-up motion and in various minor details.

KNOWLES HEAD-MOTION

SHEDDING MECHANISM

4. A perspective view of the **Knowles fancy head-motion** is shown in Fig. 3, while Fig. 4 is a sectional view showing the essential parts only. The principle on which this shedding motion operates is as follows: Placed directly above and below a number of vibrator gears b are two cylinder gears a, a_1 that extend entirely across the head-motion

Digitized by Google

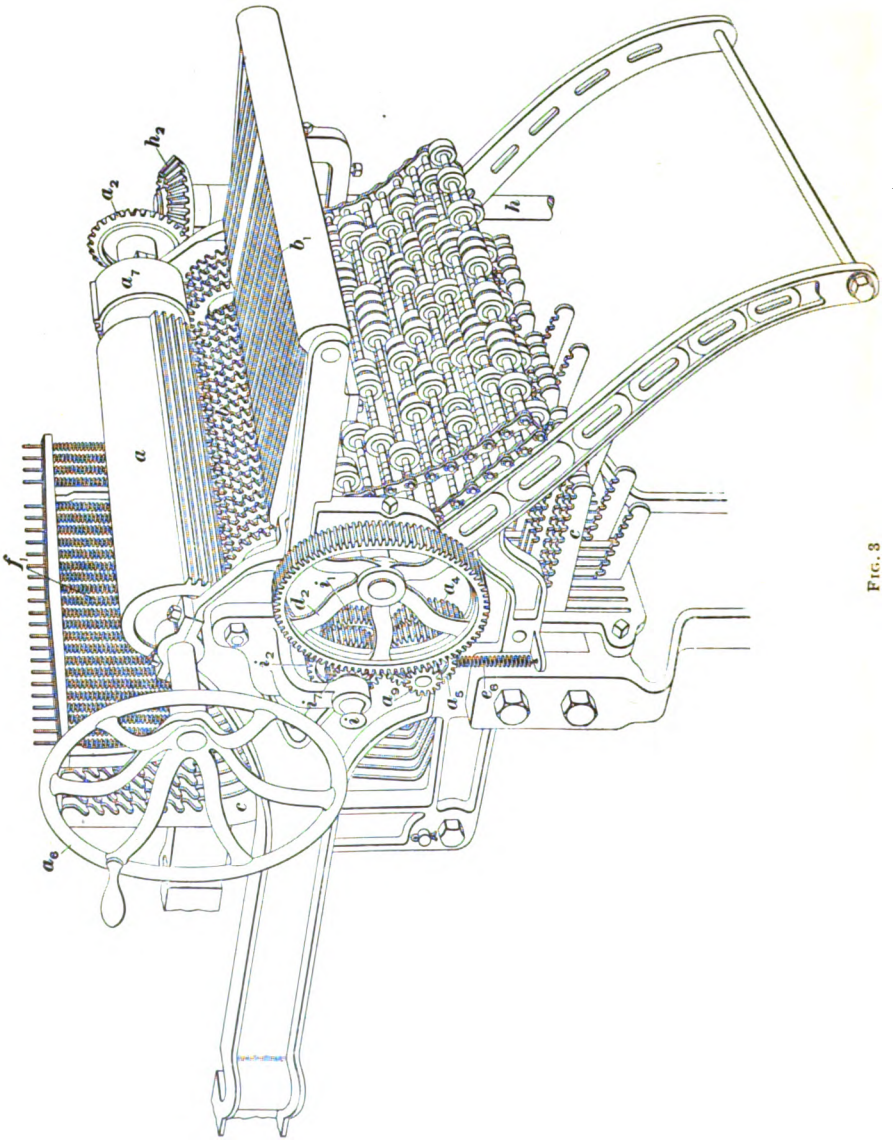

FIG. 3

Digitized by Google

and have teeth cut on half of their circumferences, the other half being blank; a rotary motion is imparted to them in the direction indicated by the arrows. The vibrator gears b, of which there are as many as there are harnesses to be operated, are constructed of steel disks about $\frac{3}{16}$ inch in thickness and have teeth cut on them to mesh with the teeth on the cylinder gears. On one side of the vibrator gear a blank space of 1 tooth is left; on the other side, diametrically opposite, a blank space of 4 teeth is left. The vibrator gear is free to turn on a pin placed in the end of the vibrator lever b_1, which is fulcrumed on a rod b_2. A connector b_3 pivoted at a point near the outer edge of the vibrator gear connects the harness jack c with the gear. A hard steel "run," or "chill," b_4 is riveted on the vibrator lever at a point where it will come in contact with a pattern chain d_1, which is supported by a chain cylinder d.

This pattern chain is constructed, according to the weave desired in the cloth, of small rolls called *risers* and washers called *sinkers*, which are threaded on spindles connected by links and held together by cotter pins passed through holes in their ends. The chain cylinder is rotated so that one bar of the pattern chain is brought under the runs of the vibrator levers for each pick of the weave. The action of the mechanism is as follows: Whenever a roller is brought under the vibrator lever, the latter is lifted and consequently raises the vibrator gear pinned to its extremity, thus bringing it in contact with the top cylinder gear a, which is constantly rotating. The cylinder gear turns the vibrator gear about $\frac{1}{8}$ revolution, or until the blank space of 4 teeth is brought on top. This movement of the vibrator gear causes the point to which the connector b_3 is connected to move from one dead center to the other, thus drawing the connector and jack c in toward the head-motion and raising the harness, which is attached to the jack as shown by the dotted lines. It should be noted that this part of the drawing is not to scale; that is, it is reduced in size as compared with the shedding mechanism. A small rod c_2 passing just above the hubs of the jacks prevents their coming off the rod c_1

Digitized by Google

when raising the harness. The vibrator gear continues to keep the harness raised as long as rollers come under the run of the vibrator lever, but should a washer be substituted, the vibrator lever and gear would be lowered, and the latter coming in contact with the bottom cylinder gear a_1 would be turned until the blank space of 4 teeth was at the bottom, where it would remain until another roller was brought up. This would have the effect of forcing the pin to which the connector is fastened to the other side of the vibrator gear, thus forcing the connector and jack toward the loom and lowering the harness. In Fig. 4 the vibrator gear is shown in the position it assumes when a washer is brought under the vibrator lever; the bottom cylinder gear is just starting to turn the vibrator gear and lower the harness.

There is a semicircular slot in the vibrator gear with which a steadying pin b_4 riveted in the vibrator lever engages. This pin, together with the length of the slot in the vibrator gear governs the extent of movement of the gear and prevents its momentum or any other cause from throwing the gear beyond the proper stopping place.

5. Lock-Knife.—A device for locking the vibrator levers in position while the cylinder gears are turning the vibrator gears, prevents the vibrator gear from being forced out of contact with the cylinder. This device consists of a **lock-knife**, or long steel blade, e_3 fastened by castings e_4 to a shaft e_5 in such a position that it will engage with the ends of the vibrator levers. The lock-knife not only locks the vibrator levers that are down, but by coming between them and the vibrator levers that are raised, locks every vibrator lever so that the vibrator gears that are lowered are held in contact with the bottom cylinder gear, and those that are raised in contact with the top cylinder gear. The lock-knife is moved from contact with the vibrator levers when a new bar of the chain is about to be forced under them by means of a cam e fastened on the shaft of the bottom cylinder gear. This cam operates a cam-follower e_1 that is setscrewed to a casting e_4 fastened on the shaft e_5.

Digitized by Google

Digitized by Google

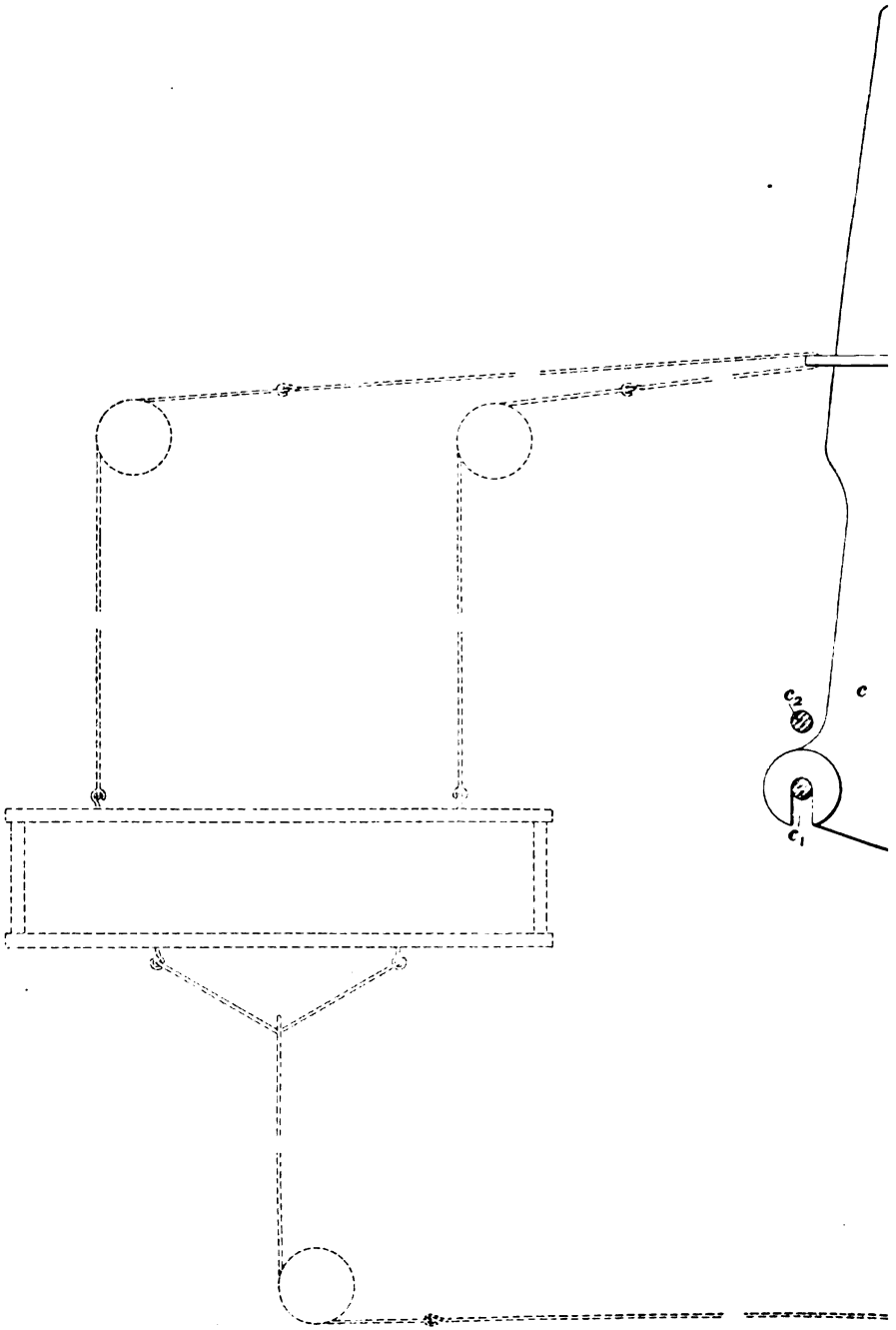

Digitized by Google

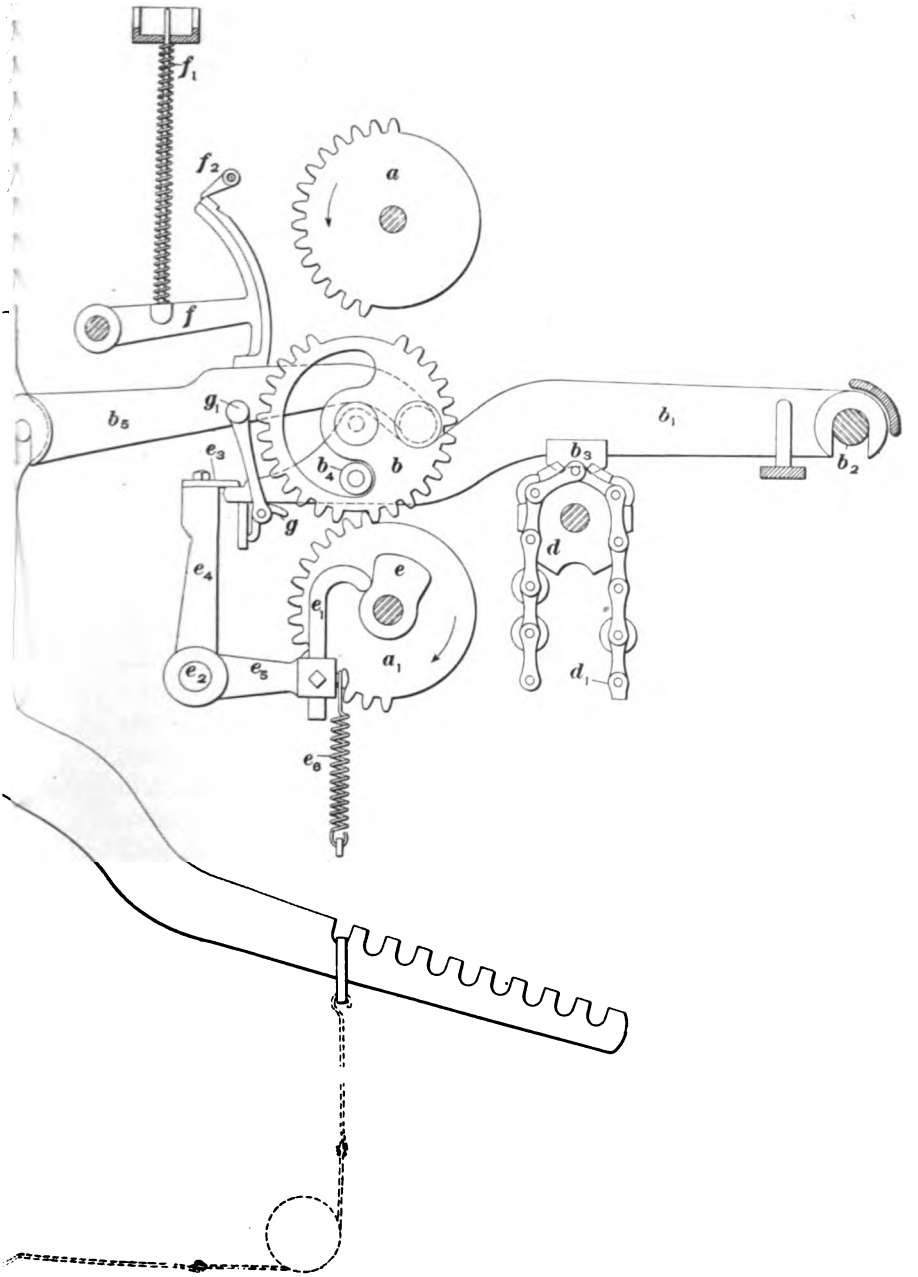

Digitized by Google

Digitized by Google

A spring e_2 keeps the cam-follower e_1 in contact with the cam e at all times.

The timing of the lock-knife is important, since if it were to remain in contact with the vibrator levers when a riser is forced under the run, the levers or lock-knife would be bent or broken. It should be set so as to be just moving from contact with the vibrator levers when a new bar of the chain is being forced under the runs. When the cylinder gear engages the first tooth of the vibrator gear the lock-knife should have engaged with the ends of the vibrator levers. The cam e is fastened to the shaft with a pin and is not movable, but by moving the cam-follower e_1 in the casting e_2 an adjustment sufficient for timing the lock-knife may be obtained. If e_1 is lowered, the lock-knife will be timed earlier, and if raised, it will commence to move later.

6. Follower Levers.—When this head-motion is run at high speed there is some danger of the vibrator gears rebounding between the two cylinder gears. In order to prevent this there is a separate hammer, or follower-lever, f for each connector. This lever is pressed on the connector by a spring f_1 threaded on a rod passing through a hole in a bar at the top of the head-motion. Small latches, or pawls, f_2 for each lever are placed on a rod running across the head, so that any of these levers may be raised and held away from the connector by engaging the latch with a notch in the lever. This is necessary when it is desired to remove the vibrator lever and connector from the loom for repairs or other purposes, and also when it is desired to run the loom with part of the vibrators out, in which case the latch will prevent the lever from dropping down and allowing the rod and spring to fall out.

7. Harness-Leveling Device.—With an open-shed loom it is difficult for the weaver to draw in broken warp ends, because the heddle eyes are not all on one level. To obviate this difficulty a harness-leveling device is generally applied to open shedding motions. This device consists of an eccentric bar g located just beneath the vibrator levers and arranged to be turned on an axis, by means of a handle g_1,

Digitized by Google

in such a manner as to raise all the vibrator levers so that the vibrator gears will be in contact with the top cylinder gear exactly as though risers were brought under each vibrator lever. After raising the vibrators in this manner, if the head-motion is moved 1 pick, after disconnecting it from the rest of the loom, as will be explained later, all of the harnesses will be raised to the level of the top shed, thus enabling the weaver to easily draw in any broken ends.

8. Driving the Head-Motion.—The head-motion is driven from the crank-shaft of the loom by means of a gear h_7 that engages with a gear h_6 on a stud, as shown in Fig. 5. On the side of the gear h_6 teeth are arranged as for a bevel gear; these engage with a bevel gear h_5 that is loose on the upright shaft h. Motion is imparted to this shaft by means of a pin h_6 attached to a loose collar h_3, but extending through a boss h_4 fastened to the shaft and into a hole in the gear h_5. Fastened to the upright shaft are two bevel gears h_2, h_1 that mesh with the gears a_2, a_3, respectively, setscrewed to the shafts of the top and bottom cylinder gears a, a_1, to which motion is thus imparted. As stated, this drive is generally from the crank-shaft of the loom, but on some looms the upright shaft is driven from the bottom shaft; the arrangement of the gears is practically the same, however, in each instance.

It very often happens that it is necessary for the weaver to disconnect the driving mechanism of the head-motion and turn the latter by hand, as, for instance, when finding the correct pick on which to start the loom after a pick-out, etc. This may be accomplished by means of a handle j bolted inside the frame of the loom and connected to a yoke j_2 by a rod j_1 and arm j_3. The yoke engages with a groove in the collar h_3, which it raises when the handle j is drawn forwards. When the collar h_3 is raised, it withdraws the pin h_6 from contact with the gear h_5, which allows the shaft h to turn loosely and the shedding mechanism to be operated by means of the hand wheel a_5, Fig. 6 (a), without interfering with any other part of the loom.

Digitized by Google

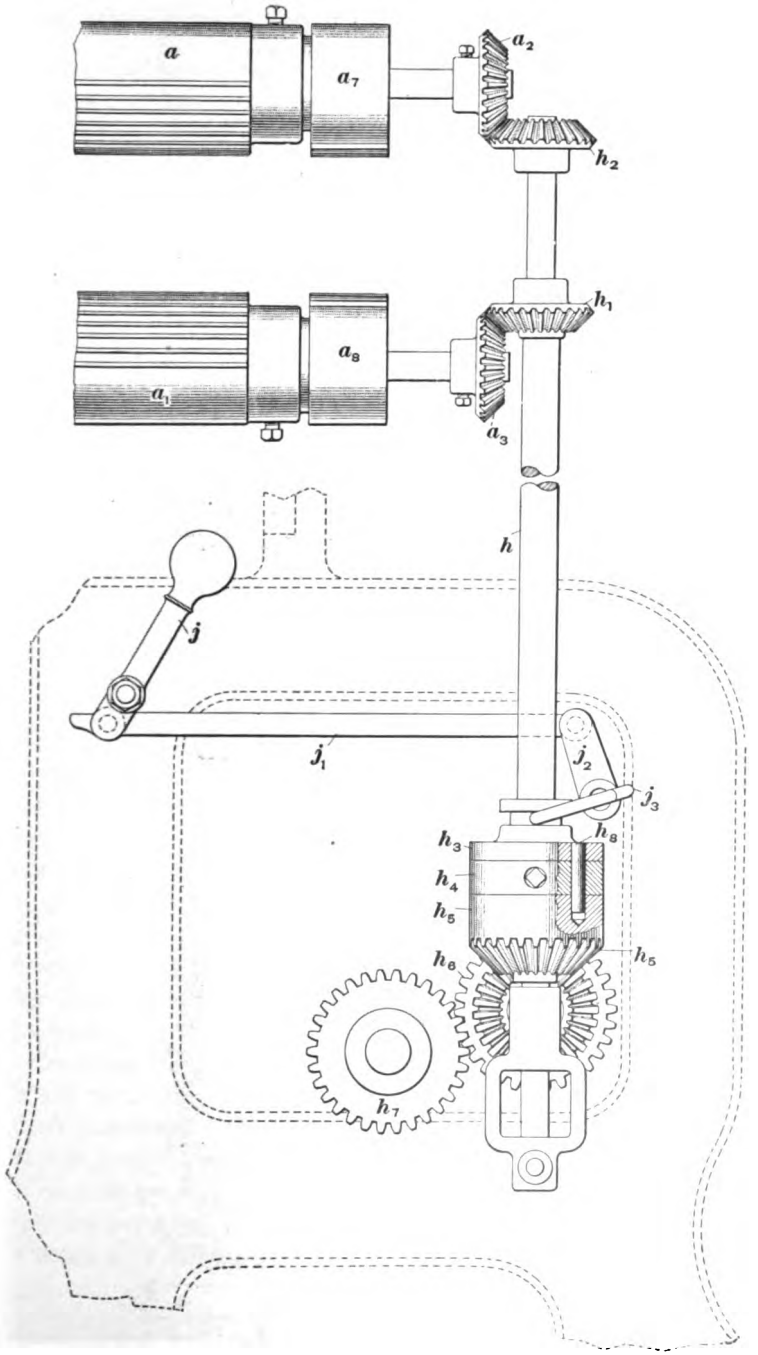

FIG. 5

Digitized by Google

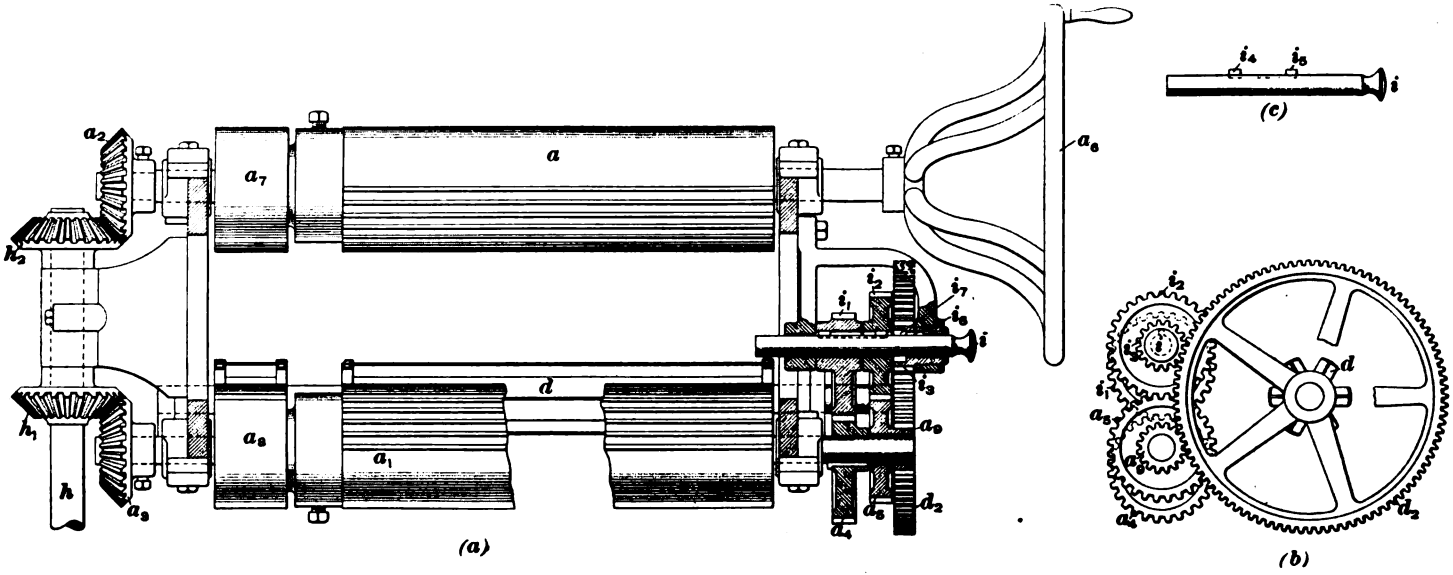

FIG. 6

Digitized by Google

9. Chain-Cylinder Drive.—The chain cylinder, which carries the pattern chain and presents each bar in succession to the runs of the vibrator levers, is driven from the bottom cylinder-gear shaft, as shown in Figs. 3 and 6 (*a*) and (*b*). An eccentric gear a_4 keyed to the shaft of the bottom cylinder gear drives an eccentric gear i_1 carried on a sliding key i, to which it imparts a rotary motion. Another gear i_2 on the sliding key imparts motion to a gear a_5, that is loose on the shaft of the bottom cylinder gear. A gear a_6 compounded with this gear drives a gear d_2 that is fastened, usually with a soft setscrew, to the shaft of the chain cylinder d. Sometimes when the pattern chain is stiff, either because the chain stuff is new or because the chain is gummed up, it will gather in a bunch and prevent the chain cylinder from turning. When this happens the soft setscrew in the gear d_2 will break and allow the gear to turn without imparting motion to the chain cylinder, otherwise a serious smash would be made in the head-motion, which would cause extensive repairs, while the soft setscrew can be easily replaced.

The reason for inserting a pair of eccentric gears a_4, i_1 in the train that drives the chain cylinder is to secure a variable motion of the chain. When a new bar is being forced under the runs of the vibrator levers, the speed of the chain is fast, so that the bar may come into position as quickly as possible; but after the bar has raised and lowered the vibrator levers, so that the vibrator gears are in contact with the cylinder gears, the motion is very slow, in order to allow the vibrator gears to be operated and the harnesses changed before the bar leaves the chain cylinder and another bar is forced in position.

On some looms the variable motion of the chain cylinder is not obtained by eccentric gears a_4, i_1 located in the head itself, but instead the gears h_7, h_8, Fig. 5, are made eccentric. In this case the whole head-motion is eccentric, but when the motion is geared as shown in Fig. 6 (*a*) and (*b*), the chain cylinder only has an eccentric movement, the cylinder gears rotating at a constant rate of speed.

Digitized by Google

10. Reverse Motion.—There is a device for reversing the direction of rotation of the chain cylinder, so that the loom may be turned over by hand and the chain run backwards, opening the sheds in reverse order and enabling the weaver to find the correct pick whenever this has been lost through the filling running out or a part of the cloth having been picked out. This is accomplished by means of the sliding reverse key i, Fig. 6 (c), which consists of a round pin having two projections i_4, i_6 and a knob head that may be readily grasped by the weaver when it is desired to reverse the chain. The projection i_4 is constantly engaged with a keyway cut in the gear i_1, whether the sliding key is drawn in or out, owing to the width of the gear; it therefore imparts a constant rotary motion to the key. The projection i_6 may engage with a keyway in the gear i_3 if the key is pushed entirely in, or it may engage with a keyway i_5 in the gear i_2 if the key is drawn entirely out, while if the key is only partially drawn out this projection will be received by the cupped end i_7 of the gear i_2 and thus impart motion to neither gear. When the reverse key i is drawn out as far as it will go, motion is imparted to the chain cylinder through the gears a_4, i_1, i_2, d_2, which will turn the chain cylinder in the opposite direction from its motion during the ordinary running of the loom, thus enabling the weaver to turn the chain back by means of the hand wheel a_6, after the head-motion has been disconnected from the driving arrangement. The gears a_5, a_6, i_3 simply revolve loosely during this operation and have no effect on the driving of the chain whatsoever.

When it is desired to level the harnesses, the driving mechanism of the head is first disconnected and the key i then partially drawn out so that the projection i_6 just enters the cupped end i_7 of the gear i_2. The vibrators may now be raised by means of the leveling bar and the head-motion turned with the hand wheel a_6, which will raise all the harnesses to the top shed. The chain remains at rest in this case, because the sliding key i does not impart motion to either the gear i_2 or the gear i_3; both of these and also the gears a_5, a_6, d_2 remain stationary. By this means the

Digitized by Google

harnesses may be quickly leveled without losing the pick, since the pattern chain is not displaced, no matter how the head-motion is moved.

11. Setting the Reverse Gears.—In placing the gears of the head-motion together, care should be taken that they are arranged so that the setting pins will come in the correct position. These *setting pins* are small pins inserted in the mesh between 2 teeth on one gear and engaging with a hole cut in the center of the tooth of the other gear. This arrangement is used on gears where it is necessary that they should be set in a definite relation to each other. It happens sometimes, however, that the setting pins have been destroyed and there is no guide to set the gears by. To set the reverse gears, even if the setting pins are knocked out, the following method may be employed: Disconnect the driving clutch of the loom and turn the head-motion until the finger that operates the lock-knife is in the exact center of the cam, and the lock-knife at its farthest position from the vibrator levers. Then turn the pattern-chain gear until the vibrator gears are raised so that they are exactly half way between the top and bottom cylinder gears. The reverse gears may now be put together with all the keyways in a straight line so that the reverse key may be forced in and out without moving the gears in the least.

12. Fast and Slow Motion for Chain Cylinders. Another method of imparting an eccentric movement to the chain cylinder is shown in Fig. 7. In this method no use is made of eccentric gears, but instead the characteristic fast and slow motion of the chain is obtained by a peculiar construction of the gear d_4 on the chain-cylinder shaft. This gear is constructed with as many sections of teeth spaced equidistant around its circumference as there are recesses in the chain cylinder for the reception of the chain bars. Between each section of teeth is a notch, or cut-out, that is engaged by a pin k fastened to a plate k_1 screwed to the gear k_2. A mutilated pinion gear k_3 is made in one piece with the plate k_1 and contains nine teeth, which mesh with

Digitized by Google

the sections of 10 teeth in the gear d_3; as the gear k_3 rotates, therefore, the gear d_3 will be alternately driven by the mutilated pinion k_3, which imparts a very slow motion, and by the pin k engaging with a cut-out, which imparts a fast motion to the chain cylinder. When a bar of the chain is just starting to raise the vibrator levers, the first tooth of the mutilated pinion should be just commencing to engage

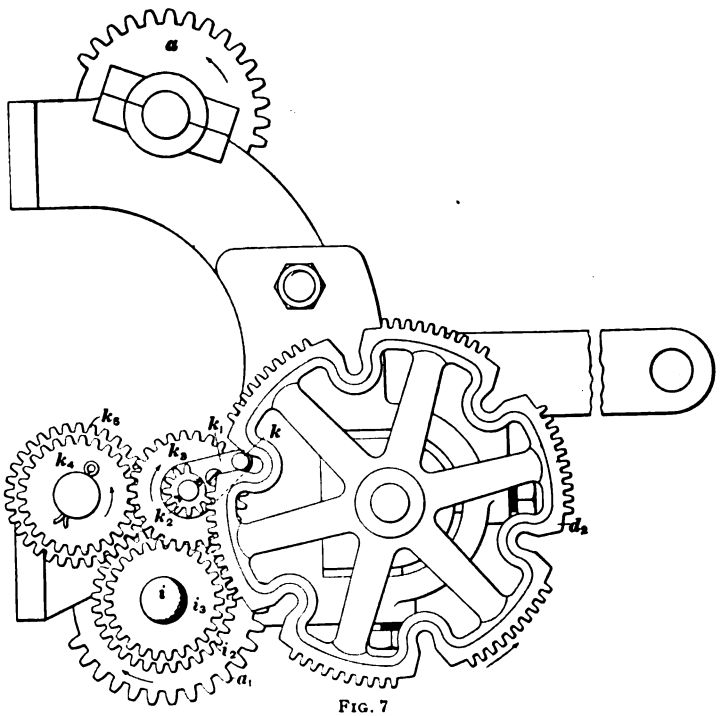

FIG. 7

with a section of the teeth on the gear d_3 and the pin should be moving out of the cut-out; but when the bar of the chain starts to leave the vibrator levers, the pin should commence to engage with the next cut-out, while the mutilated pinion should be just leaving the section of teeth.

The reverse gears are arranged in a slightly different manner in this arrangement for driving the chain cylinder than in that previously described. The shaft of the bottom

Digitized by Google

cylinder gear a_1 is key-seated and carries a sliding reverse key i that has only one projection, which may engage with either the gear i_1 or the gear i_2. When the key is pushed in and the loom running in the ordinary manner, the gear d_1 on the shaft of the chain cylinder is revolved in the direction of the arrow, in consequence of being driven through the gears i_2, k_3, k_4, k_2; but when the reverse key is drawn out so that its projection engages with the gear i_3, it is driven in the reverse direction by means of gears i_3 and k_3, the gears k_4, k_2, i_2 turning loosely.

HARNESS-EVENER MOTION

13. There is often considerable difficulty on broad looms in strapping the harnesses so that the yarn will be at the same height in respect to the race plate on each side of the loom. There is a tendency for the side farthest from the shedding motion to be lower than the other side; and in some cases the difference becomes so great as to cause the yarn to drag on the race plate on one side, while on the other side it is so high as to give the shuttle an upward tendency when entering the shed, which is liable to throw it from the loom. Even if the harness is strapped correctly at first, the strap operating the farther end of the harness will stretch more than that operating the nearer end, on account of its greater length. This difficulty may be confined to only a few harnesses, in which case it is more difficult to remedy than if all the harnesses are affected alike.

In order to prevent this trouble, a special arrangement is made for connecting the harness to the jack on broad looms, as shown in Fig. 8. A shaft carrying pulleys having extended arms l, l_1 is placed between the two arches of the loom in the center of the reed space. The arm l has two hooks, to one of which a strap or wire l_2 attached to the jack of the shedding motion is fastened, while to the other is fastened a strap l_3 passing over the sheave l_4 to the harness. On the arm l_1 is a single hook, to which is fastened a strap l_5 that passes over the sheave l_6 and is attached to the other end of the harness. It will be seen that the arms l, l_1 form

Digitized by Google

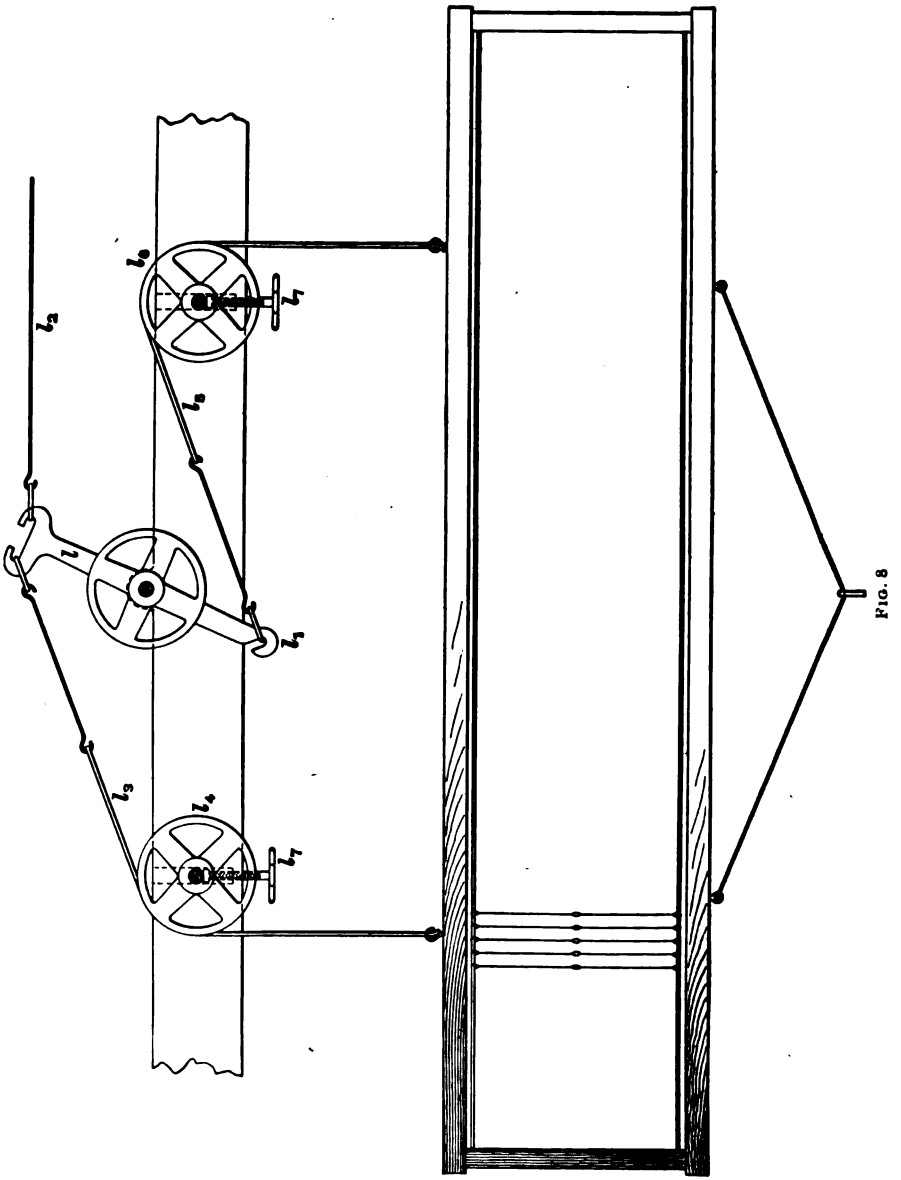

FIG. 8

Digitized by Google

a lever, which when turned on its fulcrum, by the shedding motion acting through l_3, will impart an equal movement to each end of the harness, as the arms are of the same length. The object of the pulley form of this lever is simply to strengthen the extended arms, which are subjected to considerable strain in transmitting the motion of the shedding mechanism to the harnesses. The straps l_5, l_6 being of the same length, will stretch equally if any stretch takes place. The sheaves l_4, l_6 are carried on shafts extending across the two arches and are provided with adjustment screws l_7 whereby the sheaves may be raised or lowered should all the harnesses become too high or too low on either side of the loom.

BUILDING HARNESS CHAINS

14. As has been stated, a harness may be raised on any pick by placing a roller, or lowered by placing a washer, on the pattern chain in such a position that it will come under the vibrator lever governing that harness. Since this is the case, any harness may be raised and lowered in any order desired, and any selection of harnesses to be raised on any pick may be made. The order of lifting and lowering the harnesses is generally made out by the designer on design, or point, paper and is known as a **pattern-chain draft**, or simply a **chain draft.** It is the duty of those engaged in the weave room to build the harness, or pattern, chain so that the harnesses will be lifted in the manner indicated by the designer's chain draft.

To illustrate the method of accomplishing this, suppose that it is desired to build a harness chain so that the harnesses will be lifted according to the draft shown in Fig. 9. This draft consists of filled, or black, spaces, representing a harness raised, and empty spaces, indicating a harness lowered. Each horizontal row of squares, or those passing across the draft, represents 1 pick of the weave, or one bar of the harness chain; each vertical row of squares corresponds to a vibrator lever and the harness controlled by it and shows the manner of lifting that harness. Thus, if it is desired to raise any particular harness on any pick, a mark

Digitized by Google

is placed on the vertical row of squares corresponding to that harness and on the pick on which it is desired to lift the harness. It will be seen, therefore, that the horizontal rows of squares indicate the harnesses that are raised or lowered on each successive pick, while the vertical rows of squares represent on what picks each individual harness is to be raised and lowered. Usually, instead of filling in the squares, the designer simply marks the squares with a cross or dot.

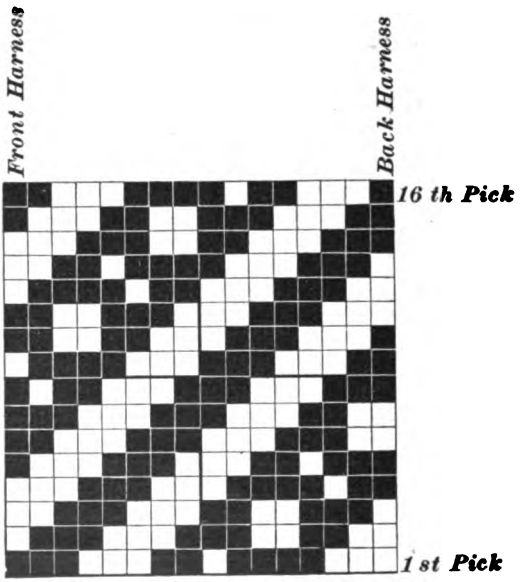

FIG. 9

When building a pattern chain, it is important to know which is the first pick of the draft and which vertical row of squares represents the first, or front, harness. This is usually indicated on the draft by the designer in some arbitrary manner, sometimes by placing a cross at the corner of the draft. If not indicated, it is safe to assume that the horizontal row of squares at the bottom represents the first pick and the vertical row of squares at the left the manner of operating the first harness at the front of the loom. The pattern chain must be so built that the bar representing the

Digitized by Google

first pick will be the first to be presented to the chain cylinder and the sinkers or risers operating the first harness will be at the front of the loom.

Shedding mechanisms are sometimes placed on the right-hand side of the loom and sometimes on the left, and in building pattern chains for looms in which the construction of the pattern chain is not such that it will permit both sides to run on the chain cylinder, these points must be taken into consideration. In building pattern chains for the Knowles head-motion, or for any similar shedding mechanism in which the construction of the pattern chain is such that either side may be run on the chain cylinder, it is not necessary to take so many precautions. In this case all that is necessary is to read the chain draft and build the chain from left to right. It makes no difference whether the bottom horizontal row of squares of the chain draft representing the first pick is the first bar of the chain built and the next to the bottom the second bar, etc. since the pattern chain for a Knowles loom may be reversed end for end. Fig. 10 shows the chain built after this manner for the draft in Fig. 9 in the position it would be when placed on the loom, and as shown is arranged to be applied to a loom with the head-motion on the right-hand side; but if desired to be placed on a loom with the head-motion on the left, all that would be necessary would be to turn the chain over and run the other side to the chain cylinder. It will be readily understood that the above statements in regard to building chains for the Knowles loom are correct if the construction of the chain is remembered. This construction, with circular rollers threaded on round spindles, is such that there is no right side to the chain, and the back may be used for the front or the front for the back, the chain being placed on the loom in any desired position. It will be noted particularly, however, that the chain must be placed on the loom in the correct position so that the bar representing the first pick will be first presented to the vibrator levers and the bar representing the second pick next brought under them, etc. The construction of the chain shown in Fig. 10 should be noted.

Digitized by Google

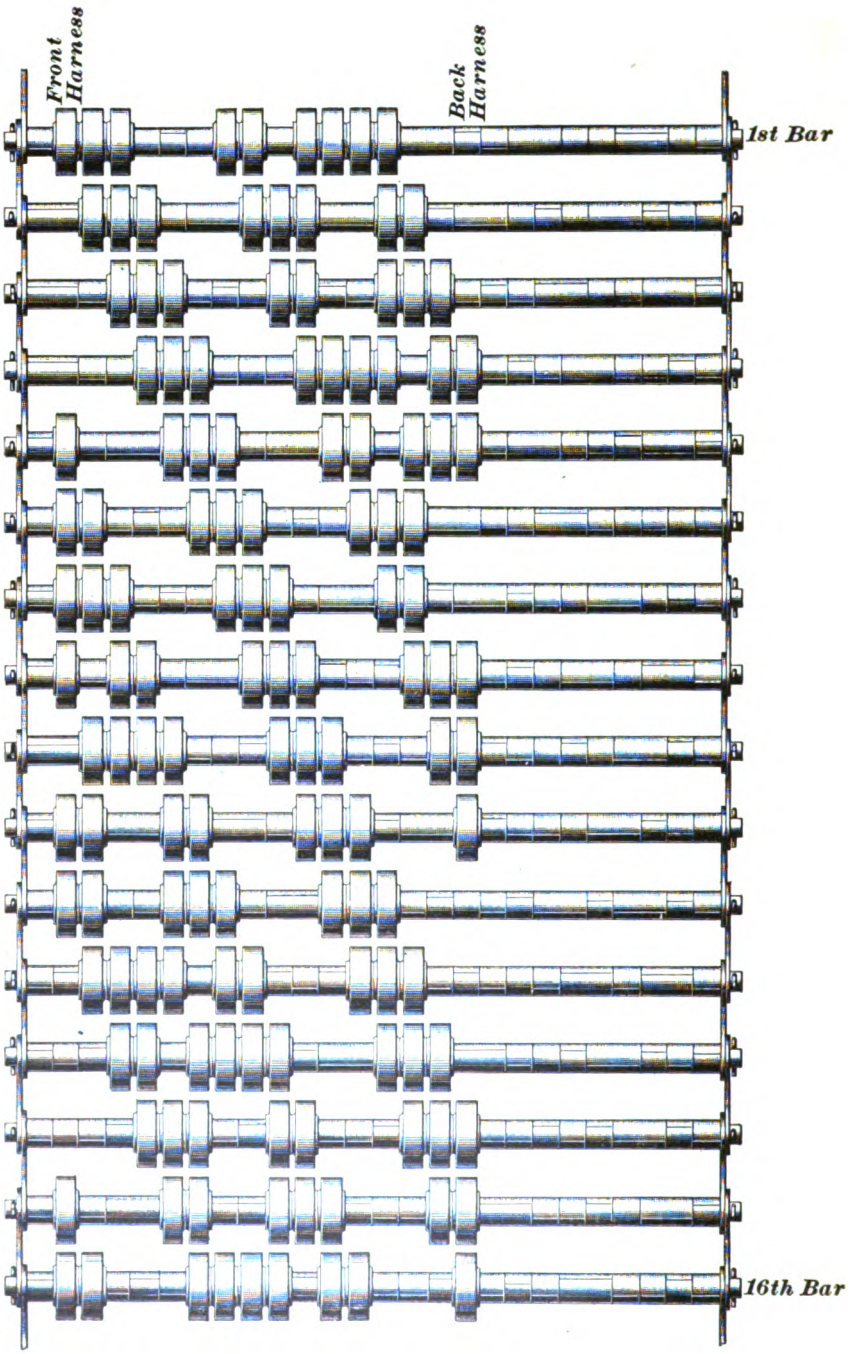

FIG. 10

Digitized by Google

BOX MOTION

15. The great majority of the looms employed in weaving woolen and worsted fabrics, and especially those in which fancy patterns are developed, are what are commonly known as 4 × 4 pick-and-pick looms; that is, there are four shuttle boxes on each side of the loom and each picker stick is thrown in at every revolution of the crank-shaft. By this arrangement it is not only possible to operate more than one shuttle (which is impossible with a single-box loom), but it is possible to drive the shuttle from either side of the loom at any pick, thus allowing a single pick of any color of filling to be inserted in the cloth. This latter is impossible with that type of looms having movable boxes on one side only and a single fixed box on the other—known as 4 × 1, 6 × 1 looms, etc.—since the shuttles must always come to rest on the box side of the loom and any shuttle can therefore place only an even number of picks in the cloth.

The object of the **box motion** is to allow shuttles carrying different kinds or colors of filling yarn to be presented to the picker in a definite order of rotation so that the required filling pattern will be woven into the cloth. There are two types of box motions—the *rotary* and the *drop-box motions*, the latter being by far the more widely used and in fact the only motion applied to American-built looms. In a drop-box loom a number of shuttle boxes are constructed one above the other and placed at one or both ends of the lay, being operated by a suitable mechanism so that any box may be raised or lowered until it becomes level with the race plate and the shuttle that it contains is in position to be operated on by the picker.

16. The Knowles 4 × 4 box motion, which is applied to the fancy loom shown in Figs. 1 and 2, raises and lowers the boxes of the loom by means of a simple mechanism; the desired motion is obtained by means of cylinder gears and vibrator gears in exactly the same manner as the harnesses are operated. Fig. 11 is a perspective view of the box

Digitized by Google

motion as seen from the rear of the loom. Four vibrator gears b_6 are placed between two cylinder gears a_7, a_8 that are setscrewed to the harness cylinder gears a, a_1, the ends of the latter being recessed so that the box cylinder gears may

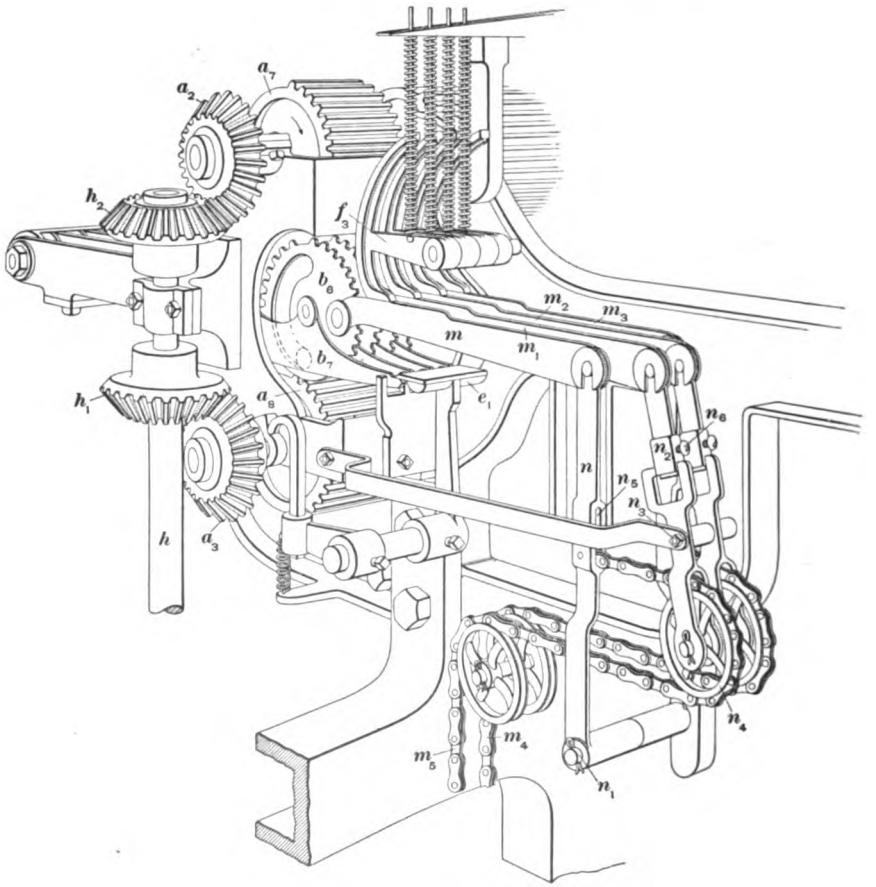

FIG. 11

be inserted in them for a distance of 2 or 3 inches, see Fig. 6 (*a*). By fastening the box cylinder gears in this manner, it is possible to change their position in relation to the harness cylinder gears so that the boxes can be made to

Digitized by Google

operate earlier or later with reference to the shed. The vibrator gears have vibrator levers b, and connectors m, m_1, m_2, m_3 and are operated by a box chain built of risers and sinkers in exactly the same manner as the harness chain, except that it is narrower, being only wide enough to carry four rollers or washers to operate the four box vibrator levers. The mechanism is so connected to the boxes that the two vibrators on the right of a person standing at the side of a loom and facing the head-motion operate the boxes on the right-hand side of the loom, while the two vibrators on the left operate the boxes on the left-hand side. Of each of these two the outside vibrators, to which the connectors m, m_3 are fastened, are arranged to raise the boxes on their respective sides of the loom the distance of one box, while the inside vibrators, to which the connectors m_1, m_2 are attached, will raise the boxes the distance of two boxes. If both vibrators that operate the boxes on one side of the loom are raised, so that the connectors m, m_1 or m_2, m_3 are operated, the boxes on that side of the loom will be raised the distance of three boxes, or from the first to the fourth, but if both are left down the first box will be level with the race plate. This is not due to any difference in the length of the throw of the connectors, but to the method of operating the lifting chains m_4, m_5 that transmit the motion of the vibrators to the boxes on each side of the loom.

In explaining the method of accomplishing this, reference will be made to the method of operating the chain m_5 that operates the boxes on the right-hand side of the loom, since the chain m_4 is operated in exactly the same manner by the two vibrators on the left. The chain m_5 is attached to a lever n fulcrumed on a stud n_1 and also attached to the connector m. If the vibrator gear to which m is fastened is raised by a roller on the box chain, it will come in contact with the top cylinder gear a, and receive a half revolution, thus drawing in the connector m and the top of the lever n and, as the chain is attached to this lever, raising the boxes. The distance that the chain is moved in this instance will be exactly enough to give the boxes a lift of one box. Suppose,

Digitized by Google

however, that the second vibrator gear, which is fastened to the connector m_{11}, is raised, the connector m_{11} will draw in the top of the lever n_9, which is fulcrumed at n_3 and carries a loose flange pulley n_4 around which the box chain is passed. This motion of the lever n_9 will have the effect of forcing out the pulley n_4 and giving the box chain and boxes just twice the lift that was given in the former case. It will be readily seen that if both vibrator gears were raised, the boxes would receive the combined lift of both levers, or three boxes. Since the boxes on the other side of the loom are operated in the same manner, it will be seen that any one of the four boxes on either side may be called to the race plate by placing proper risers and sinkers on the box chain. There is a separate lock knife e_1 fastened on the same shaft as the lock knife for the shedding mechanism, for the purpose of locking the box vibrator levers while the vibrator gears are being turned by the cylinder gears. Each box vibrator connector is provided with a hammer, or follower lever, f_9 exactly the same as those used in the shedding motion, to prevent the vibrator gears from rebounding.

As previously stated, the motion of the box levers is communicated to the boxes by the lifting chains m_4, m_8, which pass over idle pulleys m_{11}, Fig. 2, and are connected to the boxes as shown in Fig. 12. It will be noted that although the connections between the box levers and the boxes are spoken of as chains, they really consist of chains combined with rods wherever it is not necessary for the chain to run over a pulley. Both lifting chains m_4, m_8 are brought to the front of the loom around two pulleys m_6, from which the chain for the boxes on the right passes over pulleys m_7, m_9, while the chain for the boxes on the left passes over a pulley m_9, across the loom just beneath the lay, and over a pulley m_{10}. The boxes o are free to move in a vertical direction between guides at the ends of the lay, and at the bottom of each set of boxes a lifting, or box, rod o_1 is fastened. The box chain is fastened to a casting o_3 that is loose on the lifting rod, and the boxes are supported on a strong spring o_9 resting on this casting. The object of connecting the box chains to the

Digitized by Google

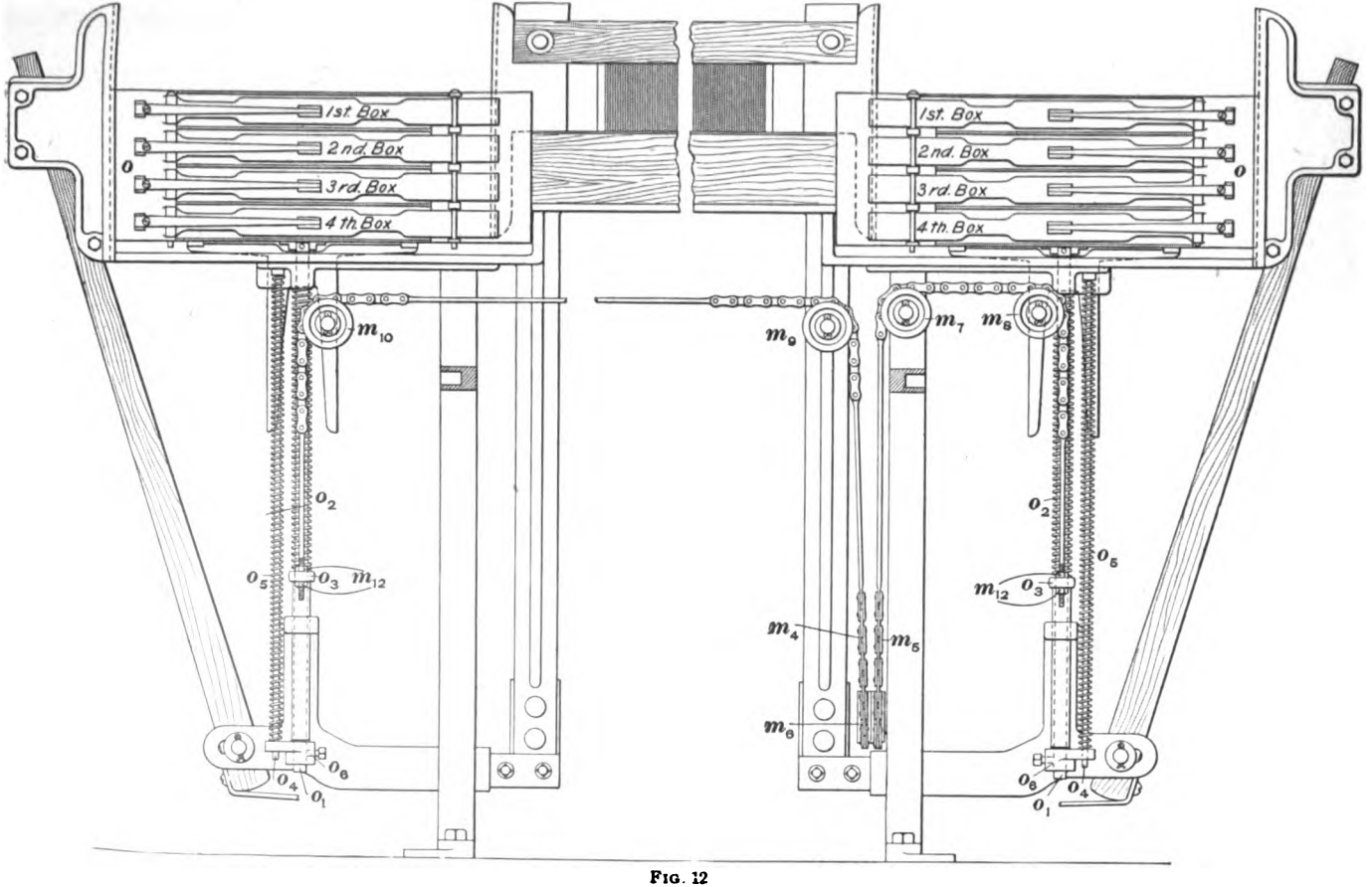

FIG. 12

Digitized by Google

boxes in this manner is to prevent any breakage, since if the boxes become caught or the picker does not get back far enough to clear the slot in the box before the latter commences to lift, the spring will be compressed.

17. While the shedding motion is positive, raising and lowering the harnesses, the box motion is non-positive, simply raising the boxes. The boxes are lowered by their own weight aided by a spring o_8 on a rod o_4 that is fastened to the lay at its upper end, while its lower end extends through a casting o_6 setscrewed to the lifting rod. As the boxes are raised the spring is compressed, and as the vibrator slackens the chain when the box is to be lowered the spring aids the weight of the boxes in bringing them down. It will also be seen that there would be some liability of the boxes rising slightly above the race plate and falling back again when lifted if it were not for this spring, which prevents vibration of the boxes and makes their motion smooth and reliable.

MULTIPLIER

18. When a large number of picks of one color are to be inserted in a fabric, it is of great advantage if a loom is equipped with some mechanism whereby the box chain can be stopped for a certain length of time, holding the boxes stationary while those picks are being placed in the cloth. Such a mechanism is known as a **multiplier motion,** since it does away with the necessity of building long and heavy box chains, by multiplying the number of picks that certain bars will place in the cloth.

The Knowles multiplier is shown in Fig. 13. The box chain is carried on the box-chain cylinder d_4, which is fastened to a sleeve d_5 loose on an extension d_3 of the shaft of the harness-chain cylinder; a star gear d_6 is also fastened to this sleeve. Another sleeve p, which also is loose on the shaft d_3, carries another star gear p_3 and the multiplier-chain cylinder p_1. Two sliding pieces q, r are placed on a sleeve s_3 on a stud s. The sleeve s_3 is driven from the gear a_8 by means of a gear a_{10}, Fig. 1, a shaft a_{11} extending across the

Digitized by Google

head, a gear a_{11}, and a gear s_1 fastened to the sleeve. This sleeve is geared so that it makes one revolution at each pick of the loom, and the sliding pieces q, r are keyed to it so as to have a rotary motion imparted to them by the shaft and still be capable of being slid along the shaft so that the pins q_1, r_1 will engage with or be disengaged from the star gears. This lateral motion of the sliding pieces is obtained by means of two yokes q_2, r_2 that engage with grooves in them and are setscrewed to two sliding rods q_3, r_3. The

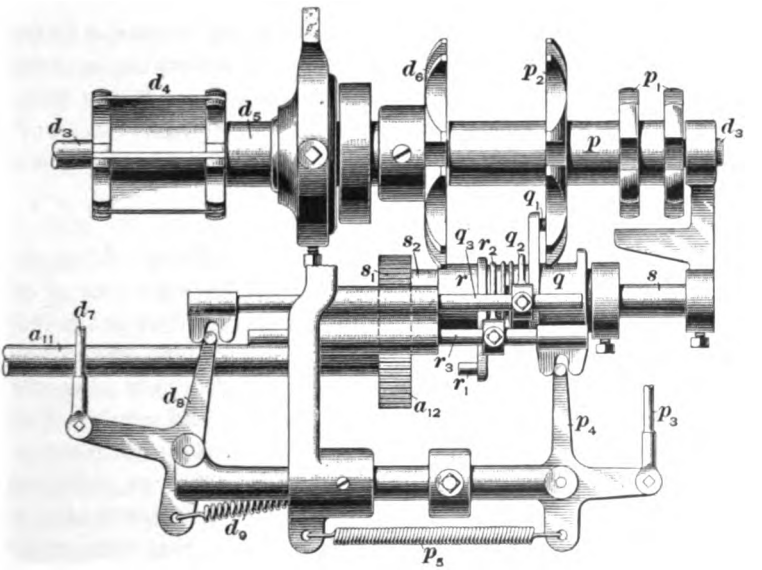

FIG. 13

sliding rod q_3 is operated by means of a rod d_7 and a lever d_8 engaging with a notched piece on the end of the rod. The rod d_7 is raised by means of a long spindle with which each bar of the box chain that is to be multiplied is built, as shown in Fig. 16; this spindle is forced under the run of a lever to which the rod is attached, when that bar of the chain is brought under the vibrator levers of the box motion. It should be particularly noted that only those bars of the box chain that are to be multiplied are built with the long

Digitized by Google

spindle, bars that are not to be multiplied being built with a spindle only sufficiently long to pass through the links that hold the chain together. The rod r_3 is operated by a lever p_4 and a rod p_3 that is connected to a lever, shown in Fig. 2, operated by risers on a multiplier chain placed on the multiplier-chain cylinder p_1. The multiplier chain, shown in Fig. 17, is built of spindles joined by links exactly the same as the box and pattern chains, except that the multiplier chain is only wide enough to contain one riser for raising the rod. It may be built in any manner that is desired, the number of bars indicating the number of picks that will be placed in the cloth before the boxes will change again; for instance, if the multiplier chain is made with five sinkers and one riser, 6 picks will be placed in the cloth before the box chain moves; if built with nine sinkers and one riser, 10 picks will be inserted, etc.

19. The action of the multiplier is as follows: After the box and multiplier chains have been built they are placed on their respective cylinders. Each bar of the box chain that is to be multiplied is built with a long spindle projecting under the lever that raises the rod d_7. Suppose that the multiplier chain is built with nine sinkers and one riser so that it will multiply the bar of the box chain ten times. During the ordinary running of the box chain, it is driven so that one bar is moved under the box vibrator levers at each pick of the loom by means of the pin r_1 that is fastened to the sliding piece r on the shaft and engages with the cut-outs in the star gear d_6. While the box chain is in operation, the riser on the multiplier chain remains stationary directly under its vibrator lever, so that the rod p_3 that is attached to this lever will remain in its highest position and keep the pin r_1 in contact with the star gear d_6. When a bar having a long spindle is brought up, the end of the spindle raises the rod d_7, which throws the pin q_1 on the sliding piece q into the cut-outs of the star gear p_2, thus starting the multiplier chain. At the same time, the riser on the multiplier chain moving from under the lever that

Digitized by Google

holds up the rod p_1 allows the spring p_6 to pull down the rod and disengage the pin r_1 that has been driving the box chain. The loom now runs 10 picks (or any other number, according to how the multiplier chain is built) with one bar of the box chain under the box vibrator levers. When the riser on the multiplier chain comes around again, the rod p_3 is raised and the pin r_1 being thrown in contact with the star gear d_6 starts the box chain again; at the same time, the rod d_7 being lowered as the lever passes off the end of the long spindle allows the spring d_6 to pull the pin q_1 from contact with the star gear p_6 and stop the multiplier chain. The loom will now continue to run and the box chain to revolve in the ordinary manner until another bar built on a long spindle is brought around.

TIMING THE BOX MOTION

20. To time the box motion, the lay is first brought forwards so that the dagger of the protector motion is up to the frog under the breast beam. Have the clutch at the bottom of the upright shaft locked and loosen the setscrews that fasten the small spur gear to the crank-shaft of the loom. Arrange the box motion so that the boxes will receive their full lift, that is, from the first to the fourth box; then turn the head-motion forwards by means of the crank on the top cylinder-gear shaft until the boxes rise so that when there is no shuttle in the top box the binder of the second box will just touch the protector finger, which should raise the box about $\frac{1}{4}$ inch. This times both the box and harness motions, but if at any time it is desired to change the timing of the shedding motion so that the harnesses will start earlier or later with reference to the box motion, it is simply necessary to loosen the setscrews in the harness sections of the cylinder gears and turn them forwards or backwards, taking care that the same change is made in both the top and bottom cylinder gears; that they always stand in the same relative position; and that the starting teeth always engage the teeth of the vibrator gears at exactly the same time. This does not disturb the box motion in any way and no further adjustment is necessary.

Digitized by Google

LEVELING THE BOXES

21. In leveling boxes on a Knowles 4×4 loom, it is best to first level all the boxes on one side of the loom before beginning on the boxes on the other side. The method usually adopted is to begin with the boxes on the head end of the loom. The method of procedure is as follows: First bring the top, or first, box exactly level with the race plate by adjusting it with the nuts m_{11}, Fig. 12, on the small wrought-iron rod, which is riveted to the end of the chain m_8 near the lower end of the box rod. Then move the boxes from the first to the second box by raising the lever n, Fig. 11. Loosen the nut that holds the end of the chain m_8 in place in the slot n_8 in the lever n and adjust the second box by raising or lowering the end of the chain in the slot, according to whether more or less motion is wanted. Then bring the first box level with the race plate again, as the adjustment of the second box may have thrown out the first box a trifle. Keep moving the boxes from the first to the second until both are exactly right; then move from the first to the third by raising the lever n_8 and adjust the third box by loosening the setscrew n_8 and moving up or down the upper arm of the lever until the box is level. Keep moving the boxes from the first to the third until both are exactly right, since the adjustment of the third box may have thrown out the first. Next raise both levers together for the fourth box. If the other boxes are right, the fourth box should be level with the race plate without further adjustment. If not, the motion of the boxes may have to be divided a little. A very slight change in the lever n_8 that brings the third box level with the race plate will be found to make a considerable difference. The boxes on the opposite side of the loom are adjusted in exactly the same way by making similar adjustments on the levers that operate them.

In leveling the box, it will save considerable time to put on a box chain built especially for this purpose so that it will be only necessary to move the box-chain cylinder a bar or two in order to get the box desired.

Digitized by Google

Sometimes the chain that connects the boxes with the box mechanism becomes worn in some places more than others on the side that runs on the guiding sheave pulleys. When this is the case, difficulty is sometimes experienced in leveling boxes; in such cases, it is well to take off the chain and turn it over, letting the other edge run on the pulleys.

BUILDING BOX CHAINS

22. In building box chains for pick-and-pick looms, that is, looms in which both picker sticks are thrown in at each pick, considerable care must be exercised in order to prevent smashes. For instance, if the chain were built so that boxes containing shuttles were presented to both pickers at the same time, the result would be that the shuttles would meet in the shed, where one would probably be deflected, and flying from the loom would be liable to break out the warp or do other damage. Sometimes both shuttles will strike each other squarely and stop dead in the shed; in this case the protector usually stops the loom so as to prevent a smash, but the shuttle points are usually so badly battered as to render it necessary to have them ground down. Should the protector fail to work in a case like this, the worst smash possible will result, since the warp will be broken out for a distance equal to the length of two shuttles. Therefore, it will be seen that in building box chains for pick-and-pick looms it is of vital importance to have an empty box on one side of the loom at each pick. In cases where five and six shuttles are run in looms having only four boxes on each side the difficulty of arranging the box chain so as to accomplish this will be recognized, since there can be, in the case of five-shuttle work, only three empty boxes, and with six shuttles only two empty boxes. Care should also be taken to build the box chain so that there will be as few jumps, that is, movements of two or more boxes, as possible, as this places undue strain on the loom and causes it to absorb more power. Jumps or drops of two boxes, that is, from the first box to the third or the second to the

Digitized by Google

fourth or vice versa, are not too hard on the loom and in building many box chains must be used, but jumps from the first to the fourth or drops from the fourth to the first box should always be avoided, and in the great majority of filling drafts there is no necessity for them. If a movement of two boxes must be made, it is always better to arrange the chain so that a drop will be made rather than a jump.

23. To illustrate the method of building a box chain, suppose that it is desired to build a box chain to operate five shuttles in a Knowles 4 × 4 loom, the colors to be placed in the cloth after the manner indicated by the filling draft in Fig. 14. The best method of building a chain and a method that will not render mistakes liable to occur is to rule two sets of squares as shown in Fig. 15, each set to contain as many vertical rows as there are boxes on that side of the loom. The set of squares on the left in Fig. 15 represents the boxes on the left of the loom, while that on the

Red	4		4																	= 8
Brown		8		2		5		2		5					5		2		5	2	=36
Orange					1		1											1		1	= 4
Fawn									1		1		2		1		1				= 6
Green												1		1							= 2
Total Number of Picks in Pattern																					56

FIG. 14

right represents the boxes on the right of the loom. The vertical rows in each set are numbered at the top to represent the boxes; thus, the vertical row of squares in the set of squares on the left, marked *1*, represents the top, or first, box on the left of the loom, while the vertical row in the set of squares on the right, marked *2*, represents the second box on the right of the loom, etc. The colors of filling carried by the shuttles are indicated by their initial letters. If more convenient a piece of design paper may be used, but in either case it is desirable to leave a sufficient space between the two sets of squares for representing the box chain, which will also require four vertical rows of squares.

When starting the chain, any color may be placed in any box, but it is always best to place them so that the chain can

Digitized by Google

be made with as few jumps as possible. As shown in Fig. 15, the shuttle that carries the red filling has been placed in the first box on the left-hand side of the loom and the brown in the second box. On the other side of the loom the orange has been placed in the first box, the fawn in the third, and the green in the fourth. Referring to Fig. 14, it will be seen that the pattern first calls for 4 picks of red to be placed in the cloth. The shuttle that contains the red is therefore passed across the loom from the first box on the left-hand side to the second box, which is the only empty box on the other side, and back again four times, working from the top of the vertical rows of squares downwards and utilizing as many horizontal rows of squares as there are picks inserted, in this case 4. This is indicated by the crosses on the squares representing those boxes, each horizontal row of squares representing 1 pick. It will be noticed that the square in which the shuttle was left after the 4 picks had been inserted is marked *R*. This must be done with each color, since it affords a means of quickly telling in which box each color was left and prevents arranging

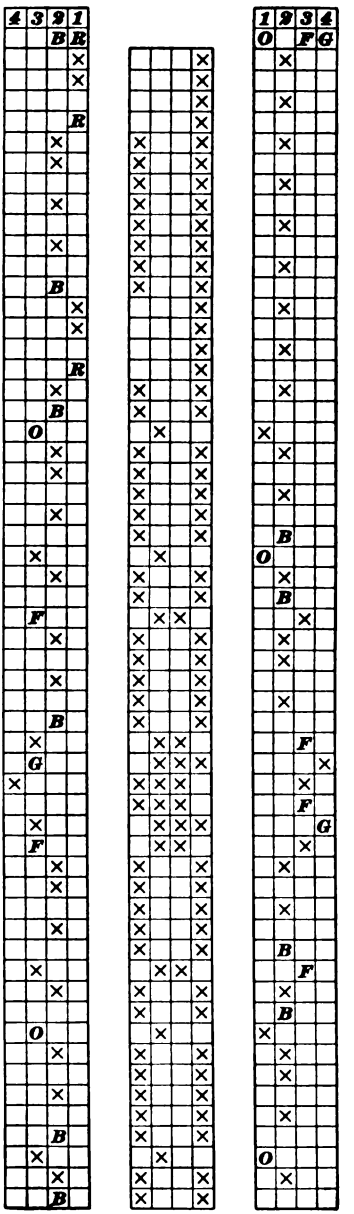

FIG. 15

for another shuttle to be thrown into that box. Next, 8 picks of brown are inserted, the shuttle passing back and forth between the second boxes on each side, and so on, each color being called according to the filling draft. The crosses indicate the box into which the shuttle is thrown at the completion of each pick with the exception that whenever a new color is introduced a cross is placed on the first pick of that color in the square representing the box that the shuttle starts from, as well as in the square representing the box that the shuttle enters at the completion of the pick. For instance, on the first pick of the draft, where red begins, a cross is placed in the square representing the first box on the left, where the shuttle starts, as well as in the square representing the second box on the right, where the shuttle rests at the completion of the pick. In the same way on the fifth pick, which is the first pick of brown, crosses are placed to indicate the box from which the shuttle starts and the box in which it rests after that pick. An important point to be noted is that when the draft is completed all the shuttles must be left in the boxes in which they started, even if it is necessary to build a repeat of the chain; otherwise a smash is sure to occur. It will be noted that in Fig. 15 there are no jumps or drops, the shuttles on either side moving only one box between any colors, and also that the colors are all left in the boxes in which they started.

24. Having worked out a good system of operating the boxes, it is a comparatively easy matter to arrange the box chains to lift the desired boxes. This may be done on four vertical rows of squares between those representing the boxes at each end of the loom. It will be assumed that the first vertical row of squares at the left on which the box chain is to be shown represents the vibrator lever that raises the second box on that side of the loom and the second lever raises the third box. For the boxes at the other side, the first lever at the right will raise the second box and the second lever from the right the third box. It will be remembered that two washers operating both levers that

Digitized by Google

govern the boxes on either side will call the first box on that side and that two rollers will call the fourth box on that side. Each horizontal row of squares across the box chain represents a pick of filling or one bar of the box chain; consequently, to indicate how the box chain is to be built, it is simply necessary to indicate what levers are to be raised in order to call the boxes indicated on the drafts at each side. For instance, on the first 4 picks the second box on the right and the first box on the left are called; on the next 8 picks the crosses indicate that rollers must be placed on the chain to call the second boxes on each side, and so on. When building the chain it should be noted which box vibrators operate the boxes on each side of the loom, and care should also be taken when placing the shuttles in the loom to start them on the proper side and in the proper boxes; otherwise a smash cannot be avoided.

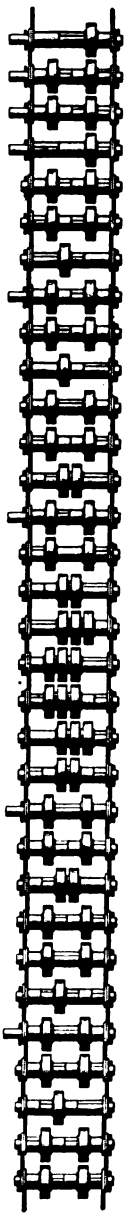

FIG. 16

25. Multiplier.—By referring to the filling draft in Fig. 14 it will be seen that a 4-pick multiplier (that is, one built with every fourth bar a riser) will save the most bars. Therefore, in every part of the box chain where there are four successive bars calling the same boxes, only one is necessary, this being threaded on one of the long multiplier bars. Fig. 16 shows the appearance of the completed box chain for the draft in Fig. 14, and Fig. 17 shows the multiplier chain that would be used. Two repeats of the latter, as shown, would be necessary in order to encircle the multiplier-chain cylinder on the loom. It will be noted that if this chain were to be built without utilizing the multiplier motion, or for a loom without a multiplier motion, as many bars would be required as there are picks in the pattern, in this case fifty-six bars; but by building the short multiplier chain,

Digitized by Google

Fig. 17, the boxes may be operated by a box chain of only thirty-two bars, as shown in Fig. 16. On many patterns the amount of labor saved in building the box chain would be much greater than in this particular case.

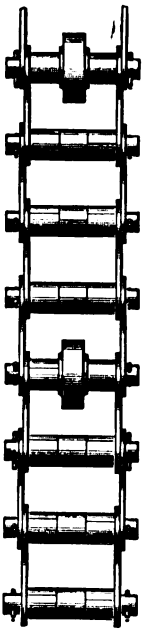

FIG. 17

PICKING MECHANISMS

EQUALLY AND UNEQUALLY GEARED PICKING MOTIONS

26. The picking motion on box looms having drop boxes on each end of the lay is generally arranged to operate both pickers at each revolution of the crank-shaft, so that the shuttle may be thrown in either direction on any pick. There are two methods employed to accomplish this result.

In the first method the crank- and bottom-shaft gears are made with the same number of teeth, so that the bottom shaft will make a revolution to each revolution of the crank-shaft. In this case both pick balls are fastened on the same side of the bottom shaft, and both will consequently strike their respective picking shoes simultaneously. Looms having this arrangement are known as **equally geared looms.**

In the second method the gear on the bottom shaft has twice as many teeth as the gear on the crank-shaft, so that the former makes only 1 revolution while the latter makes two. In order to throw each picker stick in at every revolution of the crank-shaft, it is necessary in this case to have two pick balls on each side of the loom. These, of course, are set diametrically opposite each other, so that one ball on each side of the loom will throw each picker stick in at every half revolution of the bottom shaft. Looms having this arrangement are known as **unequally geared looms.**

Aside from the arrangement of the gearing and pick balls there is no other difference in the picking motions of equally

Digitized by Google

and unequally geared looms except in the shape of the picking shoe. In the former case, the picking shoe has a slow, easy curve, owing to the speed at which the pick ball moves, but in the latter case the picking shoe has a sharper and quicker curve, so that the slower speed of the pick ball may impart a blow of sufficient strength to throw the shuttle across the loom.

For very broad looms, the equally geared picking motion is to be preferred, since the greater speed of the pick ball enables a greater impulse to be imparted to the shuttle by means of a properly shaped shoe, but for narrow looms the unequally geared motion gives a smooth, steady pick, provided that both pick balls are equidistant from the center of the bottom shaft. If an unequally geared loom has only one pick ball on each side, it is not a pick-and-pick loom, but is known as an **alternate pick loom.** In this case the pick balls must be set diametrically opposite each other so that the picker sticks will work alternately, one being thrown in on one pick and the other on the next, and so on. This motion is generally used on single-box looms.

SLIDING PICK MOTION

27. Many Knowles pick-and-pick looms are equipped with the **sliding pick** arrangement, which is a mechanism applied to the picking motion by means of which it is possible to operate the picker sticks alternately, either stick being thrown in for one or as many picks as desired, while the other remains at rest. For instance, suppose that four shuttles are to be thrown from one side of the loom to the other in succession; with the sliding pick arrangement this side of the loom can be made to pick four times while the picking motion on the other side of the loom remains at rest for an equal number of picks. Or, on the other hand, suppose that one shuttle is to be thrown back and forth across the loom for a number of picks, the picking motion on each side of the loom can be made to operate alternately. No matter how the filling pattern is arranged or at which side of

Digitized by Google

the loom the next shuttle to be picked is at rest, with this motion it is only necessary on any pick to operate the picking motion on the same side of the loom as the shuttle that is to be thrown, leaving the other picking motion at rest. By this means not only is the amount of wear and tear on the picking motions reduced by one-half, but the liability of bad shuttle smashes is also eliminated, since when only one picker stick is in operation, it is impossible for two shuttles to meet in the center of the shed.

An illustration of the sliding pick mechanism as arranged for an unequally geared loom is shown in Fig. 18 (*a*). The picking balls k_7, n_7 are mounted on arms k_8, n_8 loosely supported on the bottom shaft of the loom, but having the characteristic rotary motion imparted to them by means of projections k_9, n_9 that extend into slots in the castings k_6, n_6, Fig. 18 (*b*), keyed to the bottom shaft. The hubs of the arms that support the pick balls are grooved so as to be engaged by yokes r_4, r_5 connected by a rod r_6. The yoke r_5 forms part of an elbow lever j_7, which when raised will throw the casting k_8 and pick balls k_7 directly over the picking shoe k_{10}, thus imparting motion to the picker stick on that side of the loom, and at the same time, by means of the rod r_6, will draw the casting n_8 and pick balls n_7 from the picking shoe n_{10}, so that the pick balls, although still revolving, will not impart motion to the shoe and picker stick on that side of the loom. When the lever j_7 is depressed, the motion will be reversed and the loom will pick from the other side, while the picking motion that was previously in operation will remain at rest. Motion is imparted to this mechanism by means of an extra, or fifth, vibrator gear b_8 placed between the box-motion cylinder gears a_7, a_8 of the head-motion. This vibrator gear is operated by risers or sinkers placed on the box chain so as to raise or lower the vibrator lever b_9, and imparts motion to the connector b_{10}, which is connected to one arm of an elbow lever j_4; a casting j_8 is fastened to the other arm of the elbow lever j_4 and supports a rod j_9 connected to the previously mentioned elbow lever j_7. By means of this arrangement, a riser on

Digitized by Google

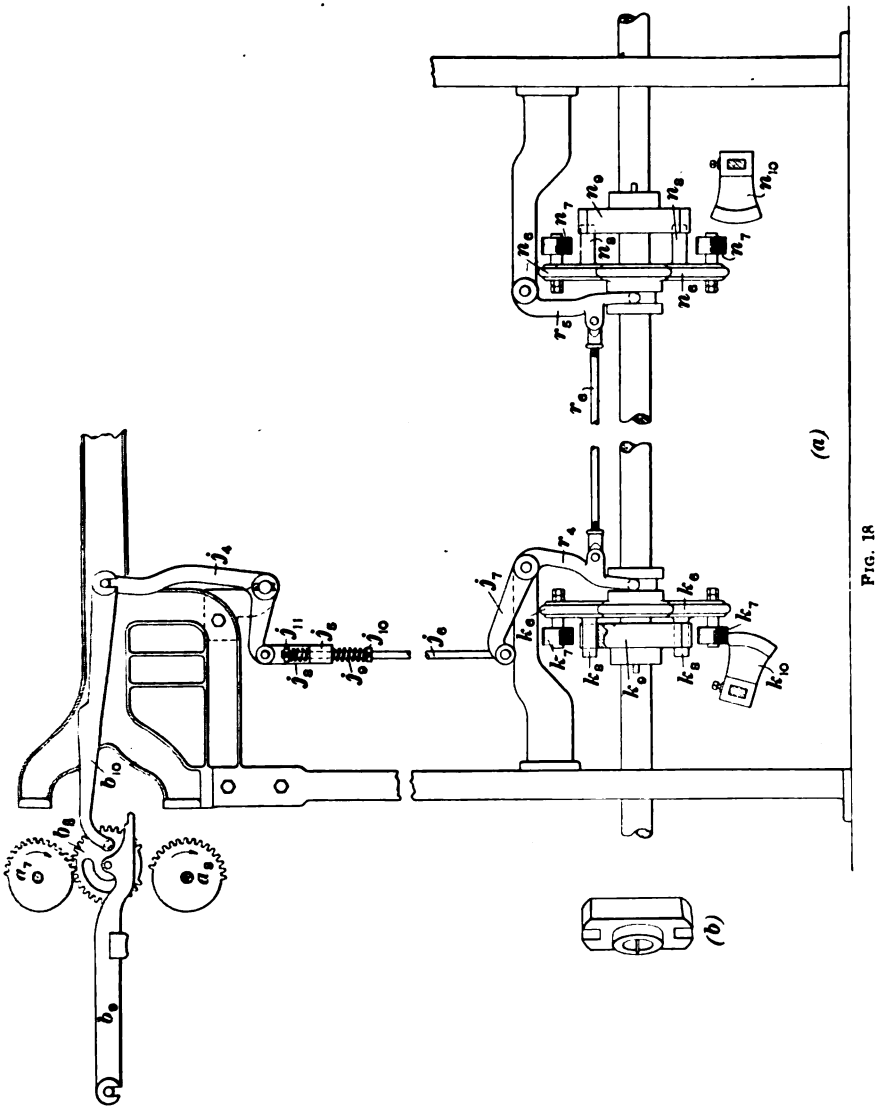

FIG. 18

Digitized by Google

the chain will throw the picking motion in on one side and out on the other, while a sinker on the chain will reverse the action. The rod j_8 is not fastened in a fixed position to the casting j_8, but passes through a hole in the same and is held in position by two springs j_9, j_9 and adjustable collars j_{10}, j_{11}. This makes an elastic connection in each direction that will prevent any breakage of the parts in case the motion is operated when the loom is stopped with the bottom shaft in such a position that the pick ball will strike against the side or edge of the picking shoe.

TAKE-UP MECHANISMS

THE RATCHET RING TAKE-UP MOTION

28. Fancy woolen and worsted looms are sometimes equipped with positive and sometimes with conditional take-up motions. The take-up motion applied to the loom shown in Fig. 2 and illustrated in detail in Fig. 19 is known as the **ratchet ring take-up motion** and may be arranged as either a positive or a conditional motion, as desired.

When this style of take-up motion is employed, the cloth passes from the breast beam around the take-up roll v, over a loose iron roll v_1, and is finally wound on the cloth roll w. The loose roll v_1 is for the purpose of leading the cloth around the take-up roll so that a greater surface of the latter will be presented to the cloth. The take-up roll is wound spirally with a strip of thin sheet steel about 2 inches in width punched full of small holes. It is applied to the take-up roll with the rough side out and thus presents a rough, serrated surface that firmly grips the cloth, so that the latter is pulled down over the breast beam positively at a speed depending on the amount of motion imparted to the roll by the take-up mechanism; thus, the speed of the take-up roll governs the picks per inch in the cloth. For light fabrics a take-up roll covered with coarse sandpaper is generally used, since a perforated steel-covered roll would be too harsh and would be liable to damage the fabric.

Digitized by Google

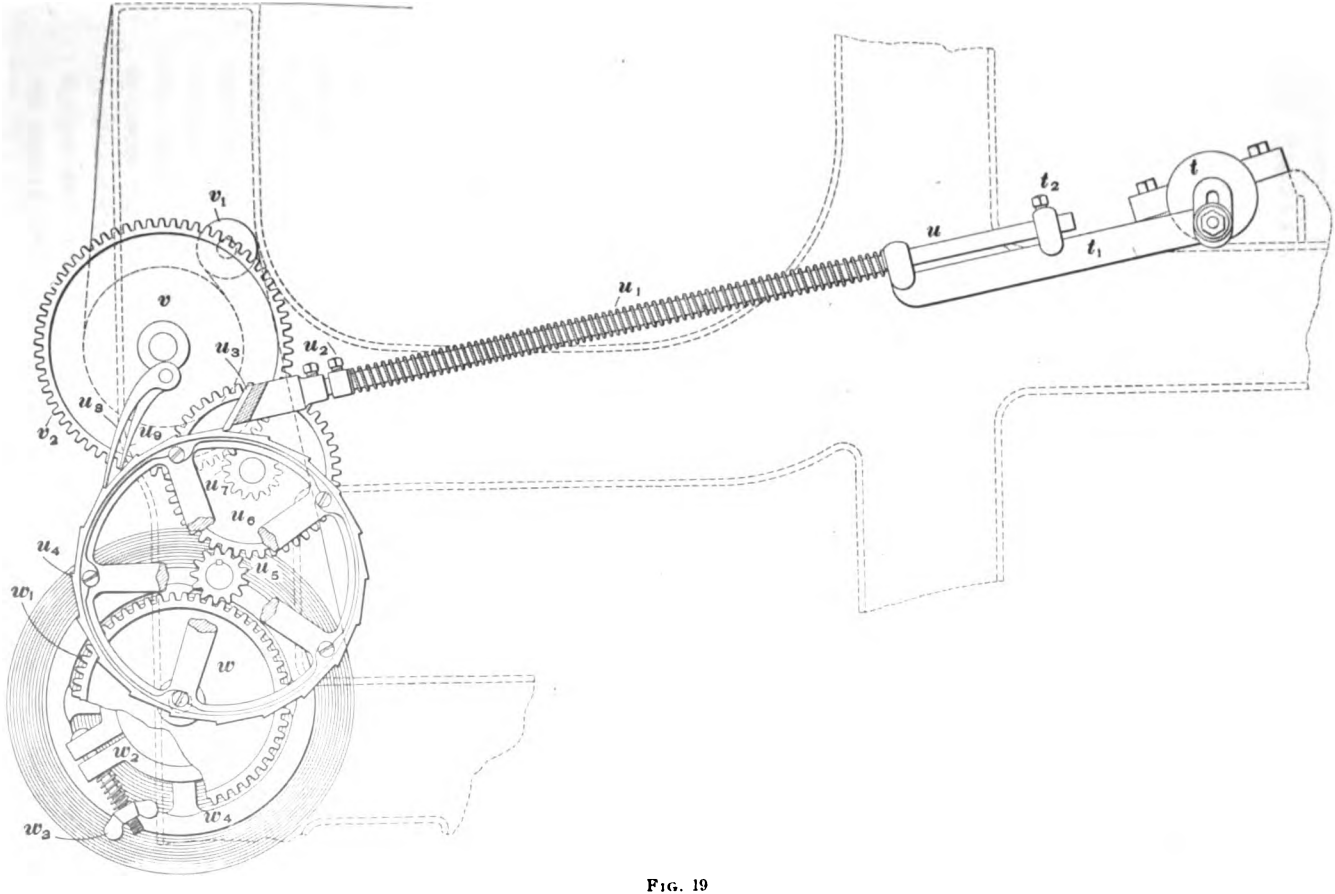

FIG. 19

Digitized by Google

A roll covered with sandpaper, however, is not suitable for heavy fabrics, since it does not grip the cloth sufficiently to prevent slippage.

Motion is imparted to the take-up roll by means of a slotted disk t that is fastened to the crank-shaft of the loom. A casting t_1 is fastened eccentrically to this slotted piece and has setscrewed to it a rod u known as the *pitman rod*. A pawl u_3 bolted to the end of the pitman rod engages with the teeth of the ratchet u_4 fastened to a short shaft carried in a bearing in the frame of the loom. On the other end of this shaft is fastened a gear u_4 that drives the gear v_5 on the take-up roll through the gears u_5, u_7. As the crank-shaft of the loom revolves, the pitman, being fastened eccentrically to the slotted casting, is worked forwards and backwards, and the pawl engaging with the teeth of the ratchet imparts motion to the same, which is transmitted by the train of gears previously mentioned to the take-up roll, thus drawing the cloth over the breast beam at a uniform rate of speed. During the backward movement of the pitman arm, the ratchet is prevented from moving back by a double set pawl constructed in two parts u_6, u_6. When one of its parts is engaged with a tooth of the ratchet, the other will rest exactly half way between 2 teeth; by this means the ratchet is prevented from turning backwards if it is thrust forwards for the space of $\frac{1}{2}$ tooth, since one or the other of the parts of the set pawl will then engage with a tooth of the ratchet.

By means of the slotted casting t the amount of eccentricity may be so varied that the motion imparted to the pitman arm will be sufficient to move the ratchet so that the set pawls will take up one, two, or in some cases where a ratchet with a large number of teeth is used, three or four teeth. The gearing driving the take-up roll is so reduced that when the throw of the pitman is adjusted so that the ratchet takes up one tooth at each pick of the loom, the number of picks per inch in the cloth will be the same as the number of teeth in the ratchet. If the ratchet takes up 2 teeth, the number of picks per inch in the cloth will be equal to one-half the number of teeth in the ratchet, etc.

Digitized by Google

Any desired number of picks per inch may be obtained by changing the ratchet for one having the required number of teeth. The rim of the ratchet is made in the form of a ring, which is fastened to the spider with screws, so that it may be removed and a rim having a different number of teeth substituted very readily.

29. As fast as the cloth is drawn down by the take-up roll it is wound on the cloth roll w, to which motion is imparted by means of the gear u_4 driving the gear w_1, which in turn imparts motion to the cloth roll by means of a friction clamp w_2. The cloth roll is driven slightly faster than is necessary to wind up the cloth, which may be wound with any degree of tension by tightening the thumbscrew w_3, which tightens the friction on the cloth roll. The tension of the cloth as it is wound on the cloth roll should, however, be slightly less than the tension of the cloth above the take-up roll, so as not to interfere with the motion of the latter, even if there is considerable back lash in the gears. The hand wheel w_4 is for the purpose of operating the roll by hand when the friction is loosened and a cut of cloth is being taken from the loom.

30. The ratchet ring take-up motion can be very readily changed to a **conditional take-up** by loosening the setscrew t_2; this will bring into action the spring u_1, which has no function whatever in connection with the positive motion. When the setscrew is loosened, the tension of the cloth tending to turn the take-up roll will compress the spring and move the rod backwards through the holes in the casting t_1. As the cloth is woven it will lessen the tension, and the spring will gradually force the ratchet forwards a tooth. When this motion is used as a conditional take-up, the number of picks per inch will depend on the tension of the warp, which of course depends on the amount of weight on the let-off motion. The number of teeth in the ratchet will have no control over the number of picks per inch when this motion is used as a conditional take-up, but more even results will be obtained if the ratchet does not have exactly or approximately the same number of teeth as picks per inch in the cloth.

Digitized by Google

WORM TAKE-UP MOTION

31. The Knowles **worm take-up motion**, Fig. 20 (*a*), is frequently used on fancy looms, and while it is not quite as convenient as the ratchet ring take-up, it has one advantage in that it is impossible for the weaver to interfere with it in any way. With the ratchet ring and similar take-up motions dishonest weavers often resort to the practice known as *pumping*, which consists of pushing the take-up ratchet along at intervals so that the cloth will be drawn over the breast beam faster than the take-up motion calls for. By this means the weaver turns off a greater length of cloth in a week, but at the expense of the evenness of the goods, since every time the take-up motion is pumped, a slight thin place is made in the cloth in consequence of fewer picks being inserted in the fabric at that point.

The worm take-up motion is driven from the bottom shaft of the loom by means of a bevel gear t that drives a bevel gear t_1 fastened on the take-up shaft t_2. On unequally geared looms, the gear t_1 has one-half as many teeth as the gear t, but on equally geared looms it is of the same size, so that in either case the take-up shaft t_2 makes one revolution to each pick of the loom. A worm u fast to a sleeve to which the hand wheel u_1 is also attached, imparts motion to a worm-gear u_2. This is accomplished by means of the handle u_3, which when pressed in, as shown in the illustration, engages with cut-outs in the flange t_3 on the take-up shaft t_2, thus enabling the motion of the shaft to be imparted to the worm. When the handle is pulled out the hand wheel and worm may be turned, and the take-up motion operated by hand, since in this case the worm is loose on the shaft. The motion of the gear u_2 is imparted to the take-up roll v by a train of gears as shown in Fig. 20 (*b*), which is a view of the gear-combination as seen from the inside of the loom. The pinion gear u_4 is fastened to the same shaft as the gear u_2 and drives a gear u_5 compounded with a gear u_6, the latter meshing with the gear v_1, which is fastened to the take-up roll v. Of this train of gears, u_2 contains 100 teeth; u_4, 16 teeth;

Digitized by Google

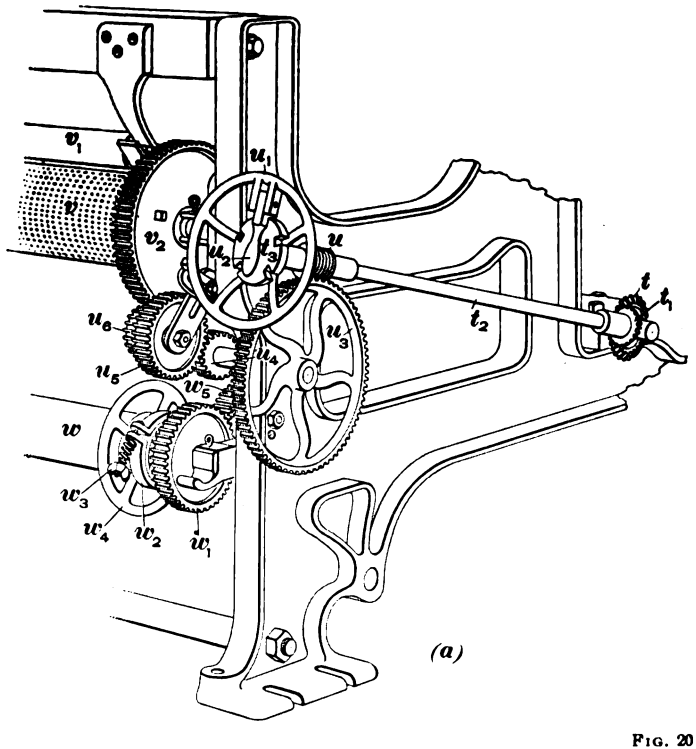

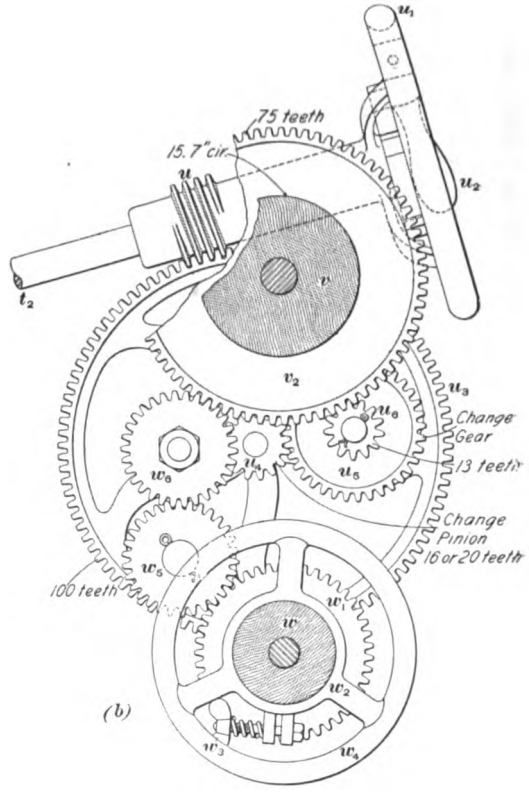

FIG. 20

Digitized by Google

u_6, 13 teeth; and v_2, 75 teeth. The gear u_4 is the change gear, the size of which may be altered so as to change the speed of the take-up roll so that the cloth will be drawn over the breast beam of the loom at the rate of speed required to give the desired number of picks per inch in the fabric. In order to find the number of teeth required in the change gear to give a desired number of picks per inch in the cloth, it is best to first find the constant for the train of gears driving the take-up roll. It will be noted that gear u_3 is moved 1 tooth for each pick of the loom, since the worm u is single-threaded and the shaft t_3 makes 1 revolution to each revolution of the crank-shaft. Then to find the constant it is only necessary to divide the product of the number of teeth in gears u_3 and v_3 by the product of the number of teeth in gears u_4 and u_6 multiplied by the circumference of the take-up roll v, which is 15.7 inches, thus $\frac{100 \times 75}{16 \times 13 \times 15.7} = 2.296$ constant.

To find the number of teeth required in the change gear, it is only necessary to divide the number of picks per inch required in the cloth by the constant. Thus, if 46 picks per inch are required, a 20-tooth change gear will be necessary, since $46 \div 2.296 = 20$ (practically). By the reverse process the number of picks per inch in the cloth may be readily ascertained by multiplying the number of teeth in the change gear by the constant. In some cases, the pinion gear u_4 contains 20 teeth instead of 16, which will make the constant for the train of gears 1.837, as shown by the following calculation: $\frac{100 \times 75}{20 \times 13 \times 15.7} = 1.837$ constant.

Table I shows the number of picks per inch in the cloth with different size change gears using 16- and 20-tooth change pinion gears. The number of picks per inch inserted in the fabric by different combinations of change and change pinion gears as shown in the table is the correct calculated number for average fabrics and conditions, but in some cases a slight variation may be found from the number of picks stated in the table. This is caused by the different rates of contraction exhibited by fabrics of different constructions

Digitized by Google

TABLE I

Number of Picks per Inch	Pinion Gear Teeth	Change Gear Teeth	Number of Picks per Inch	Pinion Gear Teeth	Change Gear Teeth	Number of Picks per Inch	Pinion Gear Teeth	Change Gear Teeth	Number of Picks per Inch	Pinion Gear Teeth	Change Gear Teeth
26	20	14	57	20	31	81	20	44	112	20	61
28	20	15	59	20	32	83	20	45	114	20	62
29	20	16	60	16	26	85	16	37	115	16	50
31	20	17	61	20	33	86	20	47	116	20	63
33	20	18	62	16	27	87	16	38	117	16	51
34	16	15	64	16	28	88	20	48	118	20	64
35	20	19	66	20	36	89	16	39	119	16	52
37	20	20	67	16	29	90	20	49	122	16	53
38	20	21	68	20	37	92	20	50	124	16	54
39	16	17	69	16	30	94	16	41	126	16	55
40	20	22	70	20	38	95	20	52	129	16	56
41	16	18	71	16	31	96	16	42	131	16	57
42	20	23	72	20	39	97	20	53	133	16	58
44	20	24	73	16	32	99	20	54	135	16	59
46	16	20	75	20	41	101	16	44	138	16	60
48	16	21	76	16	33	103	20	56	140	16	61
50	20	27	77	20	42	105	20	57	142	16	62
51	20	28	78	16	34	106	16	46	145	16	63
53	16	23	79	20	43	108	16	47	147	16	64
55	16	24	80	16	35	110	16	48	149	16	65

Digitized by Google

woven with various weaves when taken from the loom. This is due to the fact that the warp is under tension during weaving, but when taken from the loom, this tension is relieved and the cloth tends to contract. This contraction, of course, increases the number of picks per inch, the actual increase depending on the contraction of the particular cloth under consideration.

The cloth roll w is driven from the gear v_3 through two intermediate gears w_2, w_3 that impart motion to the gear w_1. The arrangement of the hand wheel w_4 and friction clamp w_5 is the same as with the ratchet ring take-up motion.

BRAKE MOTION

32. Most fancy looms are equipped with a **brake motion** so that when the filling stop-motion is operated the loom will be stopped immediately. But for some such motion, the momentum of the loom would cause it to run for 3 or 4 picks before stopping, thus making it necessary for the weaver to turn back the head-motion to find the shed in which the pick was broken, whereas with a properly constructed brake motion the loom will in most cases be stopped before the reed reaches the fell of the cloth and with the broken pick in the shed. The brake motion also relieves the strain when the loom *bangs off*, and greatly lessens the liability of broken crank-shafts or lay swords.

The brake motion attached to the fancy loom shown in Figs. 1 and 2 is shown in detail in Figs. 21 and 22. A brake wheel x is made in one piece with the crank-shaft driving gear, which is keyed to the crank-shaft of the loom. A steel friction band x_1 having a strip of leather riveted to its inner face is fastened to a stud x_2, passes over the face of the brake wheel, and is connected to a lever x_3 by means of a rod x_5 and an adjustable eyebolt x_4. Attached to the opposite end of the lever x_3 is an upright rod y having setscrewed to its upper end a locking piece y_1 that extends through a slot in the casting z_4 fastened to the frame of the loom. A spring y_4, the tension of which may be adjusted by a movable

Digitized by Google

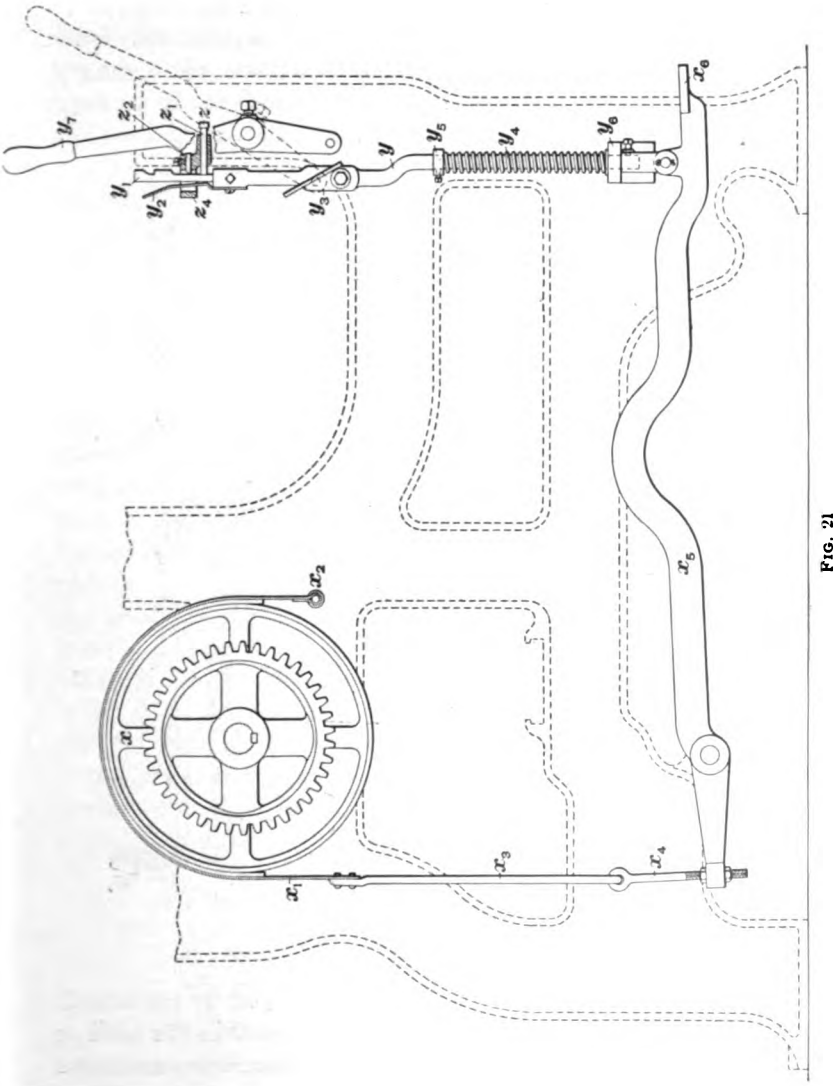

FIG. 21

Digitized by Google

collar y_4, rests against a casting y_3 fastened to the frame of the loom and tends to keep the lever x_3 in a raised position and the friction band x_1 pressed firmly around the brake wheel. When the treadle x_3 is pressed down, the spring y_4 is compressed and the brake released, the whole arrangement being held in position by means of the notched locking

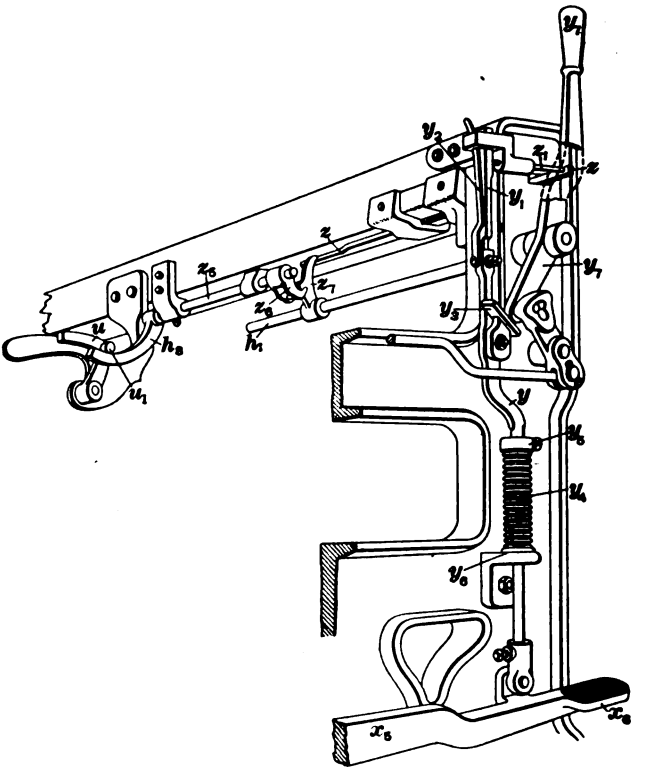

FIG. 22

piece y_1, which when drawn down is engaged by the adjustable steel projection z_5. A spring y_5 that strikes the back of the casting z_4 when the locking piece is lowered presses the latter forwards so that the jar of the loom will not allow it to become disengaged and the brake to be applied while the loom is running, but when the protector lever z is operated

Digitized by Google

by the protector motion or filling stop-motion, the plunger z_1 is forced forwards and disengages the locking piece y_1 from the projection z_2, allowing the spring y_4 to expand and lift the rod y with lever x_3, thereby tightening the friction band on the brake wheel and stopping the loom. By lowering the adjustable collar y_3, the compression of the spring y_4 will be increased when the brake motion is locked; consequently, when it is released greater friction will be applied to the brake wheel x and the loom stopped correspondingly quicker. As the brake is applied and the rod y rises, a casting y_5 bolted to it strikes the end of the shipper handle y_7, which is then in the position shown by the dotted lines, thus throwing off the power.

It will be noted that when this brake motion is used, the filling stop-motion is arranged somewhat differently, as shown in Fig. 22. In this case the lever h_2, instead of being attached to the shaft h_1, is fastened to a short independent shaft z_3 and also, because it is brought nearer to u, is made curved instead of straight. A dog z_4 is fastened to the other end of the shaft z_3 and engages a lever z_7 that is loose on the shaft h_1 and engages with its free end the protector lever z. The result of this arrangement is that when the filling stop-motion is operated, the dog z_4 will operate the lever z_7, which will in turn operate the protector lever z and put the brake on the loom. The same result will also occur if the protector motion is operated and its dagger strikes the protector lever z, but in either case the belt is not thrown off until the casting y_5 strikes the end of the shipper handle y_7.

SELVAGE MOTIONS

CAM SELVAGE MOTIONS

33. There are several different types of **selvage motions** applied to fancy looms, the one shown in detail in Fig. 23 being a **cam-motion.** On the end of the upright shaft h is fastened a bevel gear h_3 that drives another bevel gear h_{10} imparting motion to a cam k. This cam works

Digitized by Google

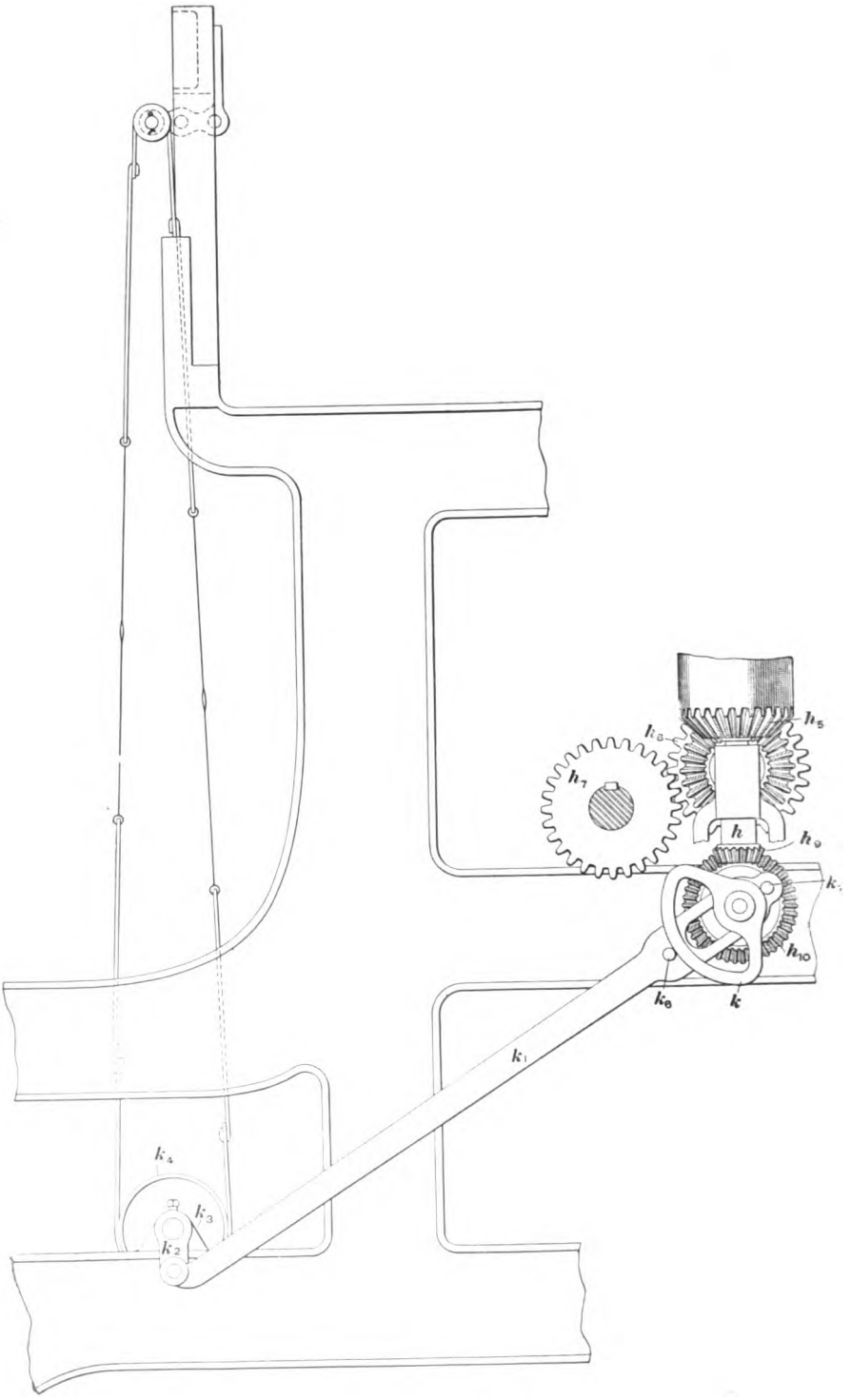

FIG. 23

Digitized by Google

between two pins k_6, k_7 in the rod k_1 and imparts to it a reciprocating motion that is transmitted by means of the arm k_8 to the shaft k_3; this shaft carries bosses k_4 for operating the selvage heddles, which are connected to them by means of straps in the ordinary manner. The cam is so shaped that the selvage ends are alternately raised and lowered on every pick, so that a plain selvage is woven on each edge of the cloth.

UNIVERSAL SELVAGE MOTION

34. Fig. 24 is an illustration of a selvage motion by means of which the selvage ends may be operated in any

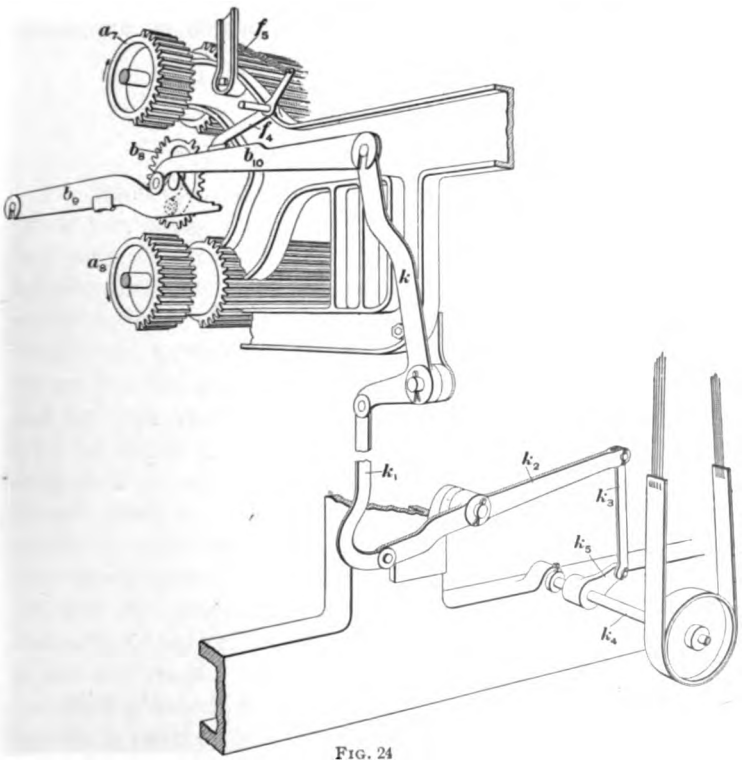

FIG. 24

desired manner, so that they may be made to change on every pick or may be made to remain stationary while two

Digitized by Google

or more picks are inserted in the selvage, thus weaving either plain or tape selvages on each edge of the cloth. In this motion the oscillating movement of the shaft k_4 is obtained by means of an extra, or fifth, vibrator gear b_8 placed between the box cylinder gears a_7 and a_8, and operated by an extra row of risers or sinkers on the box chain. This vibrator gear is provided with a vibrator lever b_9, by means of which the risers and sinkers on the chain govern its movement, and a connector b_{10}, which transmits its motion to the elbow lever k. This lever is connected by means of a rod k_1 to a lever k_2, which in turn is connected to an arm k_3 on the shaft k_4 by means of a rod k_2. The connector b_{10} is held in place by means of a follower lever f_4, which is constantly pressed on it by means of a spring f_5.

Digitized by Google

WOOLEN AND WORSTED FANCY LOOMS

(PART 2)

CROMPTON FANCY LOOM

INTRODUCTION

1. Although many arguments have been advanced and much has been said in favor of both open- and close-shed looms for weaving woolen and worsted fabrics, their relative value is undecided, for the reason that each loom has its disadvantages as well as its advantages. The typical close-shed loom, in which the warp yarn is all lowered to the level of the bottom shed after each pick, is rarely used in woolen and worsted weaving. Most of the looms employed in this class of work, if not of the open-shed type, operate on the split-shed principle, but the common practice is erroneously to call them close-shed looms. In regard to the relative merits of these two types, it may be safely stated that in the open-shed looms there is less strain on the warp yarn in opening the shed, since the harnesses are raised or lowered only when required by the weave, and no unnecessary movements are made. On the other hand, it is claimed that the so-called close-shed loom is easier on the warp yarn when the lay is beating up the filling, since when the reed delivers the blow to the fell of the cloth, all the warp yarn is level, or practically so, at the center of the shed and in a practically straight line from the whip roll to the breast beam. Thus

For notice of copyright, see page immediately following the title page

Digitized by Google

each warp thread sustains a portion of the blow and is in the best position to resist it. In the open-shed loom, the warp threads are deflected from a straight line by the harnesses, which keep the shed constantly open, so that they are not in a position to resist the blow of the lay as well as in the close-shed loom; moreover, in the open-shed loom, the blow must be resisted by a part of the warp, since some of the warp threads, being drawn through harnesses that are changing, are slack at this time and hence can support no part of the blow, whereas in the close-shed loom the entire warp is level at each pick, so that every warp thread helps to resist the blow of the lay.

Other things being equal, a close-shed loom is easier for the weaver than an open-shed loom, since, with this type of loom, the warp is brought level at each pick, thus enabling broken warp ends to be readily drawn in without resorting to any special leveling device for bringing the harnesses and warp level, as is necessary in looms of the open-shed class. With good strong warp yarns and well-made warps the close-shed loom will give the best of results, and is moreover a loom that is easily kept in repair; but it must be said that the tendency at the present time is to give the open-shed loom the preference. It has the advantage over the close-shed loom on fibrous and weak yarns, on account of the absence of all unnecessary chafing of the warp by the harnesses.

2. The Crompton heavy-pattern fancy woolen and worsted loom is shown in Figs. 1 and 2, the former being a front view and the latter a rear view. Although known as a close-shed loom, it actually forms a split shed, since the harnesses and warp yarn are brought level at the center of the shed after the insertion of each pick, whereas in the true close-shed, the warp is brought level with the line of the bottom shed. In addition to the difference in the principle of the shedding mechanism, this loom differs materially from other woolen and worsted looms in the principle and construction of its various other mechanisms; namely, the driving arrangement, the box motion, the filling stop-motion,

Digitized by Google

Digitized by Google

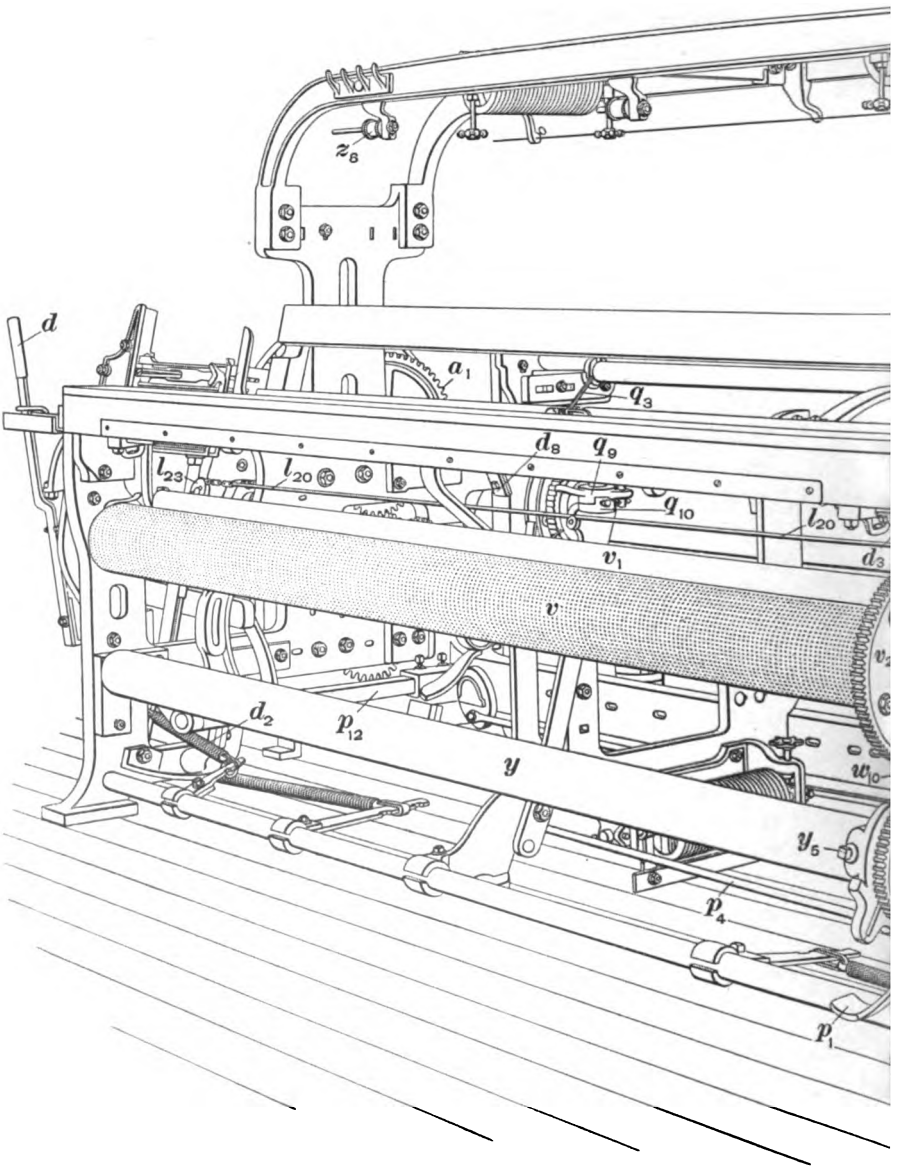

FIG

Digitized by Google

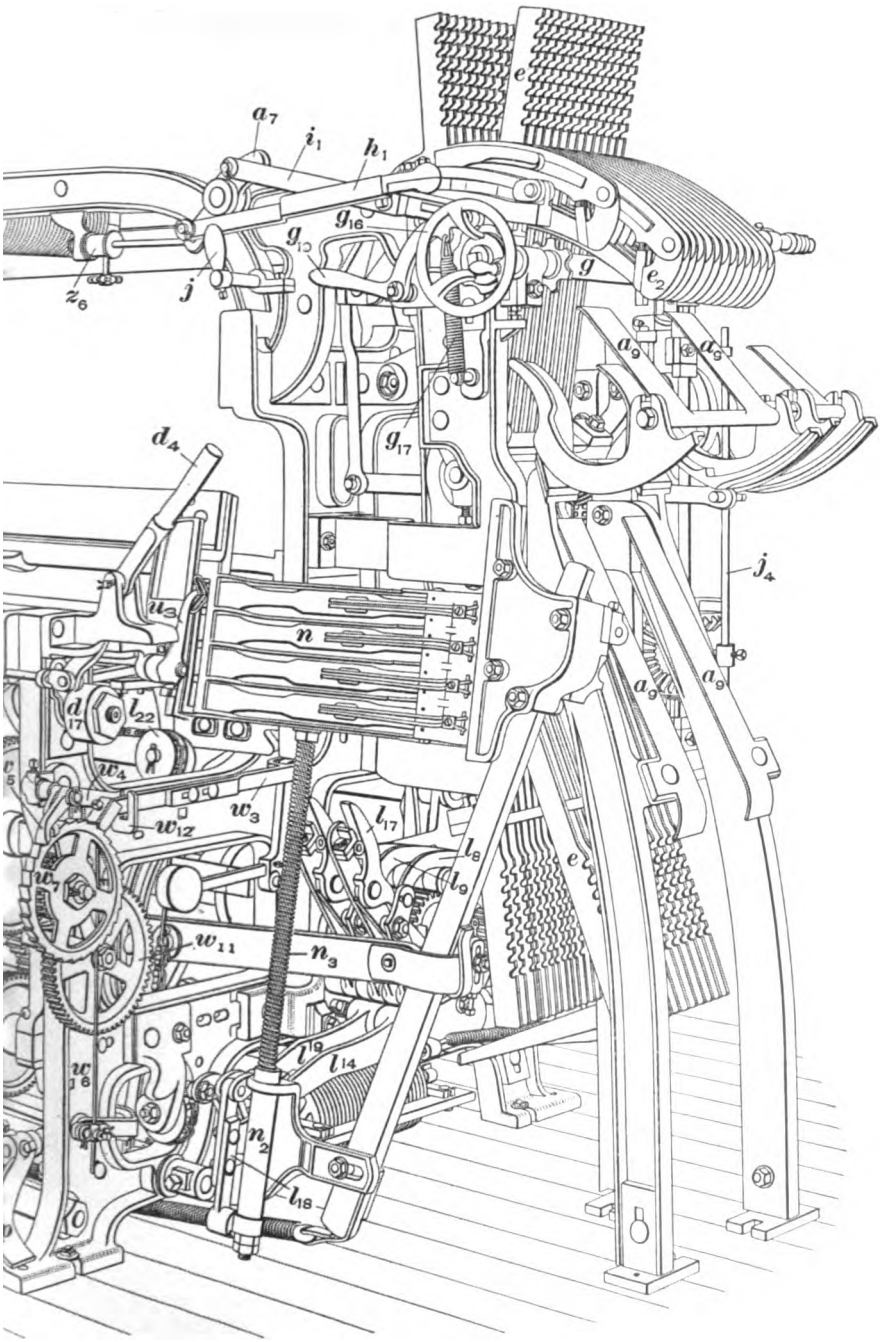

Digitized by Google

Digitized by Google

Digitized by Google

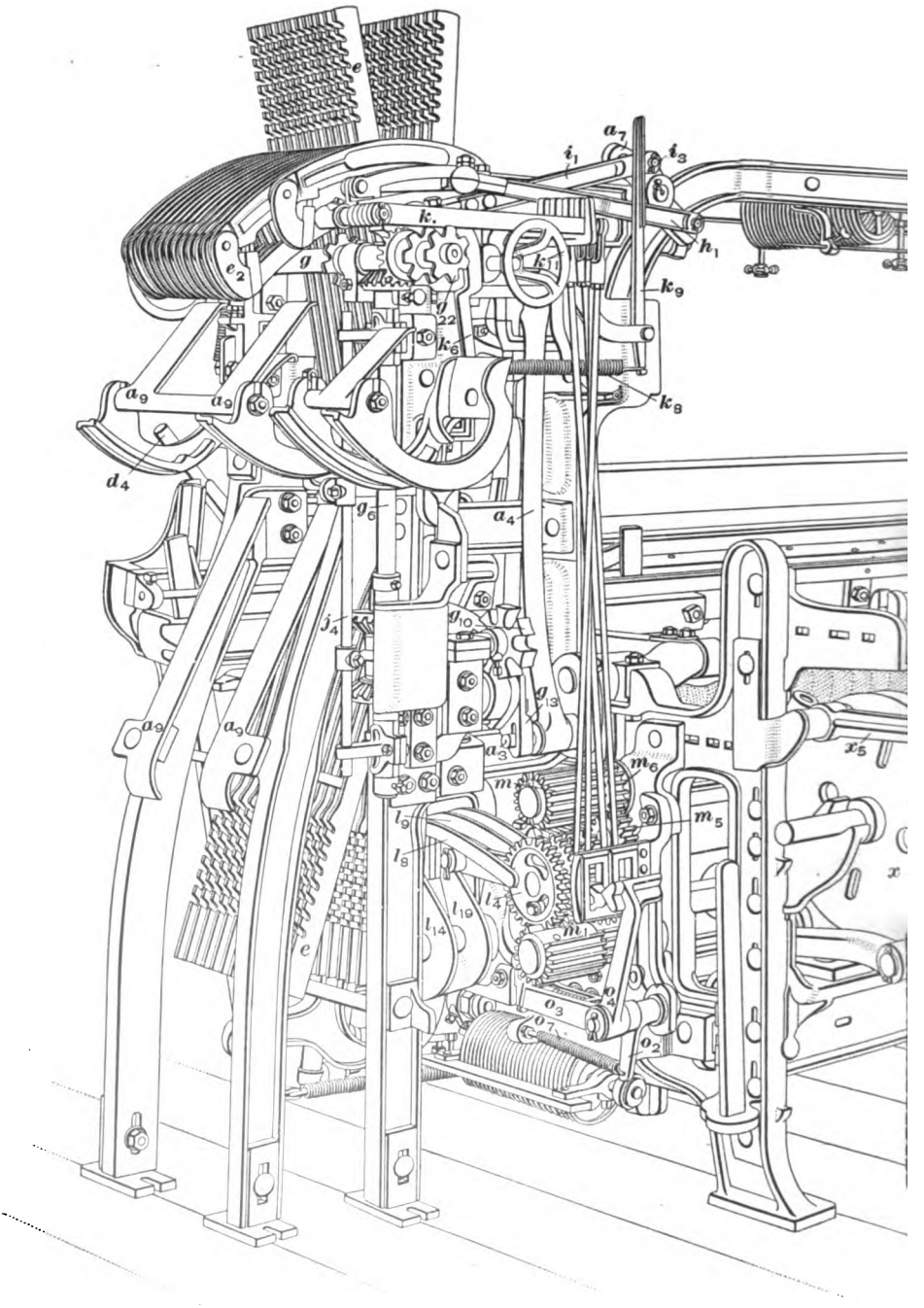

FIG. 2

Digitized by Google

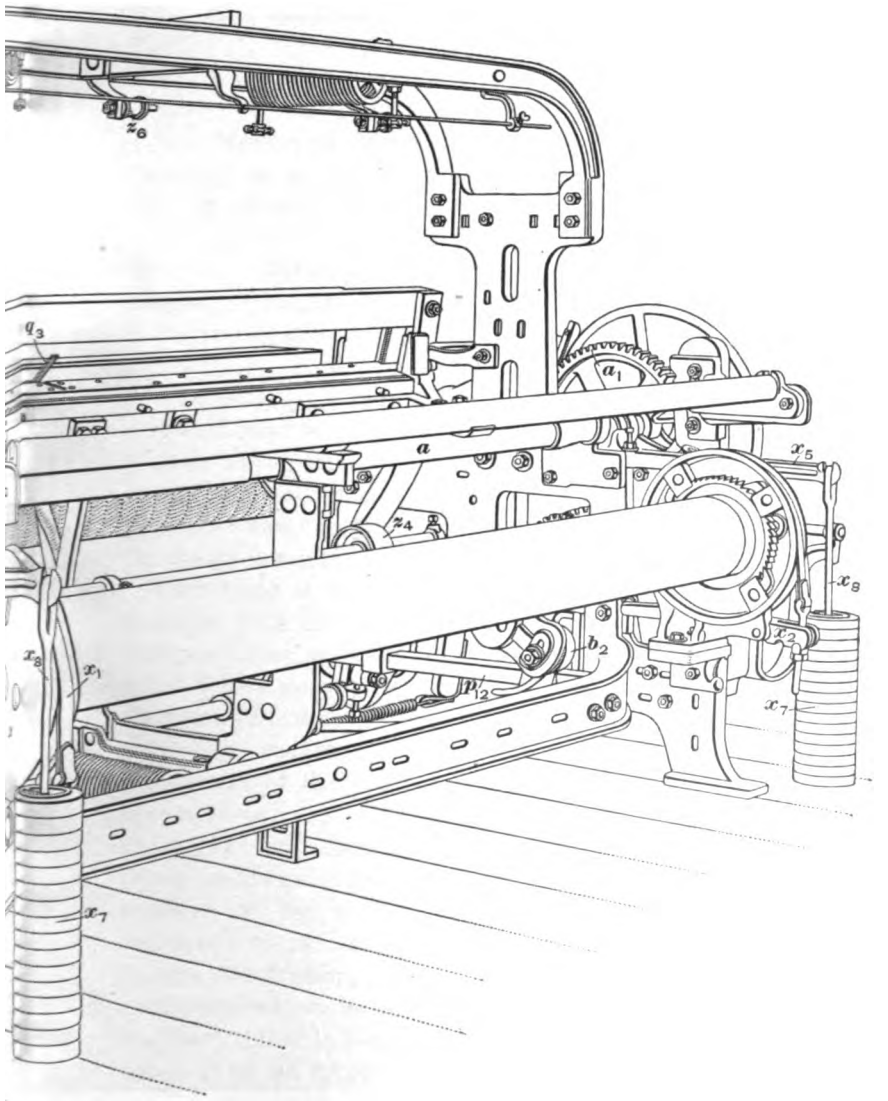

Digitized by Google

Digitized by Google

the protector motion, the take-up motion, and the selvage mechanism. The loom, as illustrated, is not equipped with a brake motion. Other than these differences, the Crompton loom is of the usual construction.

DRIVING

3. Motion is imparted to the loom by a driving belt running on a pulley c_1, Fig. 3 (*a*), fastened to the cross driving shaft *c*, which is supported in bearings attached to the frame of the loom and carries a leather-faced friction plate c_8. These parts are in motion continuously, but no motion is imparted to the loom unless the friction plate c_8 is moved into contact with a friction plate c_2 that is loose on the shaft *c*. Attached to the friction plate c_2 and also loose on the shaft is a 19-tooth bevel pinion gear c_3 that drives a 58-tooth gear b_1 fastened to the bottom shaft *b* of the loom. Motion is imparted to the crank-shaft *a* by a 58-tooth gear a_1 meshing with the gear b_1; the crank-shaft and bottom shaft therefore revolve at the same rate of speed; in other words, the loom is equally geared.

The loom is started by throwing the friction plate c_8 in contact with the plate c_2, which is accomplished by the shipper lever *d*. A collar c_9 with two projecting lugs that extend into slots in the lever c_9 is loosely supported on the shaft *c* and separated from the hub of the friction plate c_8 by a leather washer c_{12}. An adjustable rod c_9 attached to the upper end of the lever c_9 connects it with one arm c_{10} of an elbow lever, the other arm c_{11} of which is cast in the form of a yoke and engages the shipper lever. As the shipper lever is drawn toward the center of the loom, against the tension of the spring d_2, attached to arm d_1, motion is imparted to the lever c_9, and the collar c_9 that it operates forces the friction plate c_8 in contact with c_2, allowing the motive power to be communicated to the loom. The leather washer c_{13} that is placed between the stationary collar c_9 and the hub of the rotating friction plate c_8 prevents wear, which would otherwise be excessive, since the pressure of the

Digitized by Google

collar on the friction plate must be of considerable intensity in order to cause the latter to drive the plate c_3 and the loom. A similar leather washer c_4 is placed between the sleeve of the pinion c_3 and the bearing of the shaft c, to receive the thrust of the plate c_3 when c_3 is forced against it. In order to withdraw the friction plate c_3 from the plate c_{2}, so as to stop the loom instantly when the shipper lever d is released and moved from the center of the loom by the spring d_2, a yoke casting c_7 is bolted to the lever c_6 and carries two projecting lugs engaging a groove in the hub of the plate. This yoke should be so adjusted that the lugs will not bear against the sides of the slot when the plate c_6 is pressed in contact with the plate c_{2}, as this will quickly wear out the lugs; this whole pressure should be borne by the collar c_5.

The upper end of the shipper lever d extends through a slot d_4, Fig. 3 (b), and when drawn inwards toward the center of the loom is held in a recess, or notch d_6, Fig. 19. A shipper handle d_4, Fig. 3 (b), on the opposite side of the loom is connected with the lever d by a rod d_5 located just below the breast beam, so that the loom may be started or stopped by either d or d_4, one of which is always easily within reach of the weaver. One point to be noted in connection with this driving arrangement is that as the gear c_3 is loose on the shaft c, the lay may easily be pushed back by the weaver, as is frequently required when the loom is at rest and plates c_{2}, c_6 not in contact. The reason for this is that in so doing it is not necessary to turn back the shaft c, as in many similar driving mechanisms.

SHEDDING MECHANISM

4. The principle of the Crompton shedding mechanism is illustrated by the sectional view of the head-motion shown in Fig. 4. In this illustration, only one harness with its connections with the shedding mechanism is shown, but actually a number of harnesses are operated; in a standard loom, the equipment is 27 harnesses, any one of which may

Digitized by Google

Digitized by Google

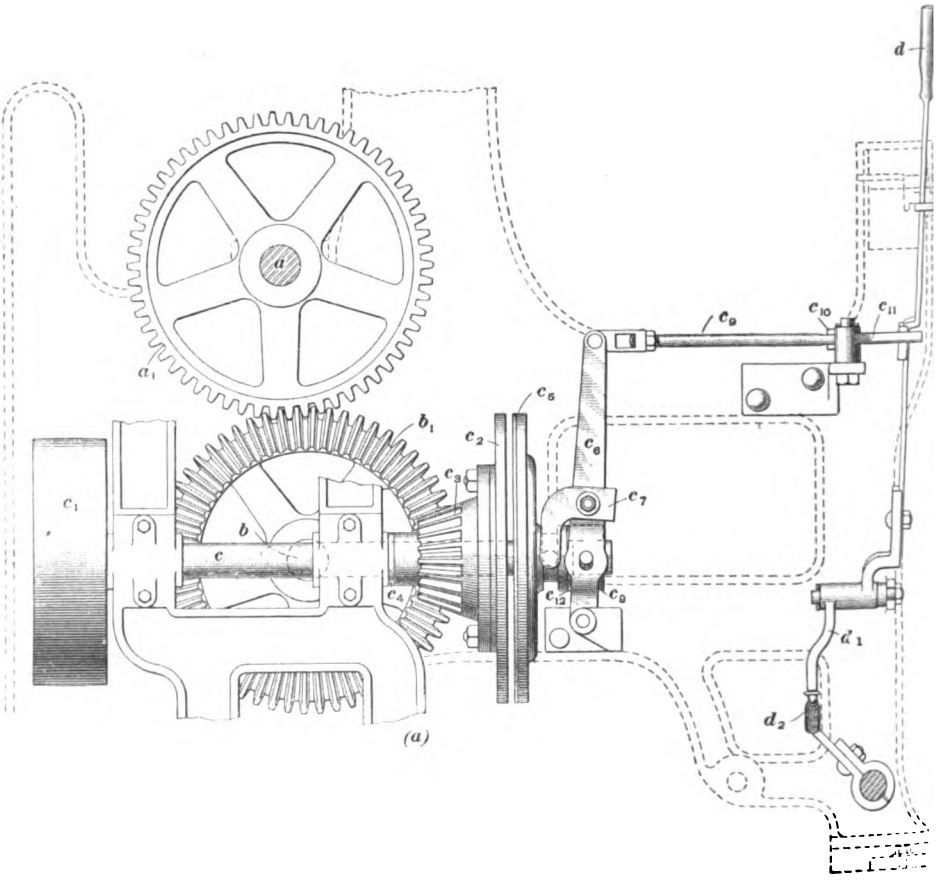

Digitized by Google

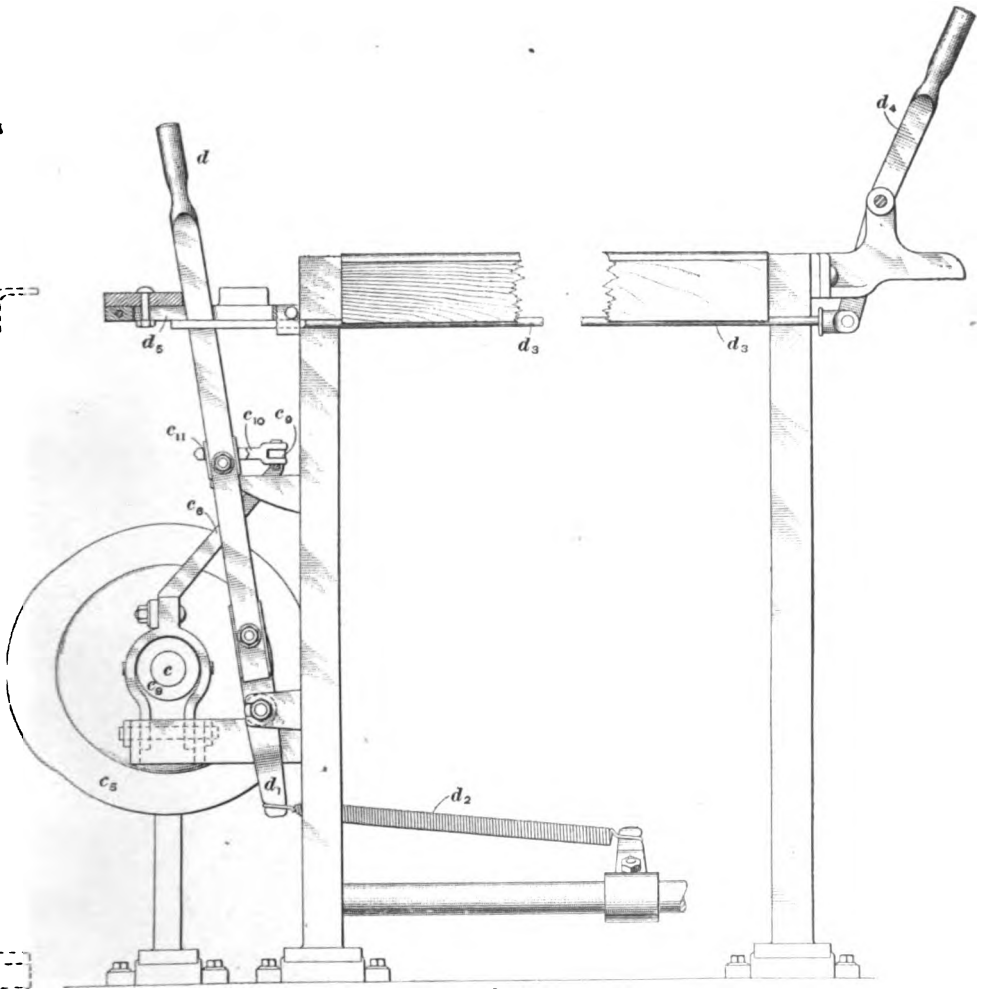

(b)

FIG. 3

Digitized by Google

Digitized by Google

Digitized by Google

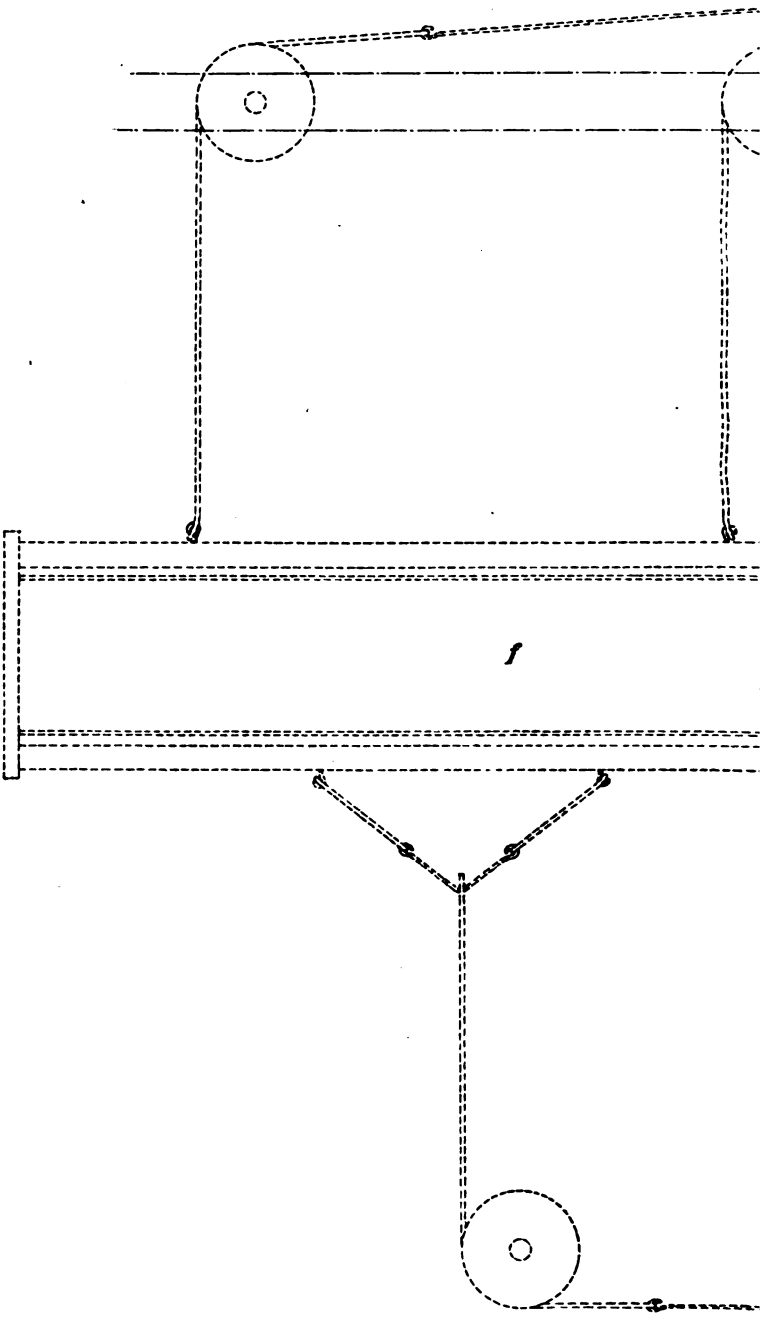

Digitized by Google

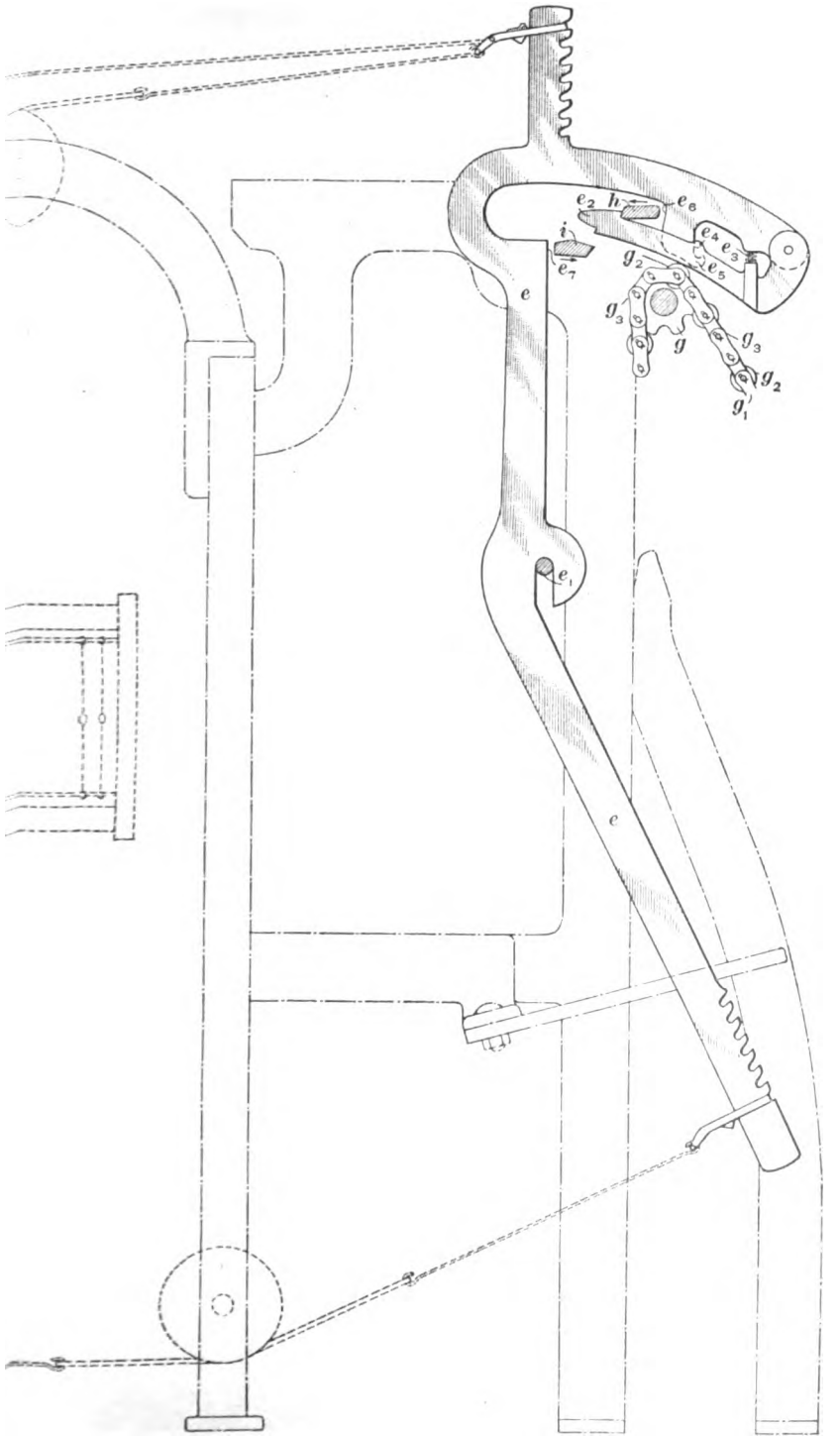

Digitized by Google

Digitized by Google

be raised or lowered entirely independent of the others. Each harness *f* is connected by straps, wires, and stirrups—the former running over suitable sheaves—to an angular harness lever, or jack, *e* supported on a rod e_1. A jack-hook e_2 pivoted to the jack rests on the harness chain g_1, which is composed of rollers and washers threaded on suitable spindles or chain bars held together by flat links and secured by cotter pins. The harness chain is supported by a chain cylinder *g* having an intermittent rotary motion, so that a new bar of the harness chain will be forced under the jack-hooks at each pick of the loom. A roller g_2 on the harness chain raises the jack-hook against the compression of a spring e_3, while a washer g_3 on the harness chain allows the jack-hook to fall. The object of the spring e_3 is to prevent vibration of the jack-hook and to insure its fall when a washer on the harness chain is brought into action.

The downward movement of the jack-hook is limited by a pin e_4 on the jack-hook that rests in a hooked part e_5 of the jack. To operate the jack so that it will raise and lower the harness, two sliding bars, or knives, *i*, *h* are employed; the former, since it raises the harness, is known as the **lifter**, and the latter, since it lowers the harness, is called the **depressor**. They slide in slots, shown in Figs. 6 and 10, in the framework of the machine and in opposite directions; that is, when the lifter *i*, Fig. 4, is moving from the loom, the depressor *h* is moving toward the loom, as shown by the arrows; and vice versa, when the lifter is moving toward the loom, the depressor is moving from it. When in the position shown in Fig. 4, both the lifter and depressor are just commencing to move in the direction of their respective arrows and all the harnesses are level in the center of the shed. In considering the action of this mechanism in raising and lowering the harnesses so as to produce the proper sheds for the insertion of the picks of filling, it is only necessary to deal with the method of operating 1 harness, since all the harnesses are operated in a similar manner.

With all the harnesses level in the center of the shed, the jacks all evenly in line, and the lifter and depressor in

Digitized by Google

Fig. 5

Digitized by Google

the positions shown in Fig. 4, a new bar of the harness chain is forced under the jack-hooks, and if it contains a roller the jack-hook is raised, but if a washer, the jack-hook remains down and is kept there by the spring e_3. The jack-hook contains two hooks, or more properly notches, one on the upper edge, designed to be engaged by the depressor h, and another on its lower edge that may engage with the lifter i. Suppose that a roller g_3 is forced under the jack-hook; then the latter will be raised, and as the depressor moves in the direction shown by the arrow in Fig. 4, it will engage the notch in the jack-hook, moving the top of the jack in toward the loom and the bottom part from the loom, as shown by the full lines in Fig. 5, thus lowering the harness. On the other hand, suppose that when a new bar of the harness chain is brought into action a washer is under the jack-hook; then it will remain in its lower position, and the lifter engaging the notch in its lower edge and moving in the direction shown by its arrow in Fig. 4, will move the top of the jack from the loom, and the bottom of the jack toward the loom, as shown by the dotted lines in Fig. 5, thus raising the harness. Certain harnesses being lowered and others raised by this operation will result in a shed being formed with the warp yarn, through which the shuttle is passed with the pick of filling. It should be particularly noted that a roller on the harness chain depresses the harness and a washer raises it; hence, in constructing harness chains for this loom, washers are threaded on the chain bars for risers in the chain draft and rollers for sinkers.

After the depressor h has moved in the direction shown by its arrow in Fig. 4 for a distance sufficient to lower the harness to the bottom shed, its motion is reversed. As this takes place, the front edge of the depressor frees the jack-hook, so that it will be ready to fall in case a sinker is brought under it when the next bar of the harness chain is brought around; but as the depressor continues to move, its back edge strikes the jack at the point e_4 and brings the jack back to its central position and the harness to the center of the shed. In the same way the motion of the lifter i

Digitized by Google

is reversed, so that if a roller is to be forced under the jack-hook on the next pick it will be free to rise and engage the depressor. The continued motion of the lifter results in its back edge coming into contact with the jack at the point e, and lowering it to its central position and the harness to the center of the shed. The jacks, harnesses, lifter, and depressor having now resumed their initial positions, a new bar of the harness chain is forced under the jack-hooks and the harnesses raised and lowered to produce the next shed for the insertion of another pick of filling.

Although this shedding mechanism is commonly and erroneously said to produce a close shed, it in reality makes a true split shed. The warp yarn is all level at the center of the shed after the insertion of each pick; then certain harnesses are raised and others lowered to form the shed, after which all the harnesses are brought level in the center again for a new selection of harnesses to be raised or lowered for the next shed.

5. Driving.—Motion is imparted to both the lifter and depressor and to the chain cylinder by suitable connections with the crank-shaft of the loom. The lifter and depressor have a sliding, or reciprocating, movement and are driven as shown in Fig. 6, which is a view of the Crompton shedding mechanism showing the driving parts only, the jacks and attached parts being removed. A casting a_3 setscrewed to the crank-shaft a of the loom acts as a crank, and by means of a crankpin a_3 imparts motion to an upright connecting-rod a_4 that is adjustably connected to a casting a_5 secured to a square shaft a_6. As the crank-shaft rotates, therefore, the connecting arm will rise and fall and impart a partial rotary reciprocating, or rocking, movement to the shaft a_6. Keyed to each end of this shaft is a casting a_7 with two extended arms to which connecting-rods i_1, h_1 are attached; the former is connected to one end of the lifter i, and the latter to one end of the depressor h with ball and socket joints i_2, h_2. The opposite ends of the lifter and depressor are connected to the square shaft a_6 by similar arrangements; hence, as this

Digitized by Google

Digitized by Google

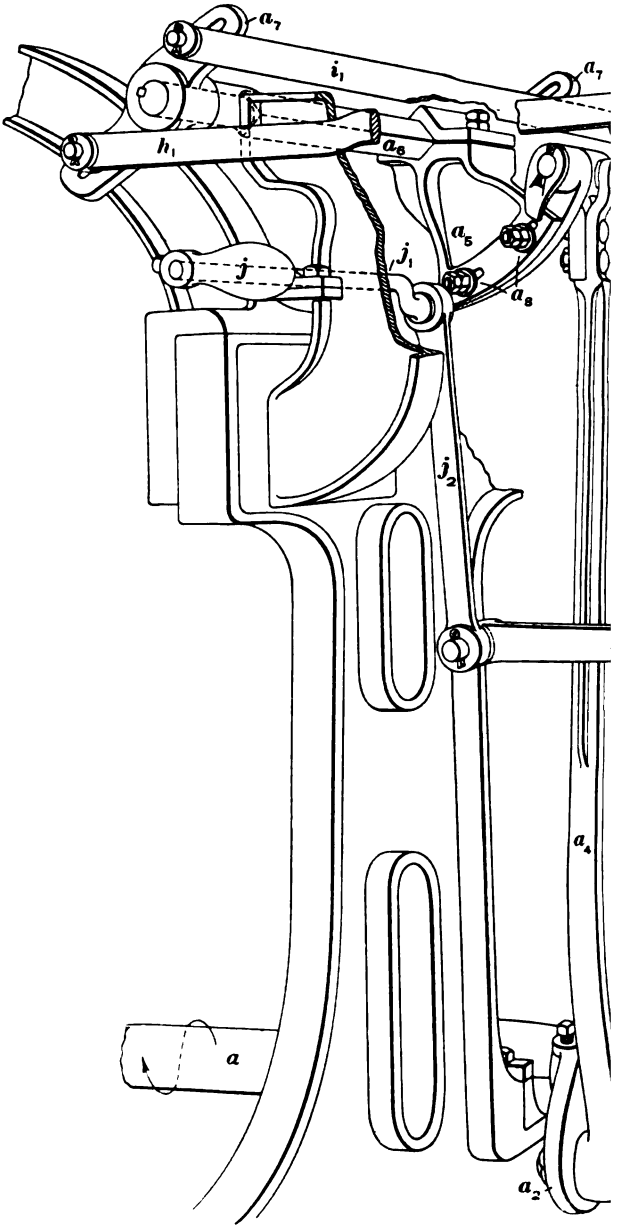

Digitized by Google

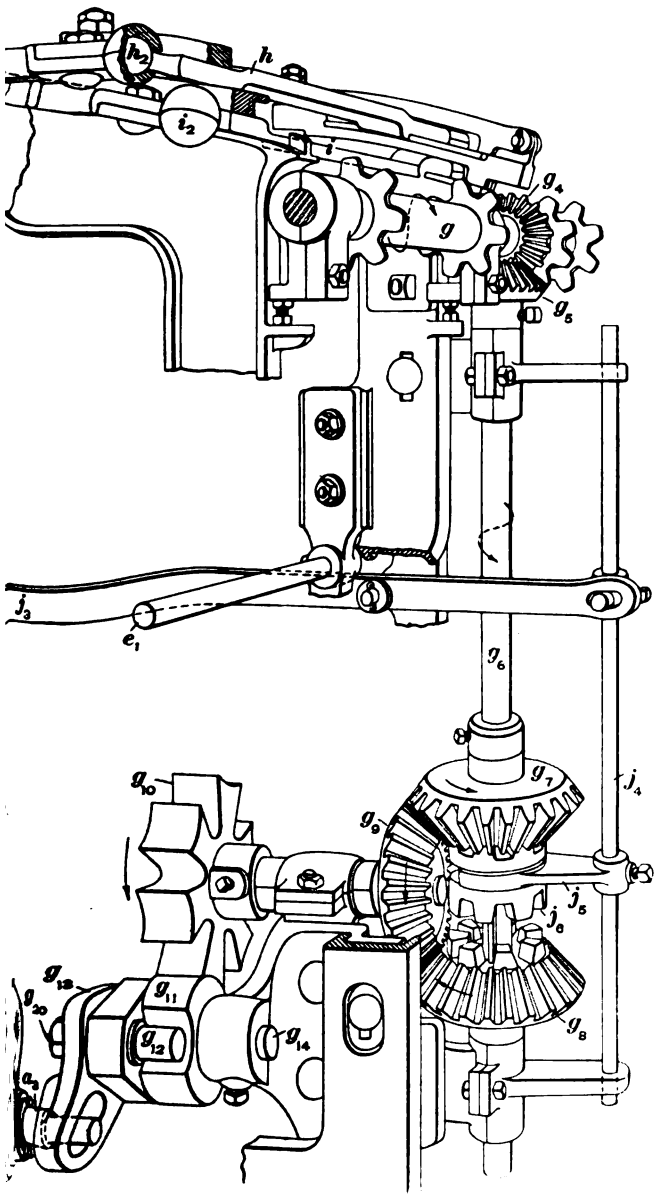

1. 6

§ 53 15430

Digitized by Google

Digitized by Google

shaft rocks in its bearings, the requisite reciprocating sliding motion in opposite directions is imparted to them.

The chain cylinder g is also driven from the crank-shaft, but with an intermittent motion, so that a bar of the harness chain will be quickly brought into position beneath the jack-hooks and then come to a pause, in order to allow the lifter and depressor to engage the jack-hooks and raise or lower the harnesses. This characteristic movement of the chain cylinder is obtained as follows: An extension of the crankpin a_4 engages with a slotted casting g_{13} loose upon a stud g_{14}. A pin gear g_{11}, g_{12} adjustably bolted to the casting g_{13} and also loose on the stud g_{14} engages with a 7-tooth star gear g_{10} (see also Fig. 7) fastened to a short shaft, to which is also attached a bevel gear g_9 that meshes with another bevel gear g_7. This gear is loose on an upright shaft g_6, but imparts motion to the shaft through a sliding clutch collar j_6 keyed to it. The clutch collar j_6, although it transmits the motion of the gear g_9 to the shaft g_6, is capable of being slid along the shaft so as to impart motion to g_6 through either gear g_7 or g_8, as may be desired. On the upper end of the upright shaft is a bevel gear g_5 meshing with a bevel gear g_4 that is fastened to the shaft of the chain cylinder g. As the crankpin a_4 rotates, the pin g_{12} engages one of the cut-outs in the star gear g_{10} and turns it the distance of 1 tooth, or one-seventh of a revolution; this motion communicated to the chain cylinder g turns the latter one-seventh of a revolution, since all the bevel gears used contain the same number of teeth. As the chain cylinder contains seven recesses for the reception of bars of the harness chain, this will result in a new bar of the chain being forced under the jack-hook at each revolution of the

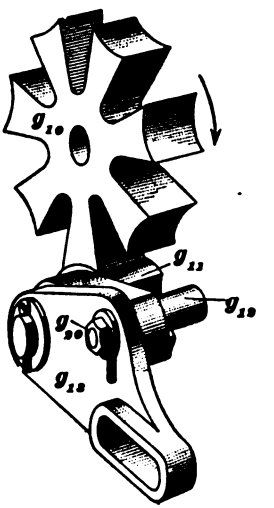

FIG. 7

Digitized by Google

pin gear g_{18}, or in other words, at each revolution of the crank-shaft a, or pick of the loom.

In order to hold the chain cylinder in its proper position while it is stationary, the end of each tooth of the star gear g_{10} is recessed so as to fit the curved concentric portion g_{11} of the pin gear; thus while this portion of the pin gear is in contact with the star gear it will impart no motion to it, but instead will hold it steady and prevent its turning.

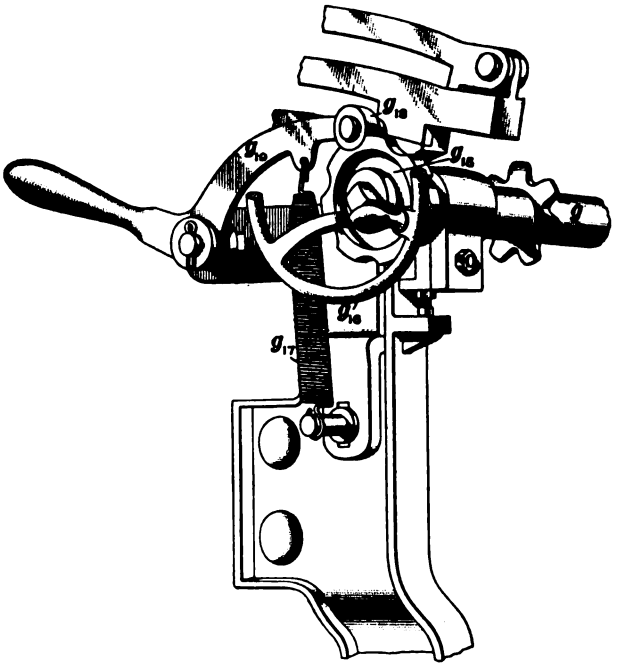

FIG. 8

To further steady the chain cylinder and hold it, while stationary, in its proper position, so that the bar of the harness chain will be presented to the jack-hooks in the correct position, a check-roll g_{15}, Fig. 8, is employed. This roll is carried by a lever g_{16}, to which is attached a spring g_{17}, that keeps the roll firmly pressed against a disk g_{18} fastened to the shaft of the chain cylinder g. The roll, by engaging with cut-outs in this disk, holds the harness chain in the

Digitized by Google

proper position. A hand wheel g_{14} is also attached to the shaft of the chain cylinder for use when it is desired to turn the harness chain by hand. In order to support long and heavy harness chains so as to prevent their swinging and becoming caught in the mechanism of the loom, suitable guides a_{9}, Fig. 1, are bolted to the frame of the loom.

6. Reverse Motion.—During the ordinary running of the loom, motion is imparted to the upright shaft g_{6} in the direction of the arrow, by means of the gear g_{7} transmitting the power through the clutch collar j_{6}, which is engaged with the gear, as shown in Fig. 6. In this case, the chain cylinder g is driven in the direction shown by the arrow, and the harness chain runs under it, instead of over it as in the majority of looms. When, however, a mispick is made, or when for any cause a pick-out becomes necessary, the direction of rotation of the chain cylinder is reversed, so that the sheds will be

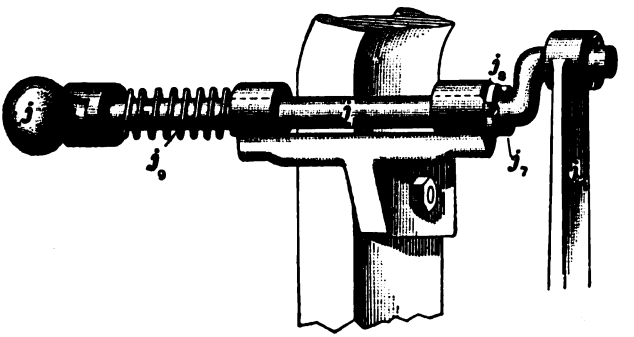

FIG. 9

opened in reverse order until the mispick is found or the pick-out completed. On the majority of looms this operation necessitates that the shedding mechanism be disconnected and turned over by the weaver, but on this loom it is accomplished by power, the loom running in the ordinary direction and the chain cylinder in the reverse direction.

This is accomplished as follows: A reverse handle j, Figs. 6 and 9, is setscrewed to the end of a short cross-shaft j_{1}, the other end of which is bent in the form of a crank and supports a rod j_{2} connected to a lever j_{3} operating

Digitized by Google

a sliding upright rod j_5. A yoke, or fork, j_6 setscrewed to the rod j_5 engages a slot in the clutch collar j_4, so that if the rod j_5 is raised, the clutch will engage with the gear g_7, but if lowered, the clutch will engage with the gear g_8, which will then drive the upright shaft g_9 and chain cylinder g in the opposite direction to that of the arrows on them, thus reversing the motion of the harness chain and opening the sheds in reverse order. If the handle j is in the position shown in Fig. 6, with the crank part of the shaft turned vertically downwards, the harness chain runs in the ordinary direction; but if thrown into the position shown in Fig. 9, with the crank turned vertically upwards, the harness chain moves in the reverse direction.

In order to prevent vibration of the loom from jarring the clutch collar j_4 out of contact with either gear g_7 or gear g_8, a series of notches j_7 are made in a raised part of the shaft j_3; these engage with a projection j_8 on the frame, being pressed in contact with the latter by a coil spring j_9. This arrangement does not prevent the handle j from readily being operated, but simply acts as a stop to hold the mechanism in whatever position is desired. This reverse motion is an excellent arrangement and allows the weaver to reverse the sheds rapidly and with little exertion, it being simply necessary to turn the reverse handle and then operate the loom pick by pick with the power. When doing this the picking motion is disconnected, as will be explained later.

7. Setting and Timing the Shedding Motion.—The size of the shed is regulated by the amount of throw, or movement, given to the lifter and depressor, which may be adjusted by moving the connecting-rods i_1, h_1, Fig. 6, in the slots of the casting a_7. By moving them farther from the center of the square shaft a_6, more throw is given the lifter and depressor, which results in the harnesses being raised higher and depressed lower, and the size of the shed therefore increased; moving them in the opposite direction decreases the size of the shed. In adjusting the rods i_1, h_1, both at the front and back of the loom, care should be taken to

Digitized by Google

fasten them to a_7 equidistant from the center of the shaft a_8, so that the lifter and depressor will each have the same amount of movement and the harness be raised and lowered the same distance from the center of the shed. When the casting a_1 is in such a position that the pin a_3 is vertically over the center of the crank-shaft a, the connecting-rod a_4 is raised to its highest position and the harnesses should be level in the center of the shed, with all the jacks even. If the harnesses and jacks are not in this position, they should be adjusted; this may be done by loosening the nuts a_9, so that the casting a_8 may be moved until the jacks and harnesses are in the correct position, after which the nuts a_9 are tightened.

In order to time the shedding motion, the lay is brought forwards until the reed is about 1 inch from the fell of the cloth. The casting a_2, Fig. 6, is then loosened and turned until it is vertically up, or until the jacks are all even, whereupon the casting is again tightened. This closes the shed, bringing the harnesses level when the lay is in the position in which it was placed at the start. If it is desired to have the loom shed later or earlier, the crank-shaft may be placed so that the reed is less than 1 inch from the fell of the cloth in the first case, or more than 1 inch distant in the second case.

In timing the harness-chain cylinder, it will be noted that the movement of the cylinder, which forces a new bar of the harness chain under the jack-hooks, must take place during the time that the lifter and depressor are returning the harnesses to the center of the shed, since the jack-hooks are then disengaged from the lifter and depressor and are therefore free to rise or fall, according to the selection of the new bar of the harness chain. To accomplish this, the pin gear g_{13} is set ahead of the crankpin a_2, Fig. 6, the amount of the advance being adjusted by loosening the nut g_{20}, Fig. 7, and moving the pin gear forwards to the desired position. When the pin a_2, Fig. 6, is vertically above the center of the crank-shaft, the pin gear g_{13} should have completed the movement of the star gear g_{10} and be well disengaged from it, so that the concentric part g_{11} of the pin gear will be engaged with the hollow ends of the teeth of the star gear.

Digitized by Google

BOX MOTION

8. As in most fancy woolen and worsted looms, the Crompton box motion is arranged to operate four boxes on each end of the lay, any one of which may be raised so as to be level with the race plate when required. The raising and lowering of the boxes is controlled by a box chain g_{21}, Fig. 10, that is similar to the pattern, or harness, chain, except that it is only wide enough to contain four rollers, or washers, for operating four fingers k, k_1, k_2, k_3. Two of these fingers k, k_1

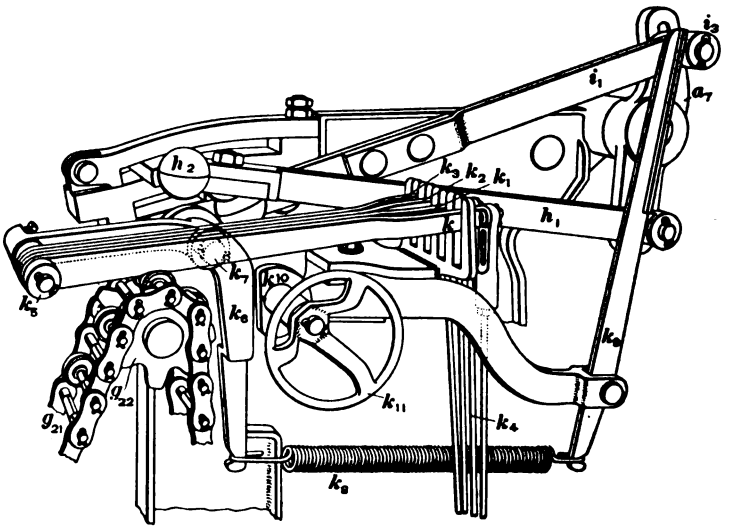

FIG. 10

control the operation of the boxes on the right of the loom, while the other two k_2, k_3 control the boxes on the left of the loom. The box-chain cylinder g_{21} is fastened to the same shaft as the harness-chain cylinder g, Fig. 6; consequently, the box chain must move in unison with the harness chain, and as it is therefore impossible for the box chain to get out of time with the harness chain, the correct box must always be brought level with the race plate, and the correct color of filling placed in each shed. The fingers k, k_1, k_2, k_3, Fig. 10,

Digitized by Google

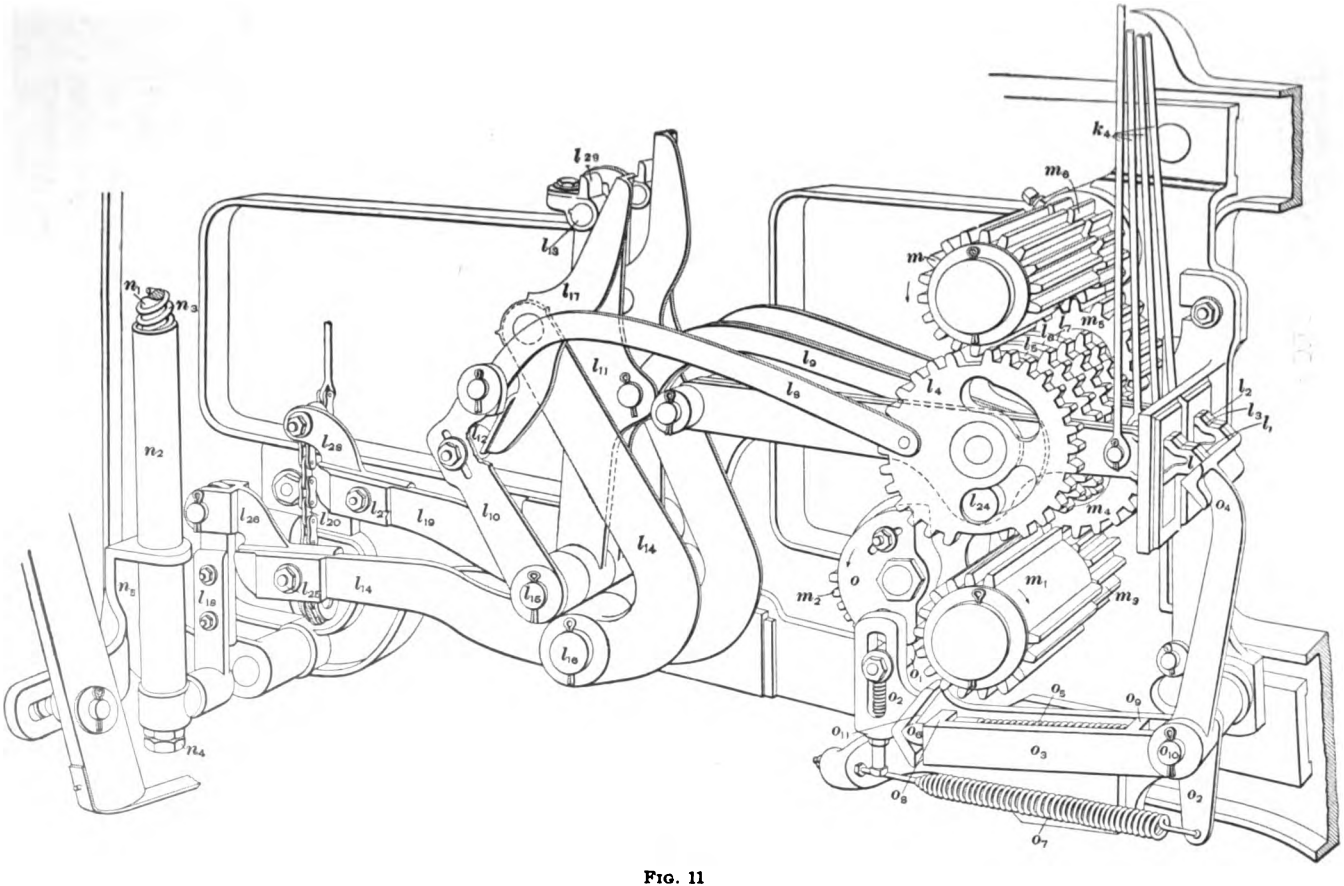

FIG. 11

Digitized by Google

are connected, by means of four adjustable rods k_4, with four vibrator levers l, l_1, l_2, l_3, Fig. 11; k is connected with the vibrator lever l; k_1, with the vibrator lever l_1; k_2, with l_2; and k_3, with l_3. By means of these connections, if a roller is placed on the box chain so as to come under any particular finger, the vibrator lever connected to that finger will be raised, while if a washer on the box chain comes under the finger, the vibrator lever will be lowered.

Each of the vibrator levers l, l_1, l_2, l_3 carries a vibrator gear l_4, l_5, l_6, l_7, respectively. Thus, if any vibrator lever is raised, the vibrator gear attached to it will be brought in contact with a cylinder gear m, while if the lever is lowered, the vibrator gear will come in contact with the cylinder gear m_1; these are sometimes known as *quill gears*, because the teeth are placed on a cylindrical sleeve, or quill. Each of the vibrator gears has 26 teeth, divided into two sections separated by spaces equal to those occupied by 1 tooth and 4 teeth, respectively. Each cylinder gear has 15 teeth separated by a small blank space.

Since motion is imparted to the cylinder gears, it will also be imparted to the vibrator gears when they are raised or lowered so as to be in contact with them. A steadying pin l_{14} attached to each vibrator lever works in a slot in the vibrator gear attached to that lever and governs the extent of the movement of the gear when operated on by either cylinder gear. Vibrator gears l_4, l_5 operate the boxes on the right-hand side of the loom, and since vibrator gears l_6, l_7, which operate the boxes on the left-hand side of the loom, are arranged in a similar manner and operate in the same way, the former only will be dealt with in the following description.

Attached to the vibrator gear l_4 is a connecting-rod l_8, and to the vibrator gear l_5 a similar rod l_9. Connecting-rod l_8 is also attached to a lever l_{10}, and connecting-rod l_9 to a lever l_{11}, both of which are fulcrumed on a stud l_{15}. An elbow lever l_{12} fulcrumed on the stud l_{12} carries a double-ended lever l_{13} at its upper extremity, while its other end is connected to the boxes on the right-hand side of the loom by means of the

Digitized by Google

castings l_{25}, l_{16}, sleeve n_3, spring n_2, and box rod n_1, the boxes being carried on the upper end of the latter. The weight of the boxes operating through the lever l_{14} keeps the lever l_{17} constantly in contact with a stud l_{13} on the lever l_{11} and a roller l_{12} fastened to the lever l_{10}.

9. The manner in which this arrangement raises and lowers the boxes is as follows: If a roller is placed on the box chain so as to raise the finger k, Fig. 10, the vibrator lever l, Fig. 11, will also be raised; this will raise the vibrator gear l_4, so that it will engage with the cylinder gear m. The cylinder gear will then turn the vibrator gear one-half of a revolution, or until the blank space equal to 4 teeth comes on top; this will result in throwing the connection of the rod l_8 to the other side of the vibrator gear, which will draw in the rod and pull the lever l_{10} to the right. As this takes place, the roller l_{12} will force the lower end of the double-ended lever l_{17}, the other end of which is resting on l_{13}, also toward the vibrator gear, which will result in the upper end of the lever l_{14} being operated in the same direction and its other end raised. Since this end of the lever is connected to the box rod and boxes, the latter will also be raised.

In a similar manner, if the roller is placed under the finger k_1, Fig. 10, the vibrator lever l_1, Fig. 11, will be lifted and the vibrator gear l_6 raised in contact with the cylinder gear m. Motion being imparted to this vibrator gear, it draws the connecting-rod l_9 and lever l_{11} to the right, the stud l_{13} on the latter operating the upper end of the double lever l_{17}, which since its opposite end is resting against the roller l_{15}, will operate the lever l_{14} and also raise the boxes. This connection, however, gives the boxes a lift equal to the distance of two boxes, while the former connection gave a lift of but one box; that is, the vibrator gear l_4 and its connections will raise the boxes from the first to the second box, while the vibrator gear l_6 and its connections will raise the boxes from the first to the third box. Both vibrator gears, if operated, will raise the boxes from the first to the fourth box. Reversing the operations described, that is, lowering

Digitized by Google

the vibrator gears so that they will engage the cylinder gear m_1, reverses the operation of the levers and lowers the boxes. From this it will be seen that any box can be brought level with the race plate by placing the proper roller or riser on the box chain so that the shuttle that it contains will be driven across the loom.

Vibrator gears l_6, l_7 are connected to the boxes that they govern in the same way as the vibrator gears l_4, l_5, but the

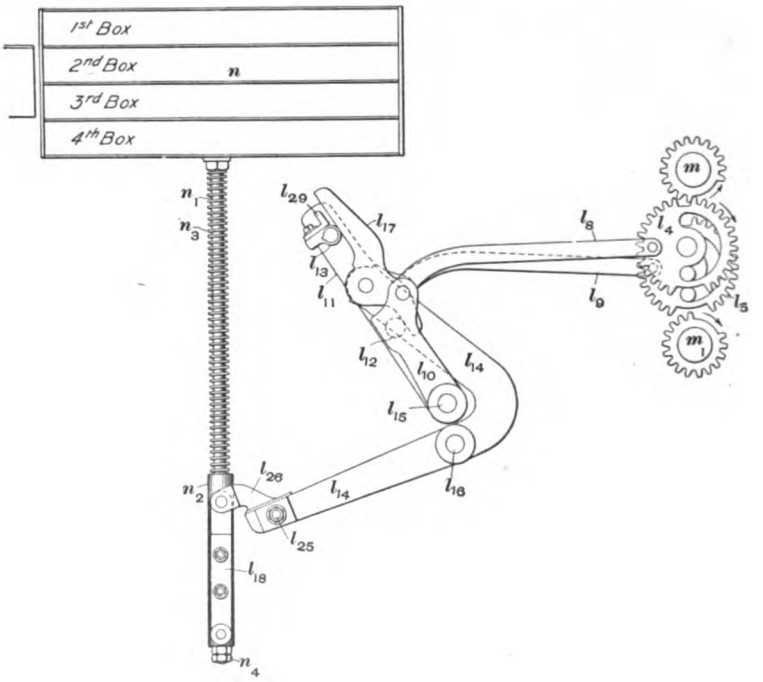

FIG. 12

casting l_{16} on the end of lever l_{15} instead of being connected directly to the lifting rod is connected to a chain l_{16} that, as will be explained later, is connected to the boxes on the opposite, or left-hand, end of the lay.

10. In order to make the system of levers operating the boxes more clear, Figs. 12, 13, 14, and 15 are given. These are diagrammatic views showing the positions of the boxes

Digitized by Google

when the box levers are in their four possible positions. Fig. 12 shows the first box level with the race plate. In this case, the levers l_{10}, l_{11}, l_{14}, l_{17} are in the position shown, both connecting-rods l_8, l_9 being extended to the left by the vibrator gears l_4, l_5. In this figure, the vibrator gear l_4 is shown raised and just commencing to be turned by the cylinder gear m to raise the second box so that it will be level with the race plate.

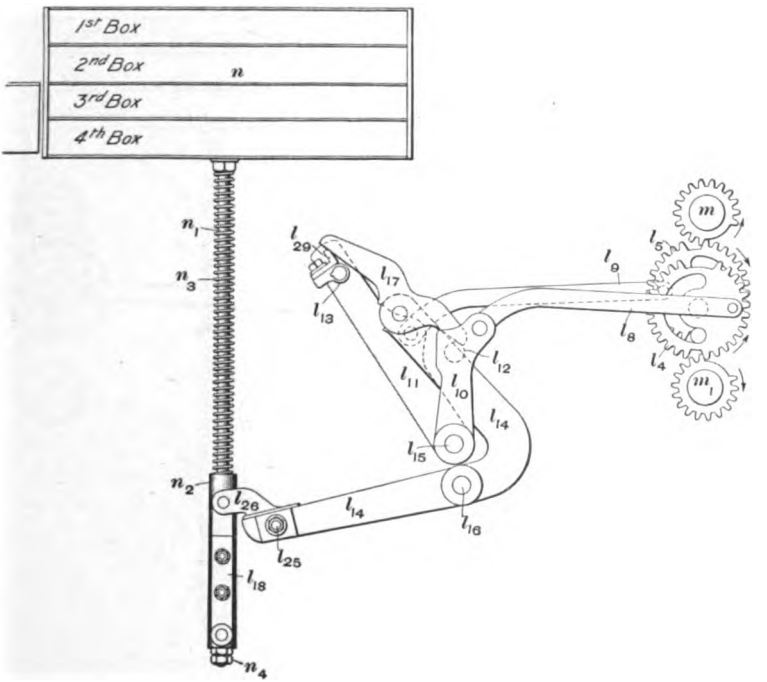

FIG. 13

Fig. 13 shows the second box raised level with the race plate, the lever l_{11} having remained stationary, but the lever l_{10} having been drawn in and having imparted a sufficient motion to the levers l_{17}, l_{14} to raise the boxes the distance of one box. In this figure, the vibrator gears l_4, l_5 are shown in the position they will assume just before the third box is to be brought level with the race plate. In this case, the vibrator

Digitized by Google

gear l_8 is raised so as to engage with the cylinder gear m and operate the lever l_{11}, while the vibrator gear l_4 is shown lowered so as to engage with the cylinder gear m_1, in order to return the lever l_{10} to its original position.

Fig. 14 shows the boxes raised so that the third box is level with the race plate, lever l_{10} having been returned to its original position and lever l_{11} having been operated so as to

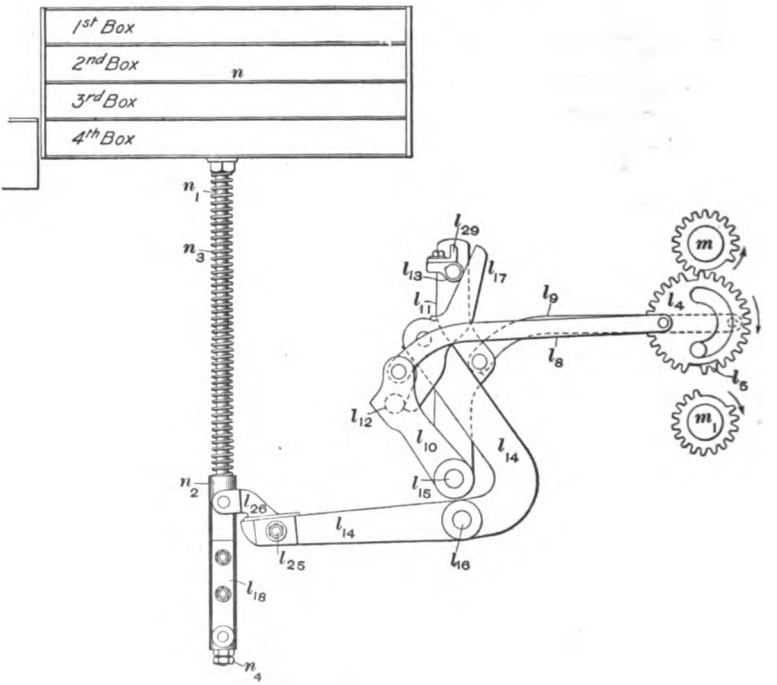

FIG. 14

give the boxes their requisite lift of the distance of two boxes. In this figure, the vibrator gears l_4, l_8 are shown in the position they will assume just before the fourth box is brought level with the race plate; that is, both vibrator gears must be operated on by the top cylinder gear m. In this case, the vibrator gear l_8 has already been operated on and vibrator gear l_4 is just about to be operated on by the top cylinder gear.

Digitized by Google

Fig. 15 shows the position of the boxes with the fourth box level with the race plate. In this case both the levers l_{10}, l_{11} are operated, raising the lever l_{14} to its greatest extent and bringing the fourth box level with the race plate. The vibrator gears l_4, l_5 are shown in the position that they will assume just before the boxes are returned with the first box level with the race plate. In this case both vibrator

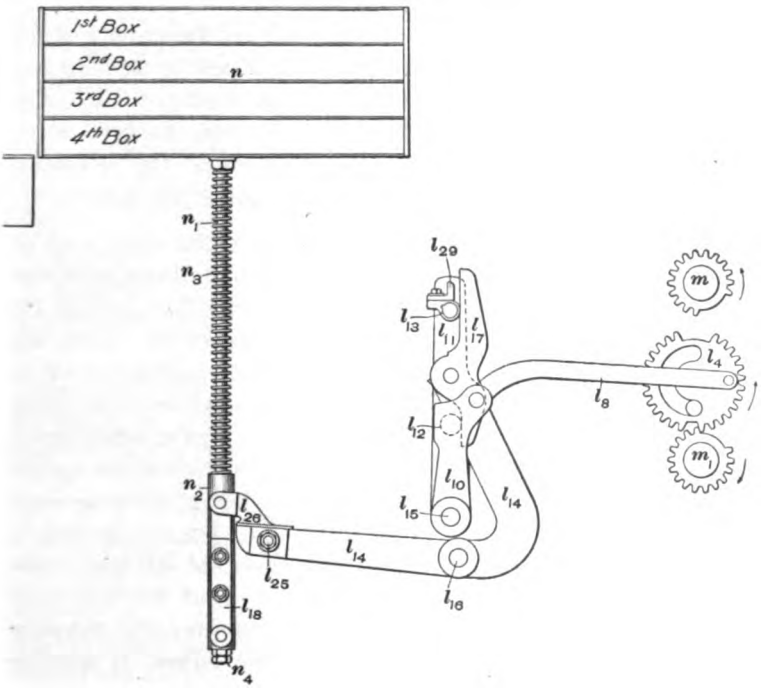

FIG. 15

gears will have to be brought in contact with the cylinder gear m_1, so as to lower the levers l_{10}, l_{11} to their initial positions, as shown in Fig. 12.

By properly threading rollers or washers on the box chain, so as to raise or lower fingers k, k_1, the boxes may be raised as desired. For instance, if two washers are placed on the box chain so as to come under these fingers, the lever l_{14} will assume the position shown in Fig. 12 and the first box on the

Digitized by Google

right-hand side of the loom will be level with the race plate. If a washer is placed under the finger k_1 and a roller in position to operate the finger k, the lever l_{14} will assume the position shown in Fig. 13, the second box in this case being level with the race plate; but if the roller operates the finger k_1 and the washer comes under the finger k, the lever l_{14} will assume the position shown in Fig. 14 and the third box will be level with the race plate. If two rollers are used and both fingers k, k_1 raised, the lever l_{14} will assume the position shown in Fig. 15 and the fourth box will be raised. This it will be understood operates only those boxes on the right-hand side of the loom, but by placing rollers or washers on the box chain so as to operate the fingers k_2, k_3, Fig. 10, the boxes on the left-hand side of the loom may be operated in a similar manner.

11. Fig. 16 is a front view of the boxes on each end of the lay, and shows the method of connecting them with the castings l_{20}, l_{22} on the ends of the box levers l_{14}, l_{16}, Fig. 11. The boxes n are fastened to the box rods n_1, on which are placed strong spiral springs n_2 that firmly press the sleeves n_3 against the nuts n_4 screwed to the ends of the box rods. The sleeves n_3 are free to slide through the castings n_5 when operated by the box motion. The lever l_{14} operates the boxes on the right-hand side of the loom by being directly connected to the sleeve n_3 by the castings l_{26}, l_{18}, but the casting l_{22} on the lever l_{16} that operates the boxes on the left-hand side of the loom is connected to the sleeve n_3 on the left-hand side by means of chains and rods l_{20}, the former running around sheaves l_{21}, l_{23}, l_{25}. In raising the boxes, it will be seen that since motion is imparted to the sleeves n_3, and not to the box rods n_1, the motion of the boxes is dependent on the springs n_2, and if the picker or a shuttle is caught in the boxes, the spring will be compressed and no damage or broken parts will result. The boxes drop by their own weight when released by the box motion, which is therefore only a semipositive motion.

12. Driving.—The motion of the boxes on a box loom is intermittent, since it is necessary that they should be at

Digitized by Google

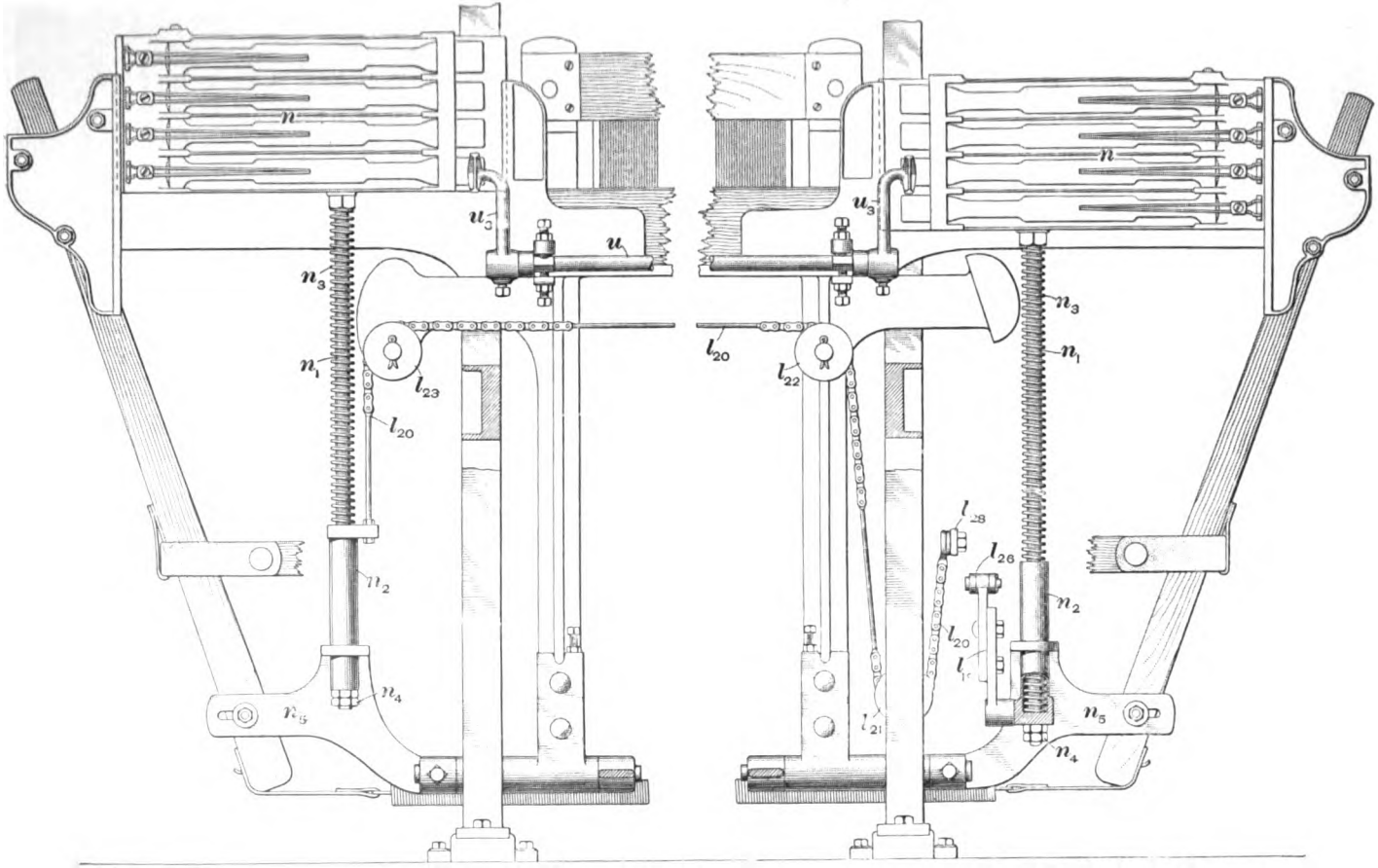

FIG. 16

Digitized by Google

rest while the loom is picking and until the shuttle is well boxed on the opposite side of the loom; hence, the motion of the cylinder gears m, m_1 must also be intermittent, so as to quickly change the boxes after the shuttle comes to rest, having them completely changed before the next pick of the loom. This intermittent motion of the cylinder gears is obtained in the following manner: Attached to the end of the bottom shaft of the loom is a segment gear m_2, Fig. 17, one-half of its circumference containing 14 teeth, one of which is a double tooth, while the other half is smooth. Attached to the bottom cylinder gear is a gear m_3 containing 14 teeth and a blank space into which the double tooth on the gear m_2 meshes. As the gear m_2 is rotated by the bottom shaft in the direction of the arrow, m_3 will remain stationary until the double tooth on m_2 comes around and engages it, whereupon it will be turned exactly one revolution, since m_3 and m_2 each contain 14 teeth; the cylinder gear will therefore make one revolution to each revolution of the bottom shaft, or in this case, as the crank-shaft and bottom shaft are equally geared, one revolution to each pick of the loom. During the time that the teeth of the gear m_3 are not in contact with the teeth of m_2, the cylinder gears are held stationary by a piece m_7, the end of which is recessed to fit the smooth concentric portion of m_2, thus making it impossible for m_3 to move. When the double tooth of gear m_2 begins to mesh with the blank space of

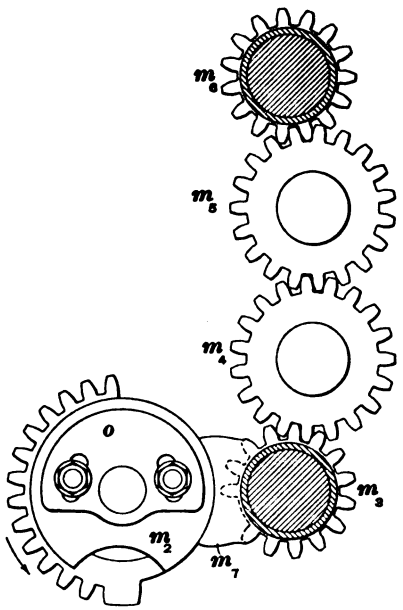

FIG. 17

Digitized by Google

gear m_3 one corner of the piece m_7 will move into the recess seen on gear m_3 and thus permit m_3 to rotate. The motion of the bottom cylinder gear is transmitted to a gear m_6 that is fastened to the top cylinder gear through two intermediate gears m_4, m_5; thus motion is imparted to both cylinder gears at the same time, but in opposite directions.

13. Lock-Knife.—During the time that the cylinder gears m, m_1 are imparting motion to the vibrator gears l_4, l_5, l_6, l_7, Fig. 11, the vibrator levers l, l_1, l_2, l_3 must be held securely in position, so that those vibrator gears that are down will be held securely meshed with the bottom cylinder gear m_1, and those that are raised, with the top cylinder gear m. This is accomplished by means of a lock-knife o_4, which is operated by a cam o bolted to the driving gear m_3 in such a manner that it engages the ends of the vibrator levers at the proper time and holds them in position. A casting o_3 loose on the stud o_{10} has an extended arm to which a spring o_7 is attached, and also carries a roller o_1 adjustably fixed in a vertical slot; the roller is operated on by the cam o which, as it revolves, alternately presses down the roller against the tension of the spring o_7, and allows the tension of the spring to raise the roller. The motion of the roller is, of course, imparted to the casting o_3 and also to the lock-knife o_4, although the latter is not directly connected to o_3, the arrangement being as follows: The lock-knife o_4 and the casting o_3 are cast in one piece that is loose on the stud o_{10}. Holes are bored through two extended lugs o_8, o_9 on the casting o_3, and these guide a plunger o_8, which is pressed by a strong spring o_9 into a recess o_{11} cast in the casting o_3. By this means the castings o_3, o_4 act as one piece, and the motion of the cam o is readily transmitted to the lock-knife o_4; but still should the lock-knife strike against the ends of the vibrator levers in such a manner as to be prevented from moving in far enough, no breakage of parts will occur, since in this case the plunger o_8 is forced out of the recess o_{11}, allowing the casting o_3 to be forced down by the cam without imparting any additional motion to the lock-knife.

Digitized by Google

14. Relief Motion.—The timing of the lock-knife and of the chain barrel g_{11}, Fig. 10, is such that when a new bar of the box chain is forced under the fingers k, k_1, k_2, k_3 the lock-knife is engaged with the ends of the vibrator levers. It will be seen, therefore, that if there were not some relief motion provided, some part of the fingers or their connections with the vibrator levers would be broken, since it is obviously impossible to raise any one of the fingers if the vibrator lever to which it is connected were held down by the lock-knife. To provide for this difference in the timing of these parts, the fingers k, k_1, k_2, k_3 are pivoted on a stud k_6 fixed in the end of an elbow lever k_5, which is fulcrumed on a stud k_7 and has a spring k_8 attached to its lower end. This spring is also fastened to the lower end of a lever k_{10}, the other end of which rests against a roller i_3 attached to the arm a_7 that operates the lifter of the shedding mechanism.

When a new bar of the box chain is forced under the fingers, their rear ends are raised, as shown in Fig. 10, against the tension of the spring k_8, although the spring is at this time comparatively slack, because the roller i_3 is then in its extreme position, as shown in the illustration.

The vibrator levers are not immediately raised when a new bar is forced under the fingers, but when the lock-knife is disengaged from them by its cam, the spring k_8 will pull the fingers k, k_1, k_2, k_3 down on the chain bar that is under them, the spring being under greater tension at this time, because the roller i_3 has moved to the left and forced the lower end of the lever k_{10}, to which the spring k_8 is attached, to the right. This allows the chain bar to make the proper selection of boxes to be raised, those fingers that are resting on a roller on the chain bar raising the vibrator levers to which they are connected, while those beneath which there is a washer allow the vibrator levers to which they are connected to remain down. A cam k_{10} to which a hand wheel k_{11} is attached is provided to operate on the lever k_5, so that the rear ends of the fingers may be conveniently held in a raised position when it is desired to place a new box chain on the loom.

Digitized by Google

15. Setting and Timing.—In setting any box motion, one of the most important points to be observed is to have each box, as it is raised or lowered, brought to the exact level of the race plate, since, if a box is too low, the shuttle, when leaving it, will strike the edge of the race plate, which will deflect its point upwards and be liable to result in its being thrown from the loom. The same thing will occur if the box is too high or if the back end of the box is very much higher than the front end, since, in these cases, the shuttle, in leaving the box, will strike forcibly on the race plate and rebound sufficiently to raise its point and throw it out. In leveling the boxes on the Crompton loom, the vibrator gears are first revolved so as to bring the fourth box into position, as shown in Fig. 15, and if the box is not exactly level with the race plate, the boxes are raised or lowered as required, until the correct position is obtained, the adjustment being made in this case by means of the nuts n_4. After having adjusted the fourth box, the vibrator gears are revolved so as to bring the first box into position, as shown in Fig. 12, and if this box is not exactly level with the race plate, it may be leveled by loosening the bolt l_{13} and adjusting the casting l_{14} so as to bring the boxes into the desired position. In leveling the first box, the fourth box is liable to be thrown out of level, so that the boxes should be returned to the initial position and the fourth box again adjusted by means of the nuts n_4; then, in order to insure the first box remaining level, it should be brought into position again and further adjusted by means of the casting l_{14}. After having adjusted the fourth and first boxes, the boxes are returned to the first-box position and the third box is then raised, as shown in Fig. 14. If this box does not come exactly level with the race plate, it may be adjusted by means of the stud l_{11} until perfect. Next, the boxes are returned to the first-box position and the second box then raised by means of the vibrator gear that operates the lever l_{10} with stud l_{12}, as shown in Fig. 13. In this case it will be generally found that the adjustment of the stud l_{11} to level the third box will also effect the leveling of the second box without further adjustment;

Digitized by Google

but should this not be so, the second box may be leveled by carefully adjusting either the stud l_{11} or the small bracket l_{10}. The object of this bracket is for fine adjustments of the second box, as explained, and also for further adjustment when the box chain wears by constant use. After leveling the boxes on one end of the lay, those on the other end should be leveled, which may be accomplished by adjusting the levers that operate them in the same manner as in the first instance.

The timing of the box motion is accomplished by means of the gear m_3, Figs. 11 and 17, that is fastened to the bottom shaft and imparts motion to the cylinder, or quill, gears m, m_1. To accomplish this timing, the lay is brought up until the daggers of the protector motion just touch their respective knock-off levers; then the gear m_3 is loosened and turned until the boxes move $\frac{1}{8}$ inch, whereupon the gear should be securely fastened to the bottom shaft. The box motion should be timed in this manner irrespective of the movement of the chain cylinder of the shedding and box mechanisms. In timing the lock-knife o_4, Fig. 11, the cam o should be loosened and turned so that the lock-knife will have returned to its locked position, engaging the ends of the vibrator levers, just before the cylinder, or quill, gears start to move, after which the cam should again be securely fastened.

PICK-DISCONNECTING DEVICE

16. Whenever the pick is lost or it is desired to make a pick-out, the reverse mechanism is thrown into operation, as previously explained; but when this is to be done it is necessary that the picking motion should be disconnected, so that as the sheds are reversed the picker sticks will remain idle, with the shuttles at rest in the boxes. This allows the sheds to be reversed and the pick-out made without the shuttles interfering with the weaver. The boxes, however, are worked back with the sheds, so that when the loom is started again the proper color of filling will be inserted in the cloth. The pick-disconnecting mechanism is

Digitized by Google

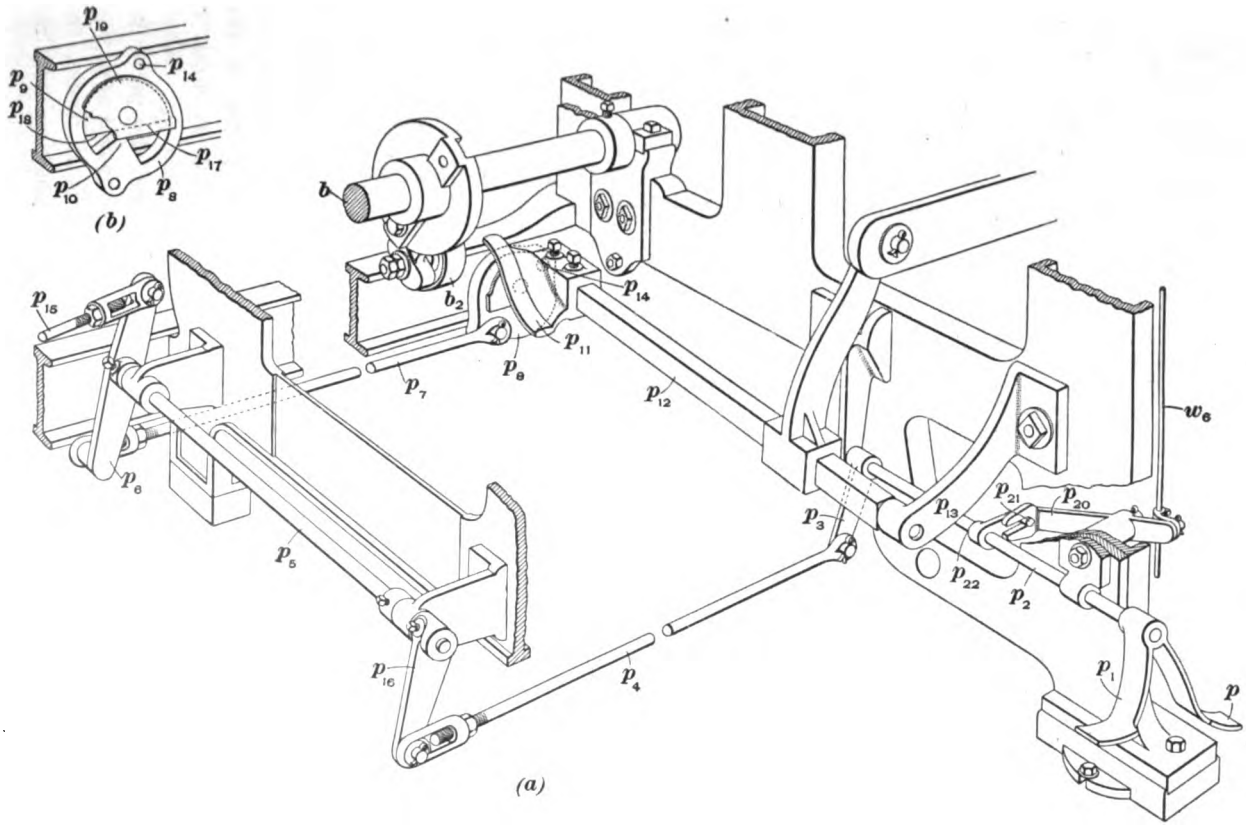

FIG. 18

Digitized by Google

shown in Fig. 18 (*a*) and (*b*). One end of the picking shaft p_{13} is carried in the ordinary manner by a casting p_{12}, but the other end is centered at p_{14} in a casting p_8 that is in the shape of a ring and fits over a stationary semicircular casting p_9, Fig. 18 (*b*), on which it may turn. Attached to the lower end of the casting p_8 is a rod p_7, Fig. 18 (*a*), that connects it with a double-ended lever p_6. A similar rod p_{15} attached to the upper end of this lever is connected with a similar arrangement on the opposite side of the loom, with the exception, of course, that these parts are of the other hand. Lever p_6 is fastened on a shaft p_5, to which is also fastened a casting p_{16}, connected by a rod p_4 with another arm p_3. This arm is fast on a shaft p_2, to which is also attached a double treadle p, p_1. When the part p of the treadle is forced down by the weaver's foot, the rod p_7 will pull the lower end of the casting p_8 to the left, throwing the upper end, in which the picking shaft p_{13} turns, to the right and drawing the picking shoe p_{11} out of the plane of the pick ball b_2, so that as the latter revolves with the bottom shaft b it will not come into contact with the picking shoe.

When, on the other hand, the treadle p_1 is stepped upon by the weaver, the upper end of the casting p_8 will be forced to the left and the picking shoe p_{11} thrown under the pick ball b_2, so that as the bottom shaft revolves the pick ball will strike the shoe and operate the picker stick. The extent of movement of the picking shaft and picking shoe is governed by a projection p_{10}, Fig. 18 (*b*), on the casting p_8. This projection strikes against the stationary semicircular casting p_9 at p_{17}, when the picking shoe p_{11} is directly under the pick ball b_2 so as to be operated by it, and against p_{18} when the pick shoe is moved from the plane of the pick ball. A plate p_{19} attached to the casting p_8 holds it in contact with the stationary semicircular piece p_9. When the weaver desires to make a pick-out or find the pick, the reverse lever of the shedding mechanism is thrown over and the treadle p stepped upon. After the pick is found, the reverse lever is put back in its original position and the treadle p_1 stepped upon.

Digitized by Google

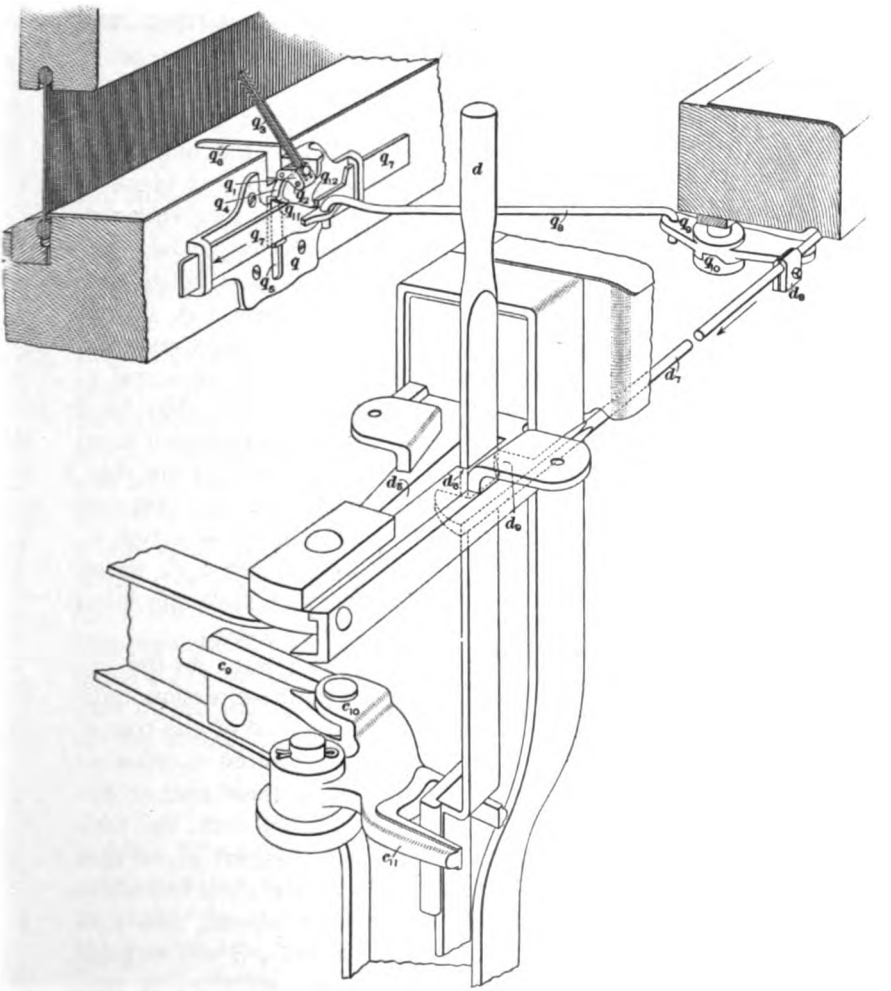

FIG. 19

Digitized by Google

FILLING STOP-MOTION

17. The Crompton loom is equipped with a filling stop-motion of the type known as a *center stop-motion*. The motion is so arranged that the filling fork feels for every pick of filling, and if any pick is missing the loom is stopped; the arrangement of this mechanism is shown in Fig. 19. A casting q screwed to the lay of the loom supports a block q_1 on a pivot q_2. Attached to this block is a two-prong fork q_3 and also a small piece q_4 that slides in a slot q_5 in the casting q. The fork q_3 is free to fall in a groove q_6 cut in the lay, provided that the pick of filling does not support it and prevent this taking place. A sliding piece q_7 is also supported by the casting q and is engaged by the piece q_4; it is also connected by means of a rod q_8 with a lever q_9, which is loosely supported on a stud fixed beneath the breast beam. The lever q_9 is prevented from turning in one direction by a clutch q_{10} attached to the stud, but is free to move in the opposite direction. Its opposite end is in contact with a small dog d_8 fastened to a rod d_7. This rod is in contact with the shipper lever d, which is retained in the position shown in Fig. 19 while the loom is running, by means of the notch d_8 in the slot d_5.

The action of this mechanism is as follows: As the lay moves forwards, the slide q_7 is moved in the direction indicated by the arrow, because the opposite end of the rod q_8 remains stationary. The fork q_3 will be lowered as soon as the piece q_4 comes into contact with the inclined part of the slide. Should a pick of filling be under the fork, the fork will be supported by it and will in turn support q_4, so that the part q_{11} of the piece q_4 will clear the notch q_{12} in the slide. Should, however, the pick of filling be absent, the fork will drop in the groove q_6 in the lay and q_{11} will engage the notch q_{12}. When this happens, the slide q_7 is prevented from moving in the direction of the arrow, and as the lay moves forwards the lever q_9 will be turned in such a direction that it will push the piece d_8 and rod d_7 in the direction of its arrow. As this takes place, an inclined

Digitized by Google

piece d_6 on the rod d_7 forces the shipper handle d out of its retaining notch, and it springs to the end of the slot d_5, disconnecting the power from the loom and checking its motion.

SETTING AND TIMING THE FILLING STOP-MOTION

18. In setting the filling stop-motion, the first consideration is to see that the prongs of the fork q_3 are not bent and that the fork falls freely into the groove q_4 in the lay without touching either side. The fork, where it is swiveled on the pivot q_5, should be well oiled and the slide q_7 and shoe q_{11} engaging with it should work freely. In setting the filling stop-motion, the lay is pushed back so that the crank-shaft will be on the back center; the slide q_7 is then placed at the point where it will have just moved the shoe q_{11} up to the highest position and thus have raised the filling fork to its extreme height. The stand under the breast beam that carries the stud on which the lever q_6 is fixed is next loosened and adjusted so that the lever will be at right angles to the breast beam. With the shipper handle pulled on, the clamped collar d_6 on the shipper rod d_7 is set against the lever q_6. In pulling on the shipper handle to do this, it will be necessary to either throw off the belt or temporarily disconnect the shipping mechanism, in order not to start the loom. If the piece q_{11} is not now just at the commencement of the highest part of the slide q_7, a fine adjustment can be made by means of the clutch, or cam-collar, q_{10}.

PROTECTOR MOTION

19. The object of the protector motion is to check the motion of the lay and stop the loom in case the shuttle fails to reach the opposite box and is left in the shed. The mechanism is arranged as follows: A protector rod u, Fig. 20, carried in bearings on the front of the lay is equipped with a spring u_1, one end of which is attached to a collar setscrewed to the protector rod, while the other end is fastened to the lay. This spring tends to force the protector finger u_3, setscrewed to the rod, toward the binder

Digitized by Google

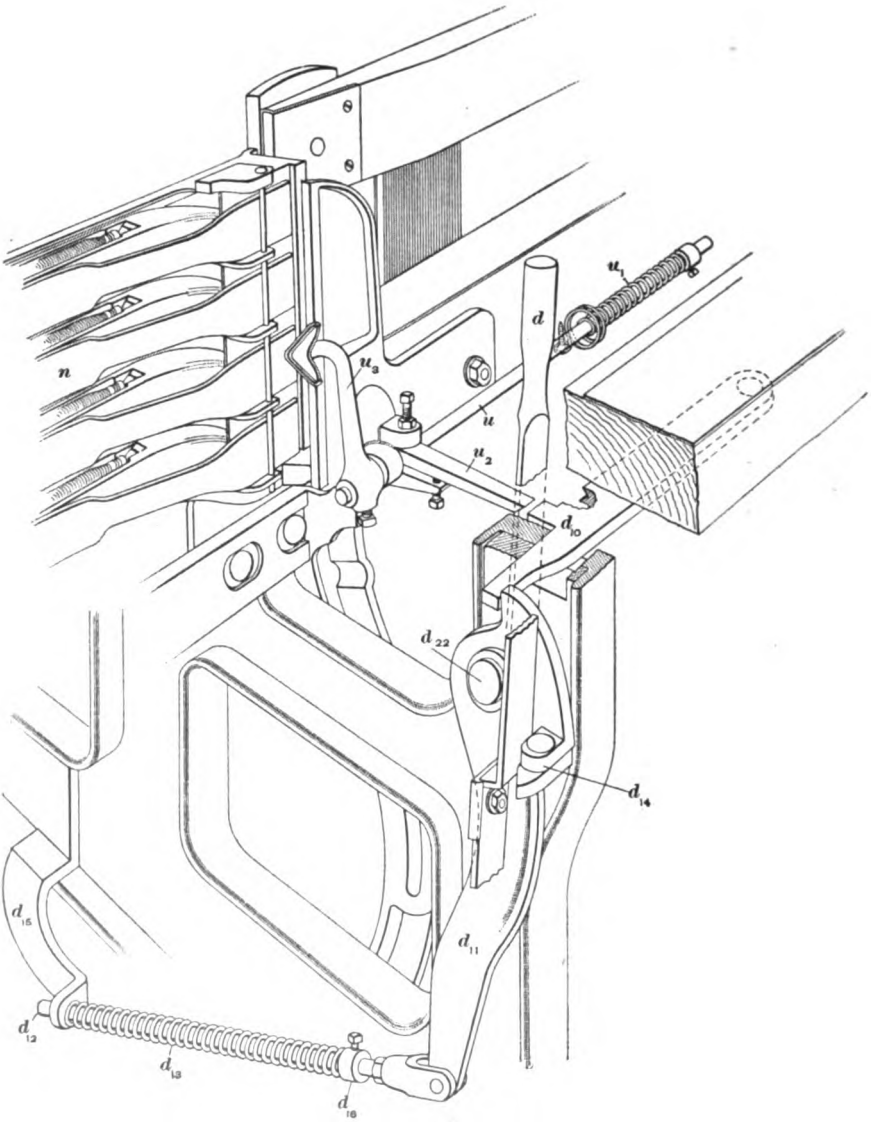

FIG. 20

Digitized by Google

of the shuttle boxes. Two daggers u_2, one on each side of the loom, are also attached to the protector rod. If the shuttle enters the box properly, the protector finger will be pushed forwards and the dagger will be lowered so that it will pass under a grooved lever d_{16} pivoted just beneath the breast beam; but in case the shuttle does not enter the box, the spring u_1 will keep the protector finger pressed against the binder and the dagger will remain in a raised position, so that as the lay comes forwards it will engage the lever d_{16}. The end of this lever is in contact with a lever d_{11} carrying a projection d_{14} and pivoted on stud d_{22}. Its lower end is attached to the rod d_{12} that slides through the casting d_{18}.

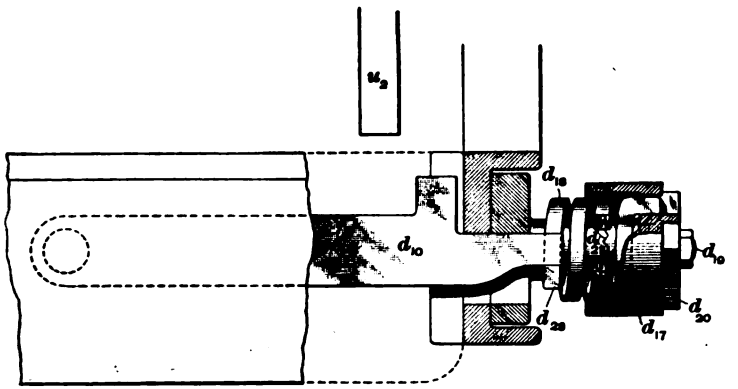

FIG. 21

Setscrewed to the rod d_{12} is a collar d_{15} against which rests one end of the spring d_{13}, the other end resting against the casting d_{18}. As the dagger comes into contact with the lever d_{16}, the projection d_{14} forces the shipper handle toward the rear and out of its retaining notch, so that the loom is stopped, the spring d_{13} serving to cushion the blow of the dagger. The cushioning device may be regulated by means of the collar d_{15}, which if moved on the rod d_{12} toward the casting d_{18} increases the tension of the spring and consequently its cushioning effect.

The arrangement for cushioning the blow of the dagger on the opposite side of the loom is slightly different, as shown in

Digitized by Google

Fig. 21. In this case the end of the lever d_{10} is in contact with the projection d_{11} on a very strong spiral spring d_{12}, which, as the dagger strikes the lever, serves to cushion the blow of the lay. This spring is carried in a casing d_{13}, so arranged that the spring can be tightened or loosened by placing a wrench on the nut d_{14} on the head of the casing, loosening the check-nut d_{15}, and turning the casing around, after which the check-nut can be tightened, the casing being held in any position by means of its toothed edge, as shown at d_{16}.

SETTING THE PROTECTOR MOTION

20. Care should be taken that the protector motion is kept in good working order and properly adjusted; otherwise a serious smash, involving considerable damage to the warp and consequent loss of time, is liable to occur. In setting the protector motion, the tension of the spring u_1 should be so adjusted that the dagger will be firmly held in a raised position so as to engage the groove in the levers d_{10} as the lay is brought forwards. Next, with the shuttles out of the boxes, the projector fingers u_2 are adjusted so that they will just touch the binders of the shuttle boxes; the shuttles are then placed in the boxes, and if the protector motion is properly set, the daggers will be lowered so as to clear the levers d_{10}. The protector motion should be adjusted so that it will work properly in connection with each box of the loom, and if necessary some of the binders may be bent slightly to secure a proper movement of the protector finger.

TAKE-UP MOTION

21. The take-up motion on the Crompton loom is arranged as shown in Fig. 22. The cloth passes over the breast beam, under the take-up roll v, which is usually covered with perforated steel fillet, over a guide roll v_1, and thence down under the cloth roll y, on which it is wound. Motion is imparted to the take-up roll as follows: Attached to the lay sword is a roller w working in a slotted arm w_1 that imparts motion to another arm w_2; both arms are attached to the same stud and act as an elbow lever. Attached to w_2 is a

Digitized by Google

rod w_3, on the end of which is fixed a pawl w_4 that engages with a ratchet gear w_7. Fastened on the same shaft as the latter is a change gear w_8 that meshes with a 60-tooth gear w_9 fast on another shaft. Fast to this same shaft is a

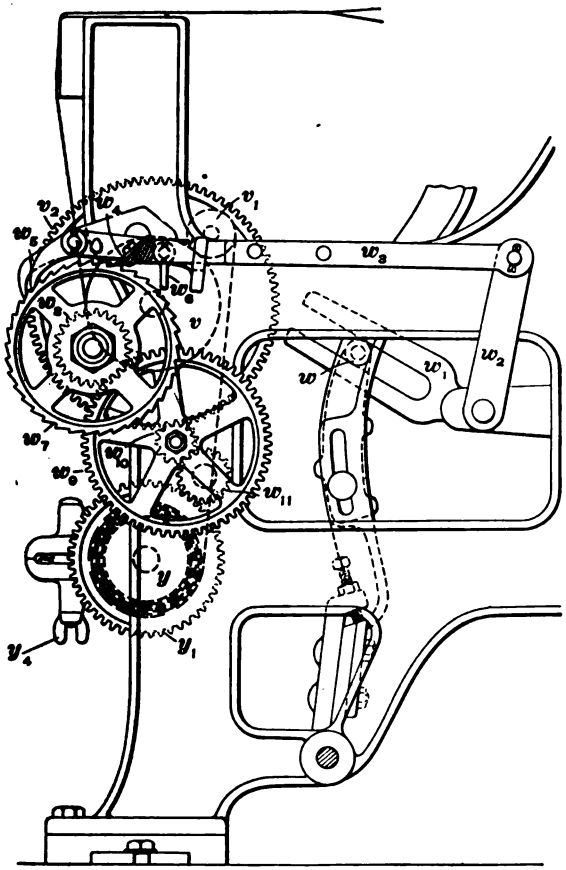

FIG. 22

12-tooth gear w_{10} that meshes with an 80-tooth gear v_1 fast to the shaft of the take-up roll. As the lay moves forwards, the roller w depresses the lever w_1, throwing the arm w_2, rod w_3, and pawl w_4 forwards and turning the ratchet gear forwards a distance of 1 tooth. This operates through

Digitized by Google

the train of gears mentioned and turns the take-up roll forwards; the repetition of these movements brings the cloth down over the breast beam at a uniform rate of speed. A double set pawl w_8 prevents the ratchet turning backwards when the lay sword moves back and the rod w_9 and pawl w_8 are moved in the opposite direction.

In this take-up motion, the number of picks per inch in the cloth is altered by changing the ratchet gear w_7 for one of more or less teeth, as desired. Two sizes of change gears w_6, containing either 24 or 12 teeth, may be used; if a 24-tooth change gear is used, the number of teeth in the ratchet

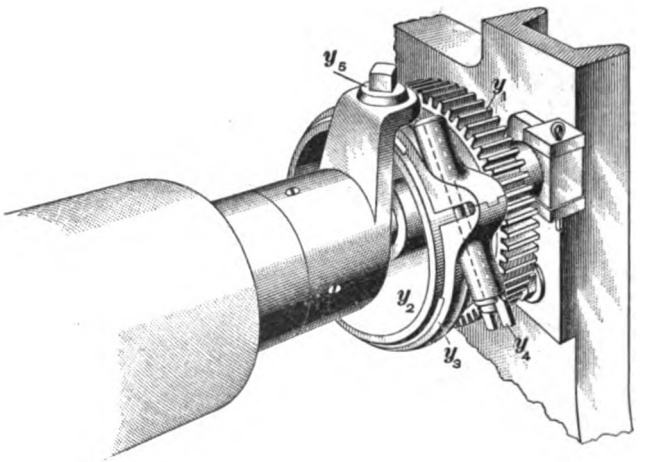

FIG. 23

gear w_7 indicates the number of picks per inch in the cloth, but if a 12-tooth change gear is used, there will be twice as many picks per inch in the fabric as there are teeth in the ratchet gear.

The cloth roll is driven by means of the gear w_{10}, which besides meshing with v_8 also meshes with the intermediate gear w_{11} that drives the gear y_1 loose on the shaft of the cloth roll. Attached to this gear is a drum y_2, Fig. 23, around which a friction band y_3 fastened to the cloth roll at y_4 is placed. By tightening or loosening this friction by means of a thumbscrew y_5, the cloth may be wound on the

Digitized by Google

cloth roll with any desired tension; but it is always best to have the tension of the cloth between the guide roll v_1, Fig. 22, and the cloth roll y a little less than the tension of the cloth between the take-up roll v and the breast beam, since, if this is done, there will be no danger of the backlash in the gears resulting in uneven cloth.

In order to disengage the take-up motion while the loom is being reversed for the purpose of picking out or finding a loose pick, the following arrangement is provided: A lever w_{11}, Fig. 24, is fulcrumed on a stud w_{12} and has a slotted portion supporting the take-up rod w_3. Attached to

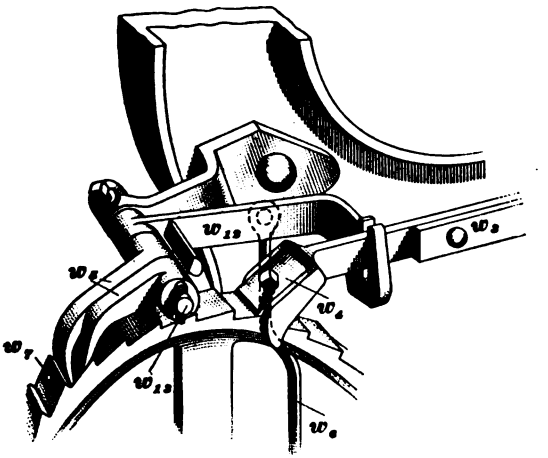

FIG. 24

this lever is a rod w_6 that, as shown in Fig. 18 (a), is attached to a lever p_{30}. This lever is operated on by a pin p_{31} fixed in an arm p_{32} and engaging with a slot in the extremity of p_{30}. Thus, as the treadle p is pressed down by the weaver when the picking motion is disconnected, the rod w_6 is raised, which results in the rod w_3, Fig. 24, being raised and the pawl w_4 being disengaged from the ratchet gear w_7. Consequently, if the loom is run with the picking motion disconnected, the pawl will not be in contact with the ratchet and the cloth will not be wound down by the take-up motion.

Digitized by Google

LET-OFF MOTION

22. The warp let-off motion on the Crompton loom is a regular friction let-off, with the exception that a system of double leverage is used. This arrangement, as shown in Fig. 25, consists of a friction strap x_1 passing around the beam head x. One end of this friction strap is attached to the lever x_2 fulcrumed at x_3, while to the other end of this lever a rod x_4 is attached. This rod is connected with the end of a lever x_5 fulcrumed at x_6 and supporting at its other extremity a rod x_8 on which weights x_7 are placed. The degree of friction on the beam may be regulated by the number of weights placed on the rod. If a greatly increased amount of friction is desired on the beam, the rod x_4 may be moved from the extremity of the lever x_5 to a position nearer its fulcrum, as indicated by the dotted lines in the illustration. In this case, the distance from the fulcrum to the rod being shortened, the tension on the friction band is greatly increased.

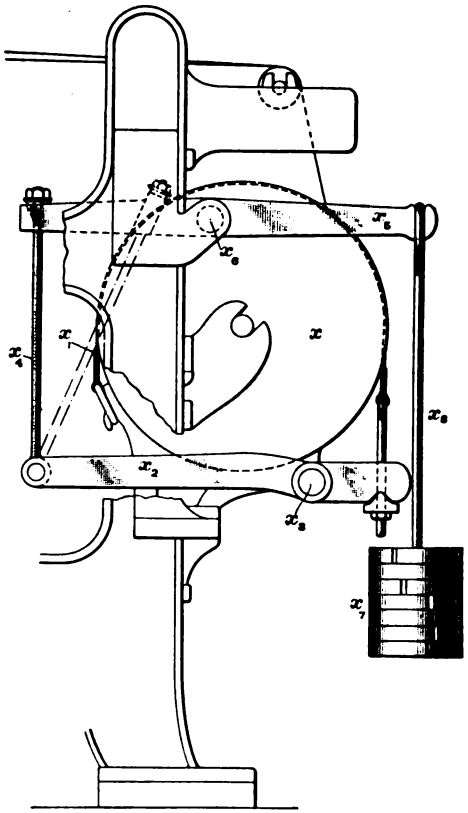

FIG. 25

Digitized by Google

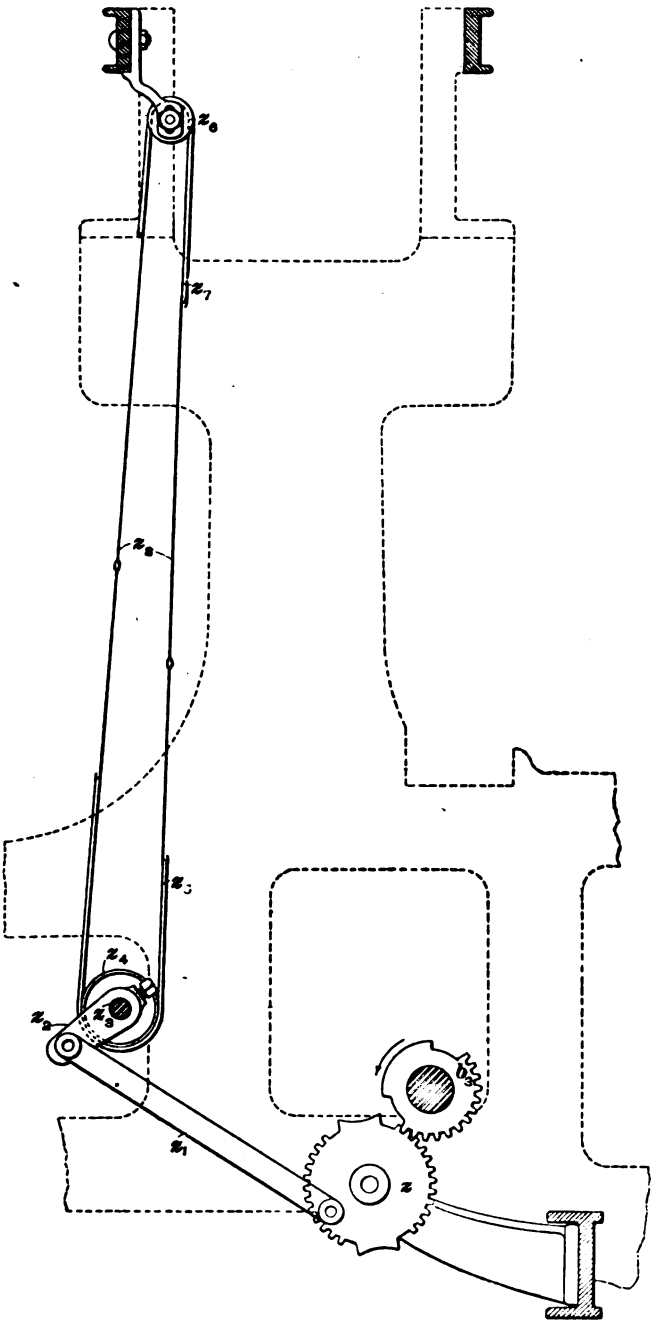

FIG. 26

Digitized by Google

SELVAGE MOTION

23. In cases where a fabric is being woven with a loose weave, it is desirable to use a selvage motion for producing the selvages, since in this manner a much firmer and better selvage can be obtained. The selvage motion applied to the Crompton loom is shown in Fig. 26. Attached to the bottom shaft of the loom is a segment gear b_3 that engages with another correspondingly cut gear z attached to a separate shaft. Fastened to this latter gear is a rod z_1 that connects with an arm z_2 setscrewed to the shaft z_3, which extends across the loom. Attached to this shaft at each side of the loom is a boss z_4, to which is attached a strap z_5. A similar boss z_6 carried on the arch of the loom supports a strap z_7 and the selvage heddles z_8, which are also attached to the strap z_5. As the bottom shaft revolves with the gear b_3 driving gear z, the connecting arm z_1 produces a partial rotary motion of the shaft z_3, by means of the arm z_2, which serves to raise and lower the selvage heddles and ends. The gear b_3 will drive the gear z until the portion that has no teeth comes in contact with the portion of the gear z that has no teeth, whereupon a dwell will be imparted to the selvage motion. The selvage harnesses in this case are open to their greatest extent.

TIMING THE SELVAGE MOTION

24. The principal point to be noted in timing the selvage motion is to have the selvage ends move in unison with the bulk of the warp, which may be accomplished by loosening the gear b_3 on the bottom shaft and turning it so that with the lay 1 inch from the fell of the cloth the selvage ends will just start to open with the body of the warp to form the shed, whereupon the gear should be tightened in this position.

If the selvage ends do not rise and fall an equal distance, so as to move with the rest of the warp uniformly, the arm z_2 may be loosened and the shaft z_3 turned until the selvage heddles assume the proper position.

Digitized by Google

WOOLEN AND WORSTED LOOM FIXING

INTRODUCTION

1. The Loom.—Among the many machines in a textile mill that are subject to a large number of defects in their operation, imperfections in their product, or breakages of their parts, perhaps none is more often at fault than the **loom.** Imperfections in the work and diminished production in the majority of textile machines are often due to an inherent defect in the stock or some obvious wrong adjustment of the machine; but with a loom, the trouble in the majority of cases is with the machine itself, and in very few instances is the cause obvious. One reason for this is that most machines continue in operation even when producing defective work, thus permitting one to study their action and find out exactly what the difficulty is. With a loom, however, improper adjustments or other defects will, in a great many cases, cause the machine to instantly stop, leaving the fixer in doubt as to the cause of its action; if started again, it is liable to continue in operation for an indefinite length of time and seem to be in perfect working order, but may go wrong again as soon as the fixer's attention is withdrawn. A very trivial defect in a loom will, in many instances, cause the machine to operate unsatisfactorily, to stop, or make some serious imperfection in the woven fabric. Often a change in the humidity of the atmosphere will cause trouble with looms that have been in practically perfect operation.

For notice of copyright, see page immediately following the title page

Digitized by Google

The reason for this sensitiveness of a loom lies, of course, in the great variety and complication of the movements necessary in weaving machinery. Many of these movements also are crude and hence particularly liable to give trouble, as, for instance, the picking motion, which perhaps requires more care than any other part of a loom. Although this motion has been greatly improved in the form and construction of its parts, it has undergone little change in principle since the introduction of the first power loom. It is a powerful and noisy mechanism driving a heavy shuttle with great force, and all for the purpose of laying across the loom a pick of filling weighing frequently less than a grain. The amount of energy expended is out of all proportion to the amount actually required; yet no improvement in the principle of picking seems possible without adding greatly to the complication of the mechanism and impairing its practical value.

Other parts of a loom also are prone to give trouble—some on account of their delicacy and sensitiveness, others because of wear and improper care and adjustment—while all require accurate setting and timing, a slightly wrong adjustment of one part sufficing in many instances to render valueless the accurate adjustment of other parts. It will be found also that in many cases a combination of several slight faults in adjustments, not one of which is important in itself, will interfere with the operation of the loom. Each and every part of a loom has its particular work to perform, and yet each part must at all times act in harmony with the other parts; consequently, to lay down hard and fast rules for overcoming any one of the many difficulties that are sure to confront a loom fixer is impossible. However, by considering those difficulties that are most frequently met, and by carefully studying the different circumstances that may cause them, some help may be given to the student.

2. The Loom Fixer.—Since looms are so peculiarly liable to get out of order, every mill maintains a body of men known as *loom fixers*, each of whom has charge of a number of looms, known as a *section*. The number of looms

Digitized by Google

in a section depends to a great extent on the kind of looms and the variety of cloth being woven. Generally, in a mill making fancy woolen or worsted goods one fixer has charge of from sixteen to twenty looms; this number may vary in different mills according to the class of fabric being woven. The duties of a loom fixer are, briefly, to keep the looms in his section running and producing cloth of good quality; he is expected to remedy all faults in the operation of the looms and to make all ordinary repairs, although his duties should be confined to fixing and he should not be required to repair looms that need the services of a skilled machinist; he is also required to set up and start new looms, and to put the warps into the looms and make them ready for the weaver.

A good loom fixer occupies a position of importance in a weave room; for on him, as much as on any one else, depends both the quantity and quality of the cloth produced. To be successful, he should be a fair mechanic and a good weaver. Not only must a loom fixer understand how the various parts of a loom should be adjusted in order to run to the best advantage, but he should also thoroughly understand the manner in which these parts are assembled, in order that he may remove and replace broken parts of a loom with as little loss of time as possible. It should be the object of every fixer to see that the looms in his section attain the highest possible percentage of production, and in order to accomplish this he should always be careful to have the loom stopped for repairs as little as possible. He should see that the weavers keep the looms well oiled, since if the parts that are constantly working against each other are allowed to become dry the wear on the loom and the amount of fixing necessary is greatly increased.

In those mills that are constantly changing from one class of goods to another, a fixer should study the different fabrics that are being woven and note just what conditions are necessary to weave each to the best advantage; cloths of different weights and woven with different yarns and weaves require in many cases different settings of the various parts of the looms. A good fixer will also carefully ascertain the

Digitized by Google

cause of any trouble with the operation of the loom before attempting to remedy it. He will never alter various parts nor change the adjustment or setting of the different motions with the expectation of remedying the difficulty by chance. When a loom has been running perfectly for some time and all at once commences to exhibit some fault, it is evident that some one thing, and that probably something of a trivial nature, is the trouble, and by carefully ascertaining what this is in the first place the fixer avoids changing parts of the loom that are perfectly adjusted and well adapted to the work in hand; when the cause of a defect is found it is generally but a moment's work to remedy it.

Whenever a new difficulty is encountered, the fixer should study the case carefully until he finds the exact cause. If new difficulties are not thoroughly mastered at the start, the fixer learns nothing, and when the same difficulty arises the second time there will be the same trouble in fixing the loom.

A good loom fixer will constantly be on the lookout for worn parts on the looms of his section, and be ready to replace these when necessary. By this means breakage of parts will be prevented, in many cases serious smashes avoided, and the fixer will not be so much sought after by the weaver. This will be found the cheaper method in the end, since while a certain small part may be replaced at slight expense, if it breaks while the loom is in operation other parts may be broken or injured.

ERECTING AND STARTING LOOMS

3. In starting new looms, it is first necessary to decide on their arrangement in the weave room. The usual custom is to have two rows of looms face a narrow alley, in which the weaver stands; a wider alley is left between the backs of two rows so as to allow the beams to be easily brought to the looms on a truck when it becomes necessary to replace an empty beam with a full one. If the looms are right- and left-handed they should be alternated in each row, so that the driving belts of two looms will come together.

Digitized by Google

After the general arrangement of the looms is decided, each loom must be lined with the driving shaft so that the belt will run true; this may be accomplished in the following manner: A plumb-line is dropped from two somewhat distant points on the driving shaft and from the points thus found on the floor a distance is measured equal to the distance that the looms are to be placed from the shaft. Between the two points thus obtained a mark may be made on the floor, with a chalk line, that will be exactly parallel with the driving shaft; if a permanent mark is desired, it may be scratched on the floor with a knife. The looms are now arranged with their feet just touching this line, in which position they will be perfectly square with the shaft. A spirit level should next be placed on the breast and back beams and on the loom sides and the loom carefully leveled, so that the crank-shaft and bottom shaft will not bind in their boxes. This may be accomplished by placing packing of the required thickness under the loom feet, after which the loom should be securely fastened to the floor with coach screws, or lagscrews.

The loom is now ready to be belted; to obtain the length of belt required any convenient method may be adopted, though it should be borne in mind that as new belts will stretch in the course of a few days, the belt should be cut 1 or 2 inches short, so as to be rather tight at first. The best way to fasten loom belts is by means of malleable-iron belt clasps, since when fastened in this manner they wear longer; and in addition, a belt with a belt clasp can be placed on the loom in a mere fraction of the time that is required to lace it. Care should be taken in putting on a belt clasp to prevent its being flattened; the belt should be hammered and not the clasp. It is a good plan to place a piece of leather or wood on the belt when fastening the clasp; this will prevent turning the points of the clasp, and also will prevent injury to the belt.

Belts should be run with the grain, or hair, side next to the pulleys. Loom belts should be neither too tight nor too loose, since in the former case the loom will run very rigidly, while if the belt is too loose it is liable to slip and cause a loss of power. When the loom runs rigidly, every slight variation of

Digitized by Google

speed is immediately felt by the loom, and it is also difficult to adjust the different mechanisms, especially the picking motion, so that they will run smoothly and easily. On the other hand, when the belt is loose, it will slip when the power is most needed, that is, when the loom is just starting to pick. If the belt slips at this point, the shuttle will receive a weak impulse, and, as explained later, serious difficulties arise from this cause. If the belt is very loose, the loom will run with a variable motion that is detrimental to good work.

Loom belts should be kept clean and pliable, and for this reason should be occasionally cleaned by lightly holding a piece of fine card clothing against them so as to remove the accumulation of dirt and gummy matter. For convenience in holding, the card clothing may be attached to a small piece of wood. Crossed belts do not require this treatment, as they are kept clean by the face of the belt being constantly rubbed where the belt crosses. To keep them pliable, belts should be frequently dressed with either liquid or bar belt dressing; castor oil is one of the best dressings for leather belts.

4. After the belt is on the loom, a reed should be placed in the lay, empty shuttles in the boxes, harnesses connected with the shedding mechanism, and box and harness chains put on; the loom should then be thoroughly oiled and allowed to run for half a day without a warp. This allows the machine to become thoroughly limbered up, and if it is carefully watched during this time many minor adjustments can be made and bolts tightened that would otherwise cause more or less trouble after the warp was in the loom and cloth was being woven. In running a loom in this manner, it will be necessary to fill the groove in the lay with waste, so that the filling fork cannot drop into it and stop the loom.

PUTTING IN WARPS

5. It is the fixer's duty to put warps in new looms and also to remove the harnesses and warp beam from old looms and put in new warps. In putting in a warp, after having removed the empty harnesses and beam, the full warp, with

Digitized by Google

the harnesses and reed attached, is brought to the loom on a truck especially designed for that purpose. One of the journals of the beam is run directly on to the bearing prepared for it at the back of the loom and the other is then lifted into its bearing. The harnesses and reed are lifted over the whip roll and supported by two strips of board so placed that they rest on the whip roll and reed cap. The harnesses are then hooked to the straps that connect them with the top of the harness jacks and these strips of board removed. One let-off friction band is placed around the beam head, so as to hold the warp beam steady, and bunches of warp yarn are then tied to the **apron**; this is a strip of strong cloth long enough to be passed around the take-up roll and over the breast beam; it is either made with holes in it or is torn in strips at the free end. On tying the bunches of yarn to the apron, care must be taken that all the ends are drawn forwards with equal tension before being tied. The beam is then loosened and turned forwards and the warp drawn forwards a short distance by turning the ratchet gear by hand. The reed is set into the groove in the lay and the reed cap set down on top of the reed and securely fastened, care being taken to place the reed in the proper position with relation to the warp.

The harnesses are carefully evened by hooking them in the correct holes in the straps that connect them with the harness jacks, and they are then connected, by means of straps underneath, with the other end of the jacks. After putting both friction bands on the beam, the warp may be placed in the temples and the loom turned over a few picks by hand, after which a shuttle with some coarse filling may be placed in the loom and a few inches of cloth woven; a bobbin containing white yarn should then be placed in the shuttle (if the warp is dark) and a heading of 3 or 4 inches woven; this will greatly assist in showing mistakes in the drawing in of the warp, if there are any. If the warp is white, a bobbin containing dark yarn should be placed in the shuttle. After this is done, all the harnesses should be dropped and the lay pushed as far back as it will go; each

Digitized by Google

harness should then be raised in turn, so as to afford an opportunity to inspect the yarn and to see if each thread is in its proper place. When this has been attended to properly, the right kind of filling can be put in the shuttles, the picks per inch regulated by means of the take-up motion, the tension of the let-off motion adjusted, and if the proper harness and box chains are on the loom it is ready for the weaver. The fixer should watch the loom for 5 or 10 minutes after it is taken by the weaver, and if everything is going all right it can then be left in the weaver's charge.

LOOM MECHANISMS AND THEIR DEFECTS

SHEDDING MECHANISM

HARNESS SKIPS

6. As a general rule, the **shedding mechanism** of fancy woolen and worsted looms when once set and adjusted properly gives but very little trouble, especially if the loom is not an old one and the various parts are but little worn. When, however, a loom has been in operation for a considerable length of time and the different parts have become worn and loose, there is often more or less difficulty in making it properly perform its work. This difficulty is usually shown by the loom making what are known as *harness skips*.

A **harness skip** is an imperfection in the cloth caused by a certain harness (or possibly there may be more than one harness that is giving trouble) failing to rise or fall as required by the pattern chain, thus allowing the warp yarn that is controlled by that harness to float over or under one or several picks that it should not.

On a Knowles loom, harness skips are sometimes due to the lock knife failing to hold the ends of the vibrator levers securely in position. This may be caused either by the

Digitized by Google

knife itself being very badly worn, in which case it should be replaced, or by the ends of the vibrator levers themselves becoming worn. When the work is heavy and the strain on the harnesses in being lifted is severe, the tension of the spring on the lock knife may be insufficient to hold it in position. It often happens also that the rod that supports the back ends of the vibrator levers is bent or loose so that the riser on the pattern chain fails to lift the vibrator gear into the top cylinder gear properly; or if the rod is bent backwards in the center, certain of the vibrator levers may slip off the lock knife. In the case of very old looms, the teeth on the vibrator gears or on the cylinder gears, especially the starting, or first, teeth, become worn so that the vibrator gear is not fully turned but slips off and rebounds when the harness is partly moved. Again, the vibrator levers themselves may become bent so as to bind against each other or in the comb, or guides, through which they pass. In this case the vibrator lever is slow in dropping when it is required to lower the harness, and sometimes fails to assume its lower position in time to allow the vibrator gear to properly engage the bottom cylinder gear. It frequently happens also that a spindle in the pattern chain becomes bent, which is a very common cause of harness skips, as well as being liable to make a serious smash in the head-motion.

Occasionally the springs on the followers that press down the vibrator levers will drop out, and harness skips will often occur from this cause. Other parts, such as rivets and nuts, will sometimes work out and become caught in the head-motion so as to make a harness skip. Usually when this is the case, only one harness skip is made, and then the loose part drops through to the floor and gives no further trouble, at least for some time, although some future difficulty may apprise the fixer that a particular rivet or nut is gone, and he will then understand what made the harness skip for which he could not find the cause. Sometimes a riser on the pattern chain may become broken or mutilated so that it fails to raise the vibrator lever sufficiently to allow the vibrator gear to properly engage the top cylinder gear.

Digitized by Google

7. Often harness skips are occasioned by a combination of circumstances, any one of which alone would not cause any great difficulty; for instance, when several gears are loose or when the gear-teeth are worn so that two worn parts come together; also if the adjustments of the various parts in the head-motion are not made so that the mechanism will run smoothly a great deal of vibration will be occasioned and the head-motion will run in a jerky manner, which will sometimes cause the vibrator gears to rebound and harness skips to result.

On a Crompton loom, harness skips are sometimes occasioned by the jack-hooks slipping off from either the lifter or depressor. This may be caused by the edge of the depressor becoming worn and rounded, or by the notch, or hook, in the jack-hook becoming worn; occasionally also the spring that forces down the jack-hook so that it will engage with the lifter becomes broken and drops out, in which case the hook often fails to engage with the lifter, and allows the harness to remain down when it should be raised. Sometimes the rivet of the jack-hook will become worn so that the jack-hook will have some play, which will cause it to slip off the lifter or depressor. Occasionally the jack-hook will become gummed up with dried oil and dirt so that it will not fall freely and engage the lifter. It sometimes happens also that stiff links in the pattern chain will cause the chain to ride the chain cylinder, which may result in a harness skip. Crooked bars in the pattern chain or broken risers will cause difficulty from harness skips, as will also various other minor causes, which are usually readily apparent.

When a harness skip occurs, the best way to find the cause of the difficulty is to observe which harness is failing to work properly, and then trace back its connection to the head-motion and see that all parts are properly adjusted and that they are not worn or bent or out of their proper positions. If the connections of the harness in the head-motion appear to be all right, the risers on the pattern chain that control that harness should be examined. If this

Digitized by Google

method is followed, the cause of the harness skip will be quickly observed in almost every case. The greatest difficulty with harness skips is usually found when the cloth that is being woven is very heavy, and the strain on the shedding motion in raising the harnesses very great. Harness skips are particularly liable to occur when the work is heavy and a large number of harnesses are required to be moved on every pick; the difficulty is increased also if the loom is old and worn. It is very infrequent that any difficulty is experienced with harness skips where light fabrics are being woven. Occasionally, when an old loom gives a great deal of trouble with harness skips, it is advisable to take it apart and replace all parts that are worn, tighten all loose parts, and generally overhaul it until it is as nearly in perfect condition as is possible under the circumstances. This will be found in the end to save considerable of the fixer's time, where a loom has been running so long that the shedding mechanism has become loose and shaky.

8. In strapping the harnesses to the jacks of the shedding motion it is advisable to strap them rather tight when the lift on the harness is severe, and somewhat looser when a light cloth is being woven. This is a point in which a considerable amount of judgment must be exercised, and the best results can only be obtained by practical experience. Care should be taken to put the same tension on the straps of each harness, so that all will rise and fall together, with no lost motion in the case of any harness.

It may sometimes be found that on heavy weaves, if the harnesses are not strapped tight, there will be considerable lost motion in the harness straps; when this is the case it will sometimes cause the stirrups to jump down a notch or two on the jacks, which of course will result in giving the harness a wrong position. In cases where heavy work is being constantly run it is advisable to use *locking stirrups;* these are so arranged that the stirrup is locked in its position and thus cannot move from one notch of the harness lever to another.

Digitized by Google

The harnesses usually are well oiled before being placed in the loom, so that as they rise and fall they will not be chafed by rubbing against each other; sometimes when harnesses are very dry, the frames are much worn from this cause.

WHIP ROLL

9. The relation of the height of the **whip roll** to that of the breast beam of the loom is of importance in governing the shedding of the loom and the appearance of the cloth. Generally speaking, the position of the whip roll should be such that a straight line drawn from it to the breast beam will pass through the center of the shed. In this case the line of the warp will be exactly level when the harnesses through which it is drawn are in a central position. In some cases, however, it is of advantage to alter the position of the whip roll so that the warp line will pass through either the upper or lower part of the shed. For example, suppose that a light fabric is being woven with a simple weave and that it is desired to have a well-covered surface on the face of the goods. In this case the whip roll can be raised slightly, which will result in the tension of the warp yarn in the upper shed being slacker than that in the lower shed, so that the warp yarn will spread and give a well-covered surface to the fabric; whereas, if the tension of the warp in the upper shed is the same or greater than that in the bottom shed, the cloth will have a tendency to appear bare and wiry. On other occasions it might be advisable to lower the whip roll; for instance, in some cases where a very fibrous warp is used and the bulk of the warp remains on the lower shed on almost every pick, it will be found that there is some difficulty in getting a clear shed. In order to remedy this the whip roll may be lowered slightly, which will result in the warp yarn in the upper shed being tighter than that in the lower shed so that it will rise well and form a clear shed.

Digitized by Google

CHAIN STUFF

10. The **pattern-chain** and **box-chain stuff**, including the risers, washers, spindles, links, and cotters, should be kept in a place reserved for it, and care should be taken to see that it is not injured, especially that the spindles do not become bent. The pattern and box chains of a loom should be well oiled, since if not, there is danger of their bunching up on the chain cylinder under the vibrators and causing a serious smash in the head-motion. In order to prevent this, the gear on the chain-cylinder shaft is usually fastened with a soft setscrew, so that if the chain becomes jammed the setscrew will shear off and prevent more serious damage. A few of these setscrews should be kept on hand, so that if one is spoiled and is too short to use again, it may be replaced by a new one. Under no conditions should it be replaced by an ordinary setscrew, because if this is done and the chain becomes jammed again, it will usually result in all the teeth being stripped from the small pinion gear that drives the gear on the chain-cylinder shaft in addition to putting a strain on the loom that may result in other parts being broken or damaged.

BOX MOTION

11. The **box motions** of fancy woolen and worsted looms, like the shedding motions, seldom give very serious trouble when once properly set and adjusted, if their various parts are not worn or otherwise defective. They must be properly timed, so that the boxes will be completely moved before the loom starts to pick, and so that they will not start to move until the shuttle is well boxed. Each box, when it is called, should be brought in perfect line with the race plate, and in order to determine if the boxes are thus adjusted a straightedge should be placed on the race plate so as to extend into the box. By this means any difference in the height of the box and the race plate may readily be detected. The boxes themselves should usually be perfectly level,

Digitized by Google

although some fixers prefer to have the back end of the box a trifle, say $\frac{1}{8}$ inch, higher than the front. If they are not level, they may be made so by bending the lifting, or box, rod. When doing this, care should be taken to bend the rod as near the boxes as possible, and not at a lower point. A very slight bend will be found to be sufficient, and this method is preferable to that of adjusting the guides, since, if the adjustment of the guides is changed, the boxes are very liable to bind when dropping.

BOX JUMPING

12. One difficulty that is sometimes met with in connection with the box motion is known as **box jumping,** though it does not occur very often on modern looms. By jumping it is meant that the boxes have an irregular movement and do not rise and fall smoothly. The box may start to move slowly and then finish its movement with a jump, or it may start with a jump but finish its movement so slowly as barely to come in line with the race plate in proper time. This defect is usually caused by some lost motion in the connection of the boxes with the box motion; it is sometimes caused by an improper adjustment of the box segment cylinders. Sometimes, also, a lay that is loose and shaky will cause the boxes to move with a jumping movement. It occasionally happens that when a large number of harnesses are run on heavy work, the head-motion will run with a jerky motion; this sometimes causes the boxes to move irregularly, especially in their downward movement.

SHUTTLE SMASHES

13. Sometimes the shuttle will not be clear of the picker, or will project from the box enough to catch on the lay, when the boxes are dropping; this may cause the boxes to jump, but more frequently will cause a **shuttle smash.** When a shuttle prevents the boxes dropping, if the next shuttle is driven from the other side of the loom it will not find an empty box, but will be stopped by the shuttle that is caught,

Digitized by Google

with the result that when the lay beats up it will cause the shuttle to break out the warp. Other causes of shuttle smashes are mistakes in the box chain, broken risers in the box chain, shuttles placed in the wrong boxes by the weaver, and imperfect working of the box vibrators and cylinders.

PICKING MOTION

14. Probably no part of a power loom gives more difficulty than the **picking motion,** nor is any motion of the loom so hard to keep in good running order. It is impossible to get the best results if the pick is harsh and jerky, while on the other hand, a loom that picks easily will require far less fixing than one that does not. To procure a smooth, even pick necessitates delicate and accurate adjustment of the various parts of the picking motion, and so many different parts must be properly regulated that the fixer will often overlook the one vital point. A very great strain and also considerable wear is brought on the loom on account of the picking movement; the shuttles, picker sticks, straps, picking balls, shoes, and all other parts connected with this motion are either constantly wearing out or breaking, and if the best of care is not taken the cost of these supplies will soon become excessive. Much of this wear and strain is caused by the harshness of the pick, consequently the easier and smoother the picking motion can be made to run, the better it will be for the loom; but even when all that is possible has been done, there will still be considerable wear and tear that it is impossible to overcome, owing to the imperfection of the principle of picking.

The picker stick in delivering the shuttle, besides supplying force enough to send the shuttle across the loom, must also overcome the resistance of the binder pressing against the side of the shuttle. As soon as the shuttle leaves the box, however, this additional strain is removed, and consequently power that has been exerted in pushing the shuttle from the box will now be free to act on other parts of the loom, so that the speed of the loom will have a tendency to

Digitized by Google

suddenly increase, on the same principle that a body, having a force acting on it while restrained by friction, will move rapidly in the direction of the force applied if that friction is suddenly removed. This is sometimes known as the *reaction of a loom*, and it can be easily seen that the more of a drag there is to a pick, the greater will be this reaction, and consequently the greater will be the wear and tear not only on the parts of the loom in direct connection with the picking motion, but also on all parts of the loom. This reaction is, of course, more noticeable on light than on heavy looms, because a heavy loom tends, by its momentum, to run more uniformly.

15. The first requirement of the picking motion may be said to be the sending of the shuttle through the shed in a very short period of time; the second is to give the shuttle sufficient power to enter the box. Thus, regulating the power of the pick and the tension of the binders on the shuttle are important features in governing the running of the loom. The tighter the box, the stronger must be the pick; and the stronger the pick, the tighter must be the box. It will be seen, therefore, that these two settings react on each other, and in regulating the power of the pick it should be the aim of every fixer to give it just sufficient power to accomplish its work and no more; the tension of the box can then be regulated to correspond to the power of the pick.

In setting the picking motion so as to obtain a smooth and easy-running pick, particular attention should be paid to the adjustment of the picking shoes. These should be so set that their curve will conform with, or be tangent to, the circle described by the picking ball in revolving around the bottom shaft. If the blow of the picking ball is too sudden, and if when the ball first strikes the picking shoe it knocks the latter down too rapidly, the pick will be harsh and a smooth motion will be difficult to obtain. Almost every fixer has some special rule for setting the picking shoes, but generally a plumb-line is dropped over the bottom shaft and the picking shoe moved

Digitized by Google

up on the picking shaft until its point just touches this plumb-line. On equally geared looms, where a longer picking shoe is used, it is generally customary to allow the point of the picking shoe to project about 1 inch beyond this plumb-line. After fastening the shoes, the loom should be turned so that the crank-shaft is on its top center, and each pick ball should be adjusted so that it just starts to move the shoe and the picker stick. On equally geared looms both pick balls should be set so that they start to move the picker stick at exactly the same time. On unequally geared looms, where there are two pairs of pick balls to adjust, each pair must be made to pick together and at the proper time. Great care should be taken in setting these parts also to see that the picking, or shoe, shaft is not bent, since this will be apt to make a harsh pick. The shoe shaft should be set level, at least when starting to set the picking motion, although in some cases it may be desirable to raise or lower either end in order to slightly alter the strength of the pick.

In adjusting the picking motion, the most important point to bear in mind is to have as little power as is actually necessary to drive the shuttle across the loom; if this is done the binders will not be required to press so hard against the shuttle in order to hold it in the box and prevent rebounding. Raising the back end of the picking, or shoe, shaft tends to make the pick stronger during the latter part of the movement of the picker stick, while raising the front end of the picking shaft tends to make the pick stronger and quicker during the first part of the movement of the picker stick. Lowering the front end has about the same effect as raising the back end, and lowering the back end has a similar effect to raising the front end, although in both these cases the shoe is drawn away from the picker ball slightly and the power of the pick as a whole is decreased, whereas raising either end of the picking shaft tends to bring the shoe nearer the picking ball and consequently to generally increase the power of the pick. Sliding the picking shoe forwards increases the power of the pick, and moving it backwards softens the blow of the picker on the shuttle.

Digitized by Google

ADJUSTING THE LUG STRAP

16. Around the **lug strap** that connects the sweep, or picking, arm with the picker stick is usually placed a small leather strap, which is fastened to the picker stick by means of a screw. This strap serves to hold the lug strap in position, and by adjusting its height on the picker stick more or less power is given to the pick, since if the lug strap is raised on the picker stick the power of the pick is decreased, and if it is lowered the shuttle will be driven with greater force across the loom. The normal position of the lug strap should be such that it is level, but of course in some instances it is desirable to raise it a little to decrease the pick or lower it a little to increase the pick. If possible, however, the lug strap should never be connected to the picker stick on a lower level than to the sweep stick, since when this is the case it has a tendency to slide up on the picker stick as the loom picks. This is due to the force coming from above the point where it is connected and is very liable to result in a weak pick, the shuttle not receiving sufficient power to reach the opposite box. In placing lug straps on a loom, care should be taken that they have a little play. Under no condition should they be tight when the picker stick is at rest at the outer end of the box.

When the picker stick is brought back to its extreme position against the back end of the box, it should rest against a roll of cloth placed in the back of its slide. At the other end of the box a strap is threaded on the picker spindle to serve as a bunter and prevent the damage to the picker and picker stick that would occur at this end of their movement, if the iron end of the box were not protected. The length of the movement of the picker stick, or its *sweep*, may be regulated by the picking arm on the picking shaft. The sweep should be so adjusted that the picker will be moved to a point about 2 inches from the bunter. If the sweep is too long, the picker stick will be broken when the loom picks.

Digitized by Google

SETTING BINDERS

17. The shuttle is sent with such force from one side of the loom to the other that some arrangement must be provided by means of which it can be gradually checked instead of being brought to an abrupt stop, since if this is not done, not only will the picker and picker stick wear out much more quickly, but what is still more objectionable, the shuttle in striking the picker will rebound. If the shuttle rebounds, the picker, when brought forwards to drive it across the loom again, will have to move a considerable distance before coming in contact with the shuttle, and as a result the force of the blow will be greatly lessened and the shuttle will probably not reach the opposite box in time to prevent the shed closing on it. The **binder** is the movable side of the box that presses against the shuttle so as to produce this retardation.

Many methods of adjusting binders have been adopted, the one aim in all cases being to set the binder in such a manner that the shuttle on entering the box will receive a uniform and gradual check. In order to obtain this result the shuttle should commence to press against the binder only when its widest part comes in contact with that part of the binder that projects into the box. It should then steadily press out the binder until that part of the shuttle that first came in contact with the binder has reached the other end of the part of the binder that projects into the box. When set in this manner the binder will present its full face to the side of the shuttle when the shuttle is at rest in the box. If the binder is set too loose, the shuttle is liable to rebound; and if set too tight, additional power will be required of the picking motion to drive the shuttle into the box. The pressure of the binder on the shuttle must be regulated to correspond to the power of the pick, and if the power of the pick is properly regulated so that it is just sufficient to properly drive the shuttle across the loom, a very light tension on the binder will be sufficient to hold the shuttle in the box.

Digitized by Google

Sometimes when the shuttle rebounds, the tension of the binder may be increased by bending the binder spring, while at other times more spring on the protector motion will remedy the defect if it occurs in several boxes. The binder should be bent should it fail to hold the shuttle because the full face of the binder does not touch it. When doing this, the binder should be taken out and the parts that are worn bright located; then strike the binder with a hammer on the opposite side at a point midway between the bright spots, or in other words, at a point opposite to where the binder fails to touch the shuttle.

SHUTTLES

18. In picking out a set of **shuttles** for a loom, care should be taken to secure those that are the same size and weight; therefore, each shuttle should be tested by running a pair of calipers along its length; it should be also noted if both ends of the shuttle are of the same width. The shuttles should be weighed accurately, in order to ascertain that their weights are exactly alike.

After the shuttles have been run for some time they will become worn, and consequently their size and weight will not remain exactly the same; then it will often be found that certain shuttles will not be checked well, or perhaps this may occur only in certain boxes, while in other boxes they may be found to work correctly. To overcome this it is necessary to true the shuttles. To do this some fixers use a plane, but many rub the shuttles on a strip of coarse sandpaper, which may be tacked to the bench. Either method will answer the purpose, but care should be taken to keep all the shuttles the same size and weight. Considerable trouble results from the liability of the shuttles to accumulate dirt on the sides, which causes them to stick as they enter or leave the box; consequently, they should always be kept clean. Shuttles often become chafed owing to rough places at the mouth of the box, which is often aggravated by the shuttle being thrown slightly crooked; the cause of the chafing should be

Digitized by Google

removed and the shuttle smoothed with sandpaper. Frequently the points of a shuttle become broken, either through striking another shuttle or some other cause. In this case the point of the shuttle should be ground down. Shuttles should always be kept smooth and all bruised spots eliminated with sandpaper. The fixer should always see that the shuttle pin does not project from the shuttle and also that any screws used to hold the shuttle spring in position are securely tightened. A brush of yarn or a piece of flannel or felt should be inserted in the shuttles, so as to cause sufficient tension on the filling.

FILLING STOP-MOTION

19. The **filling stop-motion**, while its parts are very sensitive and delicate, is not frequently the cause of any great amount of difficulty. Sometimes the fork is not raised high enough to clear the shuttle, so that when the shuttle is driven across the loom it will strike the prongs and bend them. Occasionally also the groove in the lay is not deep enough, or it may become filled with lint, dirt, and other accumulations, so that the fork will not drop freely into it, and consequently when the filling breaks the loom will not stop. The remedy for this is obvious.

The filling stop-motion should be kept well oiled, and care should be taken to see that its parts are properly adjusted and work freely and that none of them are loose. Sometimes the filling stop-motion will fail to stop the loom when the filling breaks, on account of the dagger rebounding and failing to engage the knock-off finger. The end of the dagger or the notch in the knock-off finger becomes worn sometimes so that the dagger will slip out of the notch even if it engages properly in the first instance. On the Crompton filling stop-motion the loom may fail to stop because the slide that lifts the fork is not properly set, the fork failing to fall quickly enough.

Sometimes difficulty is occasioned with the filling stop-motion marking the cloth; this is especially noticeable when the fabrics are of light weight or of a light color. When this is the case, the fork should be so set as not to interfere with

Digitized by Google

the cloth in any way, and it should be noticed if the prongs of the fork are perfectly straight. Sometimes with fine filling the weight of the fork will press the filling into the groove in the lay so far as to make a little slack, which will then kink the filling at that point.

TAKE-UP MOTION

20. The **take-up motion** rarely gives any trouble, but sometimes it will be found that the throw of the take-up pawl is not properly adjusted, and the loom will therefore occasionally take up two teeth instead of one. When this is the case the pawl should be adjusted so that the ratchet gear will be moved only one tooth at each pick of the loom. Care should be taken also to have the tension of the cloth between the cloth roll and the take-up roll somewhat less than between the take-up roll and the breast beam, since although there is but little backlash in the gears, it is sometimes found on light fabrics that the backlash will be sufficient to cause the cloth to be slightly uneven. All the gears of the take-up motion should mesh perfectly with each other, neither too hard nor too light, in order to obtain even cloth. Care should be taken also that all gears are fastened securely when necessary. Take-up rolls that are covered with sandpaper sometimes become so smooth that they fail to grip the cloth securely, especially in the case of heavy fabrics woven with considerable tension. When in this condition they should be recovered; they can be made to run a little while longer, however, by changing them into a loom of the other hand so that their direction of rotation will be reversed.

LET-OFF MOTION

21. In regulating the **let-off motion** care should be taken to have the warp tight enough so that there will not be any great amount of slack cloth on the breast beam when the lay beats up. When watching a loom run it will sometimes be noted that as the lay strikes the fell of the cloth it

Digitized by Google

causes considerable slack in the cloth when the reed comes in contact with it. To remedy this it is advisable in most cases to add some weight to the let-off motion.

Trouble with the let-off motion is usually confined to light-weight fabrics and is generally shown by uneven cloth, which is caused by the friction sticking fast and then letting off all at once. This trouble is greatly aggravated by damp weather or by a damp weave room. When the let-off motion will not work smoothly, the friction strap should be taken off and the leather with which it is faced thoroughly cleaned. A new strip of cloth should then be placed around the beam head and a little black lead rubbed upon it to prevent sticking.

GENERAL LOOM FIXING

BANGING OFF

22. One of the most frequent difficulties that a fixer has to contend with, and one that is probably due to as many different causes as any other, is known as **banging off,** or sometimes as **slamming.** A loom is said to bang off or slam when for any cause it is stopped by the dagger of the protector motion. This takes place every time the shuttle fails to reach the opposite box, either on account of its meeting with some obstruction or on account of its not receiving sufficient force from the picker stick. It will be seen that when this takes place a very great strain is brought on the various parts of the loom, since the momentum of the loom is checked so suddenly that the shock must necessarily be very severe. This being the case, various parts of the loom are liable to be broken if the loom bangs off frequently, and while in some cases these breaks may be readily fixed, as a general rule a break resulting from the shock of banging off will cause the loom to be stopped for considerable time for repairs. It sometimes happens that the shock is so great that the teeth of the gears on the crank-shaft

Digitized by Google

and bottom shaft will be broken, owing to the tendency of the gears to revolve after the loom is stopped. The liability of this happening may be greatly lessened by having the teeth on these gears sufficiently meshed into each other; because if the teeth merely touch each other at their points, the concussion due to the sudden stopping of the loom will be much more liable to cause breakage than if the teeth are properly geared. In other cases it sometimes happens that one or both of the lay swords will be broken, since the movement of the lay is instantly checked when the loom bangs off and its weight and momentum will be sufficient to break the swords. The crank-shaft is sometimes broken, as is also the side frame of the loom, the protector casting beneath the breast beam, and various other parts.

23. A great variety of causes tend to make a loom bang off, and when seeking to remedy this difficulty it is first desirable to see if the loom is picking properly. Turn the loom over and see if it picks on time. It may be found that the shoe on the picking shaft is loose or badly worn or that the picking ball is loose. Sometimes the stud that supports the picking ball or the hole in the picking ball will be badly worn; sometimes, also, the picking ball will be worn flat in places. Such things as these result in a weak pick, and the shuttle when it is driven across the loom fails to reach the opposite box in time to prevent the protector motion from operating. Sometimes banging off is caused by the shuttles being covered with a gummy grease, which prevents their entering the box freely. Sometimes also the binder will be too tight or too loose, which will cause the shuttle to rebound and then on the next pick a sufficient impulse will not be given to the shuttle to cause it to reach the opposite box. The picker stick may bind, which will also occasion a weak pick, or the picker spindle may be bent. The loom may be caused to bang off by any loose parts on the protector motion, as, for instance, sometimes the protector finger will become loose; also it will be frequently found that the hole in the binder will become enlarged, or the spindle that

Digitized by Google

supports the binder may become bent so that the binder will fail to impart a sufficient movement to the protector finger to cause the dagger to clear the casting beneath the lay.

Banging off is also sometimes occasioned by a loose belt, or by the friction slipping, or by the belt itself slipping. In these cases it will be found that the slip will occur just as the loom starts to pick, which will result in a weak impulse being imparted to the shuttle. The friction when slipping is often difficult to remedy, although in some cases it can be fixed by simply moving it up closer. Sometimes the trouble is due to the countershaft having too much play, in which case the wooden block that holds its end in position should be adjusted or a new block inserted. The cause of the friction slipping is generally due, however, to the leather with which it is faced becoming greasy; this can be remedied by rubbing it with slaked lime or whiting. Sandpapering the leather, as a rule, is of little value.

The bearings of the picking shaft may have become loose, which will also result in banging off. Sometimes the shuttle will be retarded by the shed not opening wide enough or early enough to give the shuttle a clear path across the loom, or it may close upon the shuttle so soon as to prevent its entering the box freely.

SHUTTLES GOING CROOKED AND FLYING OUT

24. If the speed at which the shuttle travels across the loom is kept in mind, it will not be difficult to understand that any obstruction to its flight, however slight, will serve to throw it out of its course and very probably out of the loom. When this happens, the loom will of course bang off, but the shuttle is also liable to break out the warp threads and injure the weaver, if it flies out of the loom. When looking for the cause of this defect, the shedding of the loom should be carefully considered. It is very important that the bottom shed should not be so high that it will give the point of the shuttle an upward tendency as it is delivered from the box. Also it is important to notice the timing of

Digitized by Google

the harnesses; they should change in time to offer a free shed to the shuttle as it starts on the passage across the loom. Very often a broken end of the warp will become entangled with other warp ends, preventing their opening the shed freely and thus causing an obstruction to the passage of the shuttle. When this is the case, it is easily noticed and quickly remedied. The position of the reed should also be carefully noted, and it should be seen that it is perfectly in line with the back of the boxes; for if it should be set a little forwards of this position, it is sure to give the shuttle an outward tendency, causing it to fly from the loom or at least to cross the loom with a crooked flight. One or more dents of the reed protruding into the course of the shuttle will have a similar effect.

The position of the boxes in regard to the race plate should be noted; each box should be brought exactly level with the race plate when the loom starts to pick. The point where the shuttle leaves the boxes should also be carefully noticed, as any obstruction here, however slight, is liable to result in the shuttle being deflected. Occasionally a screw in the race plate will become loose and the shuttle striking this is sure to be thrown out. Sometimes also the race plate will be raised a little in places, which will also result in the shuttle being deflected. The shuttles themselves are liable to become worn so that they do not rest flat but have a rocker-shaped bottom, in which case they are almost sure to give trouble, either from going crooked or flying out. A worn picker will also cause the shuttle to fly from the loom, and occasionally a broken picker stick or strap will have the same effect. It will sometimes be noticed that the shuttle in entering the box will stop with its outer end projecting a slight distance, in which case when the boxes are dropped it will rest on the race plate and, as the loom picks, will sometimes fly out, but usually in this case the shuttle will be held fast and the picker stick broken. Sometimes the picker spindle may be loose or bent, which will cause the shuttle to be deflected as it is thrown, or the picker spindle may not be fastened exactly parallel to the box. Occasionally

Digitized by Google

the lay will be out of true, or the pitman arms may be loosely connected or worn. This makes the lay shaky, which in combination with a harsh and jerky pick will often result in the shuttle being thrown from the loom.

PICKER STICKS BREAKING

25. Owing to the nature of the work performed by a picker stick, broken ones are not of infrequent occurrence. Picker sticks should be made from straight-grained hardwood, the best ones being made of hickory, straight- and fine-grained. A coarse-grained stick, even if made of harder wood than a fine-grained one, will generally be found to be weaker. When the picker stick breaks, it will usually be found to be split through the hole at the heel. This is often caused by too long a sweep or by a shuttle becoming caught in the boxes. Sometimes also the picker will become caught in the boxes and when the loom starts to pick the picker stick will be broken. There are a great many other causes that tend to break the picker sticks, but the cause can usually be ascertained in any particular case. Occasionally the picking arm, which is connected by means of the lug strap with the picker stick, will be broken. This is usually due to similar causes to those that break picker sticks. It is also occasionally due to the loom running too rigidly.

CUTTING FILLING

26. Sometimes a loom will develop an aggravated case of cutting filling, in which event it will constantly be stopped by the filling stop-motion, owing to the pick being cut or broken in some manner. In the great majority of cases the filling is cut when the shuttle is entering or leaving the box in which the end of the shuttle containing the eye is in contact with the picker. Sometimes when the shuttle is thrown from this box that part of the filling that extends from the eye of the shuttle to the selvage is doubled on itself; in this case if the filling is rubbed by the shuttle against the binder

Digitized by Google

or any projection or rough place, it is almost sure to be cut. When seeking to remedy a case of filling cutting, the broken pick should be extended until it is found just how far it reaches. Sometimes it will reach just to the mouth of the boxes, in which case that is the place to look for the cause of its cutting. Frequently it will reach to the temple, in which case it may have been cut by the temple striking the reed or rubbing on the race plate. The sides of the boxes and the binders should be carefully examined to see if there are any projections or rough places that will interfere with the filling. Sometimes when the loom is throwing a crooked shuttle, the shuttle will enter the box in such a manner as to pinch the filling between itself and the side of the box and cut it. Occasionally the pin that holds the spindle in the shuttle may become loose and project a short distance from the side of the shuttle, in which case the shuttle is almost sure to cut the filling. Occasionally splinters on the shuttle will catch the filling and break it, or the pot eye in the shuttle may be cracked so as to catch the filling and break it, especially in the case of fine filling.

Sometimes when the shuttle is checked in the box, the shuttle spindle will be thrown up sharply, which will result in the filling being snapped if it happens to be tender. If it is noticed that the filling is being cut in a certain box, it will generally be found that the cause is with that box and in many cases it will be the binder that is causing the difficulty. Occasionally considerable filing is needed on the mouths of the boxes to prevent the filling being cut, and at all times it is advisable to keep the shuttles perfectly smooth and have them thrown across the loom straight.

FILLING KINKING

27. Kinks in the filling are usually the result of too much twist in the yarn, or a yarn of a wiry nature. When such is the case the filling should be thoroughly dampened before weaving, either by being steamed or by having water sprinkled on it.

Digitized by Google

Another point to be noted is the friction that is placed on the filling in the shuttle. If the filling is allowed to run out of the shuttle too freely, more than the required length for 1 pick is very liable to be given off, and when beaten up by the reed it will be sure to form ridges. In order to prevent this, a small piece of flannel or a small brush should be placed in the nose of the shuttle in such a position that the filling running through the eye will come in contact with it, thus causing a drag on the filling yarn as it is leaving the shuttle. When fine yarns are being used, however, care should be taken not to produce so much friction that the filling will be frequently broken as the shuttle crosses the loom.

Another cause of kinky filling is the shuttle rebounding in the boxes sufficiently to cause slack filling, but not enough to result in the loom banging off. Occasionally filling kinking may be remedied by setting the shedding mechanism so that the shed will be closed early; in this way the shed will close on the pick of filling before it has time to kink in the cloth.

KNOCKING OFF FILLING

28. It frequently happens that when the shuttle is checked in the box the momentum will be sufficient to cause the yarn to slip off or, as it is sometimes spoken of, *knock off*, or *slub off*, the bobbin in lumps. This produces a great amount of waste besides causing the filling to break and the loom to stop and also, in some cases, double picks to be inserted in the cloth. The cause of filling knocking off is fully as often found in the spinning department as in the weaving. Very frequently the yarn will be wound on the bobbin in such a manner as to be so soft or have such a taper that it is almost impossible to throw the shuttle across the loom without the filling slubbing off when it is checked. In most cases when the filling is being knocked off, the principal point is to regulate the power of the pick, reducing it as much as possible. It is also necessary to see that the shuttle is as gradually and uniformly checked as possible. If the shuttle is being sent

Digitized by Google

across the loom at a high speed and is then suddenly stopped and the bobbins are in any way soft, the filling is almost sure to be knocked off; consequently, anything to lessen this blow will also lessen the liability of this defect.

BOBBIN SPLITTING

29. Bobbin splitting is a defect that is caused by the spindle in the shuttle rising so that as the shuttle enters the box it strikes the top of the box and as a result a piece of the bobbin is split off. This is sometimes caused by the shuttle going across the loom crooked, or sometimes because the bottom shed is too high; sometimes also the box may be too low, and thus the shuttle enters the box too high. Bobbin splitting is also caused by the spindle in the shuttle being loose, which causes it to rise as it is thrown across the loom.

THICK AND THIN PLACES

30. Thick and thin places in the cloth, or *uneven weaving*, may result from the weaver making an imperfect start after a pick-out has been made, or they may occur while the loom is running. In the first case, the difficulty is due to the cloth not being let back the correct distance, or the tension of the warp not being adjusted exactly the same after a pick-out has been made as previously, in which case either a thick or thin place is made when the loom is started. The thick or thin places that occur when the loom is running, however, are an entirely different matter and are not at all times easily overcome. Sometimes a loom will run for many hours, then make a thick or thin place, and then run for an hour or two longer before repeating this defect. Sometimes the friction let-off is the cause of this defect, it being frequently found that the friction will hold the warp tight for several picks and then all at once let off a considerable amount. In damp weather, the let-off motion will sometimes get in such a condition that it must be cleaned of all foreign substances and

Digitized by Google

rubbed with black lead. Occasionally it will be found that the beam is not true, or sometimes the casting that supports one of the journals of the beams may be loose. Sometimes thick and thin places are caused by the take-up motion. This defect is more noticeable when weaving light goods, in which case particular care should be taken with the let-off and take-up motions. Sometimes the weights on the levers governing the let-off motion may be striking on the floor, on the frame of the loom, or on one of the warp beams, in which case the warp is apt to let off unevenly. Sometimes the flange of the beam may rub on the floor or on some part of the loom and thus cause thick and thin places.

SHADED GOODS

31. The defect known as **shaded goods** is sometimes caused in piece-dyed goods by the heddles not being evenly divided by the hook supporting the heddle bar in the center of the harnesses; that is, the heddles will be crowded on one side of the loom. This often results in the goods having a darker shade on one side after being dyed. The remedy for this is of course obvious. Shaded piece-dyed goods are not always the fault of the loom or the fixer, since they are frequently caused in dressing the warp by unequal tension on certain sections and by other causes.

REED MARKS

32. **Reed marks** are stripes lengthwise of the cloth caused by some of the splits of the reed becoming bent, usually through carelessness in handling the reed. Reeds are easily bruised, and when a reed is thus damaged it is impossible to weave perfect cloth from it until the damaged splits are straightened. This may be easily accomplished by means of a pair of reed pliers or by drawing out the damaged splits and inserting new ones in their places.

Digitized by Google

CHAFING AND BUTTONING BEHIND THE REED

33. It will be understood that the constant chafing of the yarn in passing through the heddles on the harnesses tends to wear and weaken the yarn and to break it, while the reed in working forwards and backwards in beating up the filling chafes the yarn even more than the harnesses. Very often on fibrous warps the reed will scrape the loose fibers from each thread and collect them in buttons just behind the reed and in front of the harnesses. When these buttons grow large, through the constant accumulation of loose fibers, and the warp is drawn forwards by the take-up motion, the yarn will not be able to pass through the reed and so will be broken out. This may be prevented by properly sizing the warp; but if a warp is already in the loom it can be helped by making a loose rope of waste yarn and attaching it to the lay just behind the reed so that it will rest lightly on the warp. Then as the lay moves forwards and backwards the projecting fibers on the yarn will be smoothed down and the yarn passed through the reed all right. In case the difficulty is very great, this rope of waste may be kept moistened, either with water or a thin size.

POOR SELVAGES

34. With some warps it is often found difficult to produce clean and even selvages, especially when single yarns are used for selvage ends. When ragged selvages are being made the defect is usually due to the selvage ends being broken out in weaving. This is often caused by the temples failing to hold the cloth out as wide as necessary, so that as the reed beats up the pick of filling, the selvage ends are broken out. When this occurs repeatedly, the weaver will fail to keep the selvage ends tied in, with the result that poor selvages are made. Occasionally when the shed is being opened a little late the shuttle will start to cross the loom before the shed is open sufficiently to prevent the selvage ends being broken by the shuttle. Late shedding

Digitized by Google

is especially liable to cause the selvage ends to be broken if the shuttle is a little rough.

When loose weaves, like baskets and sateens, are being woven, it is often impossible to produce a good selvage by drawing the selvage ends through the regular warp harnesses, because the latter do not rise and fall frequently enough to produce a firm edge on the cloth or to hold the picks of filling out well. When this is the case, a selvage motion should be used to operate the selvage ends; it will often be found impossible, however, to use a motion that changes the selvage on every pick and produces a plain selvage, because the selvage ends will in this case take up so much faster than the warp that they will become so tight as to break. In this case a selvage motion arranged to change the selvage ends first on one side of the loom and then on the other, so as to put 2 picks of filling in each selvage shed, may often be used to advantage, since in this case the take-up of the selvage ends in weaving is not so great.

Sometimes the selvage ends instead of being too tight will be slack, in which case if there is much tension on the filling the selvage ends will not hold out the cloth to the full width. Sometimes it is difficult to so set the temples as to hold out the cloth. In either of the above cases it is sometimes of advantage to wind a strip of coarse sandpaper about 4 inches wide around each edge of the take-up roll, so that its diameter will be slightly increased, which will result in the edges of the cloth being drawn down a little faster than the body of the cloth and the selvages thus kept tight. This method will sometimes be found to aid greatly in holding out the cloth to the full width when heavy fabrics with a hard weave are being woven.

Occasionally a temple will damage the selvage or the edge of the cloth. This is sometimes caused on delicate fabrics by the burr of the temple being damaged, and sometimes one or more of the rings of the burr will be bent so that they fail to turn. Sometimes the cap of the temple will rub the cloth so as to damage it, and at other times

Digitized by Google

the cloth may be too far into the temple. It is sometimes found that on light and delicate fabrics the end ring of the temple will mark the cloth, because the greatest strain in holding out the cloth to its full width is at this point. In such cases it is necessary to remove this ring from the temple, and in exceptional cases it may be necessary to take out two or more rings.

WEAK WARPS

35. Occasionally there is sent to the weave room a warp that is composed of such tender and twitty yarn or that is so slack-twisted that it is almost impossible to weave, on account of the warp breaking out so frequently. Warps of this character require a great deal of skill in handling, even if normal results only are expected. The worst feature of these warps is that very little can be done to positively remedy them, and about the best that the fixer can generally do is to adjust the loom so that it will run as smoothly and easily as possible. The tension of the warp in weaving should be made as slight as is consistent with forming a clear shed. The shed also should be made to open just enough to nicely clear the shuttle; if it opens too wide the warp is strained by the harnesses, while if it does not open wide enough it is chafed by the shuttle.

The shed should not be made to open too early, but should rather be set a little late. It is also of advantage sometimes to set the top cylinder gear a little ahead of the bottom cylinder gear, so that the harnesses that are rising will reach their destination just before the reed strikes the fell of the cloth, while those that are falling will come to rest just after beating up. By doing this the strain on the warp is lessened somewhat, because these three actions all produce a strain on the warp yarn, and if they do not all occur at one and the same time, this strain will not be so liable to cause breaks. When weak warps are to be woven, it is very important to have the whip roll in such a position that there will be an equal strain on both the top and bottom sheds.

Digitized by Google

MINOR MATTERS OF IMPORTANCE

OILING

36. Looms should be oiled twice a day; in most mills the **oiling** is performed every morning and noon. The weavers are supposed to keep their looms well oiled, but as a loom that is not properly oiled requires a great deal more fixing, and as the fixing falls on the loom fixer, it behooves him to see that the weavers are not negligent in this matter. The fixer should notice if the weaver is oiling the loom at all the places where oiling is necessary, and if not he should point out to the weaver the parts that require oiling. Whenever a warp is woven out and the beam and harnesses taken from the loom, the weaver should take the opportunity to oil those parts of the loom that are difficult of access. The fixer should occasionally grease the gearing of the loom, especially the heavy driving gears. An excellent grease for this purpose may be made by filling a suitable receptacle about half full of soft soap and stirring powdered black lead, or graphite, into it. Good heavy oil may be used instead of the soft soap, but the latter is cheaper and serves the purpose as well—which is merely to hold the black lead, or form a body for it.

CLEANING

37. The weavers are also required to keep the looms clean, since if large amounts of dirt and flyings are allowed to accumulate, the warps and cloth are liable to be soiled and the danger of fire is also greatly increased. Looms should not be cleaned while in motion, though in some states where the law allows, this is done. To clean the looms a short-handled brush should be used; a bristle brush is the best, but a good brush, or swab, may be made by tying a bunch of waste yarn on the end of a short stick. The weavers should not be allowed to wipe or clean their looms with a rag or a bunch of cotton waste held in the hand while

Digitized by Google

the machine is running, as this is a very dangerous practice and is sure to result in an accident. The weavers should give the loom a thorough cleaning every time the warp is out of the loom, and if they are required to keep the floor clear of waste, the general appearance of the weave room will be greatly improved. A scrubber should be employed to scrub the floors and wash the windows. The latter especially should be kept clean and bright, as good light enables good cloth to be woven, because the weaver can then readily note any imperfections that are being made in the cloth.

BLACK OIL

38. White and delicately colored fabrics are sometimes stained with black and dirty oil. Although this rarely happens, it may be prevented by proper care in wiping off surplus oil from the various parts of the loom where it is liable to come in contact with the warp, filling, or cloth, and by having the hangers of the driving shafts so located that they are not directly above the loom. Large stains may be removed with a solution of oxalic acid, afterwards thoroughly washing the place where the spot was.

SUPPLIES

39. In order to do good work, a loom fixer requires supplies of the very best quality and of as extensive an assortment as may be necessary for the class of looms under his charge. He should, however, exercise the greatest care and economy in their use, as this is an item of considerable expense to the mill and a point that is generally carefully watched by the management. If a loom is breaking picker sticks frequently, the cause, which may be nothing more than too much sweep on the stick, should be ascertained and the difficulty remedied; the entire stock of spare sticks should never be used. A number of pickers may be strung on a wire and kept in the oil tank, so that when a new picker is required, one of these may be used; it will last much longer. Other supplies should also be made to last as long

Digitized by Google

as possible. The practice of doing without supplies by patching up a makeshift should not be tolerated, however, and when it is necessary to draw on the supplies, the quicker it is done the better it is for the loom and the fixer. A saving in supplies may be effected if the fixer is vigilant in observing and remedying little defects about the loom. For instance, he may notice that a box is a little too high or low and the shuttles are consequently becoming chafed; leveling up the boxes not only saves the shuttles, but very likely saves a case of shuttle flying.

WORKMANSHIP

40. The fixer should endeavor to do everything in a workmanlike manner, since by so doing he will show himself to be the master of his trade. Many things about a loom may be fixed in a makeshift way and the loom will run just as well, but in order to have an appearance of neatness, a loom should be fixed in the best and most substantial manner possible under the circumstances. For instance, if a harness strap is too long, the fixer should not tie a knot in it to save going to the bench for the belt punch, nor should he make a new hole in the strap with a knife, since in this case the strap will break sooner or later and perhaps cause serious damage. In order to do good work a fixer should have a good set of tools, each stamped with his name or initials. These should include one 14-inch monkeywrench, one 8-inch monkeywrench, a good assortment of flat **S**, or angle, wrenches, at least two good screwdrivers, an awl, a steel straightedge, a pair of strong pliers, a pair of reed pliers, a small spirit level, a machinist's hammer, a ball-peen hammer, a prick punch, a cold chisel, a few files, and a revolving belt punch. To these may be added various other tools that are convenient and useful, such as drills, bits and a bit stock, a chalk line, and a steel tape.

Digitized by Google

Digitized by Google

PLAIN LOOMS

INTRODUCTION

1. Evolution of the Loom.—The name **loom** is generally applied to any machine that produces a woven fabric as distinct from a knitted fabric. Weaving is one of the oldest of the textile arts, and for the production of ordinary fabrics is a comparatively simple process. It was practiced wholly by hand until about the end of the 18th century, when an entire change took place. From the combined efforts of inventors there was then evolved a loom of such construction that almost the whole operation of weaving could be performed by power. In all essential details this machine was constructed on the same principles as the looms that have been in use throughout the 19th century.

During this period countless efforts have been made to improve the loom, and many of these have resulted in changes. Each attempt at betterment, however, has usually been confined to some one motion or part of the loom, effecting improvements merely in the details of construction and operation; until 10 years ago very few great improvements had been made in the plain power loom, and at that time a new plain loom did not differ very much in general appearance and construction from a loom built a generation previous. During the last decade, however, there has been a strong tendency toward improving the plain loom by making it more automatic, and undoubtedly the next 10 years will see still greater changes, and weaving a decade hence will be a very different art from what it was 10 years ago.

For notice of copyright, see page immediately following the title page

Digitized by Google

The English loom differs considerably from the American loom, as in Europe the same attention has not been given to the development of weaving machinery as has been done in America; consequently, in many respects (though not all) the American loom is superior to its English forerunner, especially with regard to labor-saving devices.

The object of the loom is to interlace yarns in such a way as to form a cloth or fabric. Instead of threads, filaments or strips may be used, and the fabric may be of all kinds, from the finest muslin to the heaviest bagging.

2. Principle of Construction.—The principle on which the loom is constructed is that of manipulating two series of yarns—the warp and the filling—so that the warp will be slowly drawn through the loom, the warp threads being separated frequently, and the filling, which is contained in a **shuttle**, thrown through the spaces formed; the warp threads are crossed after each pick of filling is inserted, so as to bind the latter in place.

In order to interlace the yarns, it is customary to prepare them in two forms known, respectively, as *warp* and *filling*. By the **warp** is meant that system of threads which is placed on what is called a **loom beam**, and which consists of a sheet of ends wound repeatedly around a roll and stretched from back to front of the loom.

The name **filling** is applied to a series of threads that run across the fabric and are interlaced with the warp when the warp ends are raised or depressed. In other words, the warp is stretched from back to front of the loom and, when the cloth is woven, forms the threads that run lengthwise, while the filling is passed from side to side of the loom and forms the yarn in the fabric that runs crosswise.

3. Operation of the Loom.—It will be seen that, in order to make cloth, some of the warp threads must be raised and others lowered to produce the space through which the filling can be passed. This space is called a **shed**, and through it the filling is thrown from side to side.

The throwing across of the filling is known as **picking**.

Digitized by Google

The shuttle, in being thrown from one side of the loom to the other, leaves the filling some distance from the edge, or fell, of the cloth. It is therefore necessary to push it forwards to the cloth, that is, to the picks that have previously been put in and that help to form the fabric. This process is known as **beating up** and completes the round of operations necessary to produce cloth.

The common loom, as used today, in addition to performing the operations of shedding, picking, and beating up, has many parts that must perform certain other operations in order to render it automatic. For example, **take-up motions** are applied to draw the interwoven warp and filling forwards after it has become cloth; **let-off motions** are used to release the warp at the desired rate of speed; **automatic stop-motions** are provided to cause the loom to cease operating when the filling breaks, and in some cases when a single end of the warp breaks; **temples** are provided to extend the cloth sidewise; all of these attachments are found on what is called a *plain loom*.

The fact must not be forgotten that, notwithstanding the use of these necessary attachments, the actual operation of weaving is simply a continuous repetition of shedding, picking, and beating up, though these three motions may be obtained in different ways, and auxiliary motions for producing other effects may be added. In order that the elementary principles of weaving shall be thoroughly understood, the essential parts of a plain loom will be pointed out briefly, and afterwards the object and operation of each part will be fully described.

PARTS OF A PLAIN LOOM

4. Fig. 1 is a front view of a **plain loom**, while Fig. 2 gives a view of the back of the same loom. In pointing out the different parts of this loom, the American terms most commonly used will be given. The reference letters used in Figs. 1 and 2 correspond, so that references to one figure apply equally to the other.

Digitized by Google

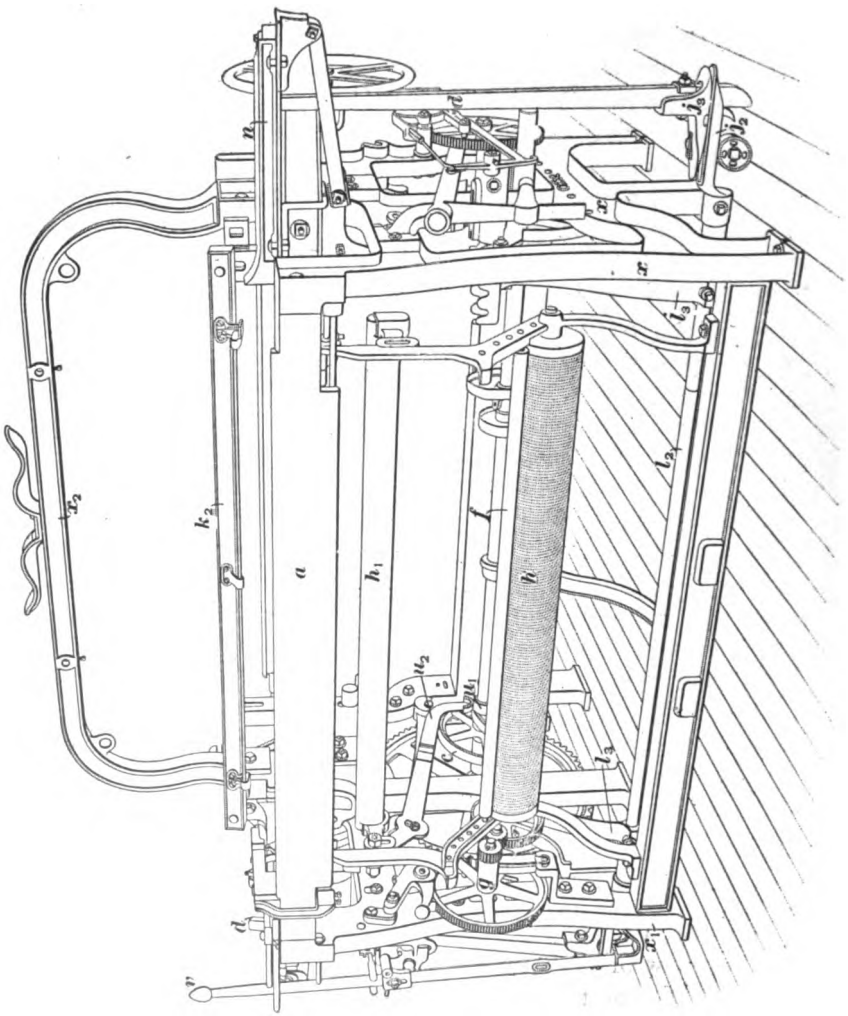

, Fig. 1

Digitized by Google

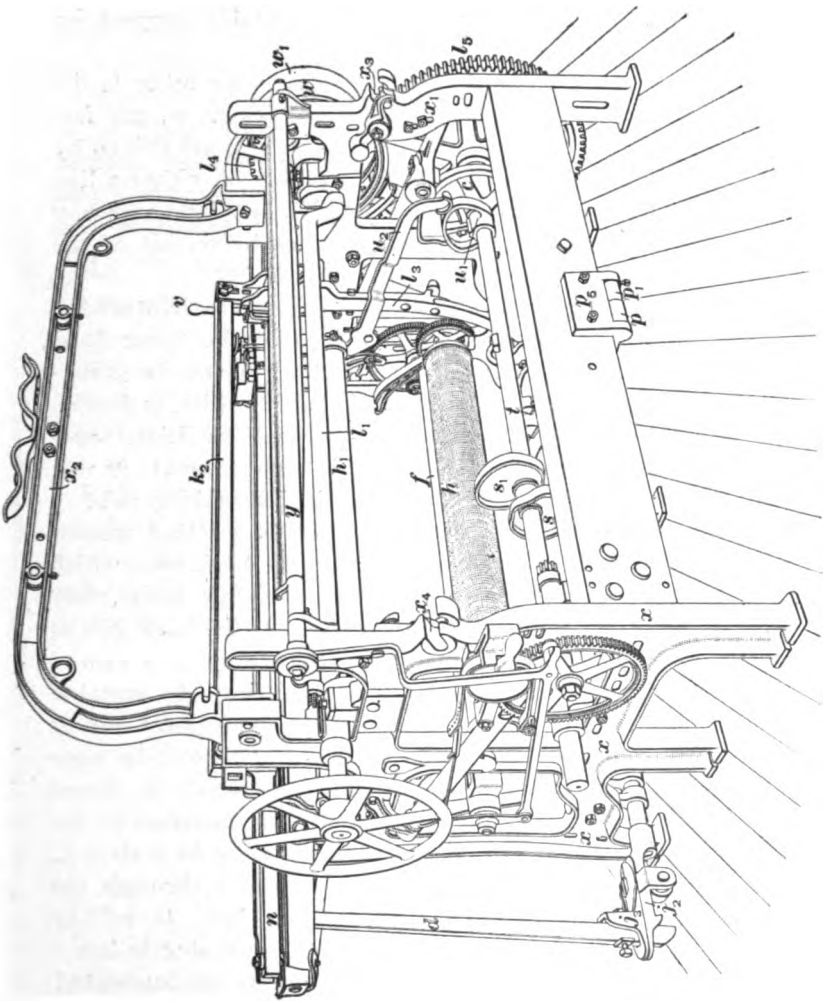

FIG. 2

Digitized by Google

5. Setting Up the Parts.—The first parts of a loom to be set up are the sides marked x and x_1. These sides are connected by girts and by an arch marked x_2; also, by other parts, all tending to form a strong and suitable support for the different mechanisms of the loom.

Extending from one side of the loom to the other is the crank-shaft l_1. The tight-and-loose pulleys w, w_1 are fastened on one end of this shaft. These pulleys are driven by a belt, which, in turn, is driven by a pulley on either a line or countershaft. This belt runs through a belt fork, and may be shipped from one pulley to the other by means of the shipper handle v.

On this same end of the crank-shaft is also fastened a gear l_4, which engages with and drives another gear l_5, of exactly double the number of teeth of the gear on the crank-shaft. The gear l_5 is fastened to a shaft t, which is known as the cam-shaft. Thus, the cam-shaft will be driven one-half as fast as the crank-shaft; or, in other words, it will make one revolution while the crank-shaft is making two.

On this cam-shaft are fastened two cams s, s_1 that actuate two treadles p, p_1, to which are attached the harnesses, which are omitted in these views. These treadles have their fulcrum on a bracket p_2, which is fastened to the back girt of the loom. On each end of the cam-shaft there is a cam c, known as the **picking cam**, which, through suitable mechanism, actuates the picker stick d on the same side of the loom. At the bottom of the picker stick will be seen what is known as the **parallel motion**, which is shown more fully in Fig. 11. The picker stick is fastened to the rocker j_2 by means of a bolt, the rocker resting on a shoe j_3.

The upper end of the picker stick projects through the shuttle box n on the end of the loom lay. It will be noticed that there is a picker stick and also a shuttle box n at each end of the loom, and that all the parts are duplicated; but, since on plain looms both picker sticks work in exactly the same manner, only one is considered. The lay is supported by the lay swords l_3, which are fastened to the rocker-shaft l_2. Fastened to the top of the lay is a thin strip of

Digitized by Google

either hardwood or iron, known as the **race plate**, on which the shuttle runs in being thrown from one box to the other. The lay is connected to the crank-shaft by means of the crank-arms, and is thus given the motion required by this part of the loom.

One more cam on the cam-shaft that needs to be mentioned is the filling-fork cam u_1, shown in Figs. 1 and 2. This cam actuates the lever u_2, which in turn actuates the filling fork in such a manner as to stop the loom at any time the filling may be absent.

6. The loom beam on which is wound the warp, rests in the supports x_3, x_4. The yarn passes from the beam over the whip roll y, through lease rods, through harnesses that are connected by means of straps at the top to rolls and at the bottom to the treadles, and finally through a reed that is supported by the lay and held in place by means of the reed cap or lay cap k_2.

Referring to Fig. 1, a is the breast beam of the loom, over which the cloth passes. It then passes behind the roller h_1, around the sand roll h, and is finally wound upon the iron rod (cloth roll) f. The sand roll takes up the cloth and is driven by means of the take-up motion g.

Digitized by Google

PRINCIPAL MOTIONS OF A LOOM

SHEDDING

SHEDDING BY CAMS

7. Fig. 3 shows, in detail, the shedding mechanism of a plain loom; t is the cam-shaft; s, s_1 the cams; and p, p_1 the treadles to which the harnesses q, q_1 are attached by straps. Above is the harness-roll shaft q_2, with the harness rolls q_3. The cams s, s_1 act on the round bowls p_2, p_3, which revolve on studs set in the treadles; q, q_1 are the harnesses required to be lifted to form the shed; q_4 are the strap and jack-connections, which join the bottoms of the harnesses to their respective levers. These straps are capable of being lengthened or shortened as may be required; q_5 shows the strap connections for the top of the harnesses. These straps are fixed to the rolls q_3, which are of different diameters. The rolls are setscrewed on a shaft q_2. The difference in the diameters of the rolls is required in order to compensate for the extra rise that must be given to the back harnesses so that the yarn drawn through it will rise to the same height as the yarn in the front harness. This would be more noticeable if several harnesses were employed. For the same reason the cam that actuates the back harness should always be larger than the one that actuates the front.

The manner in which the cams s, s_1, Fig. 3, cause the rise and fall of the harnesses q, q_1 should be considered. Each cam moves the harness, which it actuates, in one direction only, straps and roller connections being necessary to bring the harness back to its original position. Thus, when the cam-shaft t, Fig. 3, revolves so that the cam s_1 is in the position shown in this figure, the harness q will be lowered

Digitized by Google

by the direct action of this cam, forcing down the treadle p. When, however, the shaft t has revolved so that the cam s_1 has assumed the position shown by the cam s, some other mechanism must be employed to lift the harness q, since the cam s_1 not being connected in any manner to the bowl p_2, but simply coming in contact with it, will have no action on the harness q when it is rising.

The raising of the harness q is accomplished by means of the strap-and-roller connection shown in Fig. 3. As the cam s revolves, it forces down the treadle p_1, which in turn lowers the harness q_1. As this harness is lowered it turns the rollers q_2. The revolving of the rollers winds up the top strap connected to q, which raises that harness. Thus the downward motion of the harness q_1 produces an upward motion of the

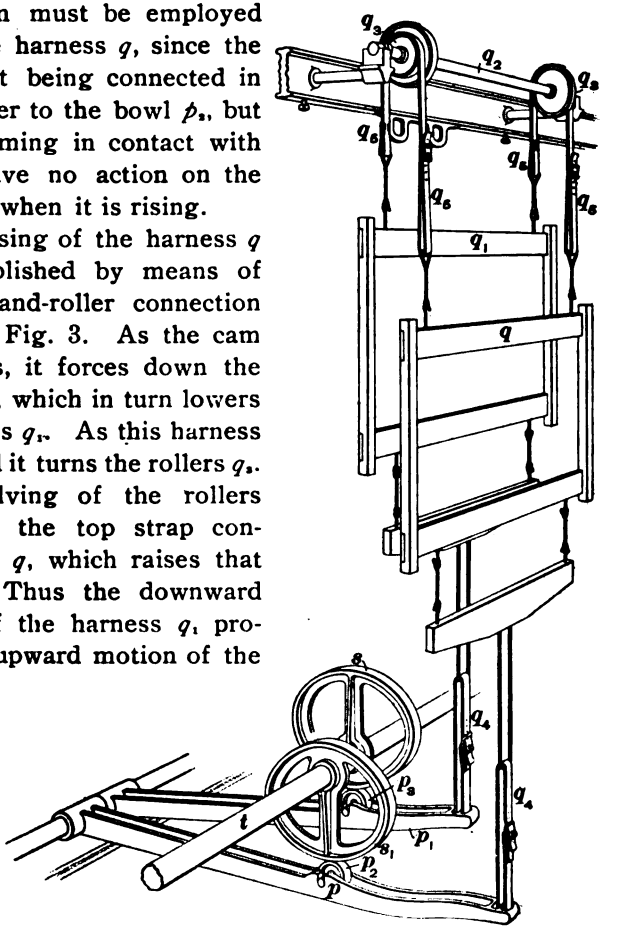

FIG. 3

harness q, and, consequently, as one harness is depressed to allow the yarn drawn through it to form the bottom of the shed, the other harness is raised in order to form the top of the shed.

Digitized by Google

Although inaccurate, the phrases *top shed* and *bottom shed* are frequently used in a mill. The word shed really indicates the entire space enclosed by the upper and lower lines of warp. The expressions top shed and bottom shed, as commonly used, are abbreviations for the expressions *top line of the shed* and *bottom line of the shed*, and as they have become popular, they will be used in this connection. The top and bottom lines of a shed are shown in Fig. 4, the arrows showing the direction of the simultaneous movement of each line so that the top line becomes the bottom, and vice versa, at the next pick.

Harnesses are placed at right angles to the warp ends, and must be so connected to the shedding motion that a vertical pull will be exerted upon them, for a side movement, however slight, is detrimental to good weaving. They must also be moved at a varying speed, in order that as little strain as possible will be brought on the yarn when the shed is open.

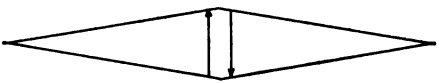

FIG. 4

8. **Shape of a Cam.**—The ideal movement that can be given to a harness is to commence to lift or depress slowly, gradually increasing in speed to the center of the shed, when it again gradually becomes slower until the shed is formed. The strain on the warp ends rapidly increases as the warp approaches the upper and lower lines of the shed; therefore, it follows that when the shed is fully open, the warp yarns are at their greatest tension, and may be easily broken, especially if an abrupt movement is given to them. It is therefore necessary to give the easiest possible motion to the yarn when the shed is opened. As the shed closes, tension is gradually being reduced, and when in mid-position, there is little or no strain on the yarn; therefore, while passing the center of the shed, extra speed may be given to the yarn, in order to save time.

Harnesses actuated by cams are capable of approaching the nearest to this perfect form of shedding, since the

Digitized by Google

movement of the harnesses is positively controlled both in rising and falling. Consequently, if the cam is so shaped that it will give this movement, it will impart it to the harnesses. For this reason cams are always used to produce the shed on a plain loom.

9. Construction of a Cam.—When constructing a cam there are two points always to be considered. These are the *dwell of the cam* and the *size of the shed.*

By **dwell** is meant the length of time the harnesses are kept stationary in order to allow the shuttle to pass from one side of the loom to the other. This dwell is not always a constant quantity, since different makers adopt different methods. The dwell is obtained by having a portion of the cam constructed with its outer edge a true arc of a circle; thus, when the treadle is in contact with that part of the cam, there will be no motion of the harnesses.

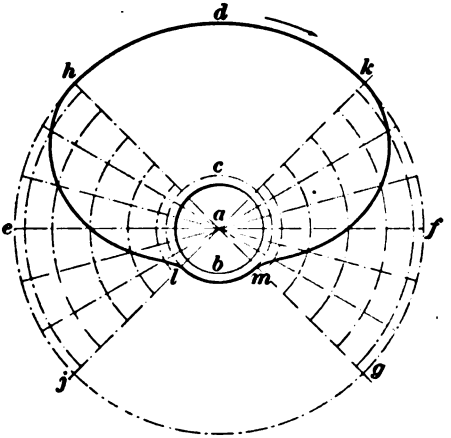

FIG. 5

In regard to the size of the shed formed by the cam, it can readily be understood that a cam constructed to give a certain size shed cannot be used in a loom where a much larger or much smaller shed is required. In illustrating the construction of a cam, one will be taken that is commonly used on plain work of ordinary counts.

Fig. 5 shows a cam with its construction lines. This figure illustrates a cam suitable for ordinary work, the change parts being drawn on lines that would give the harnesses a steady motion, while the dwell allows the shuttle a period equal to one-half a pick, in which to pass from one side of the loom to the other.

Digitized by Google

10. As has previously been shown, the cam-shaft makes one revolution while the crank-shaft is making two; consequently, one revolution of a cam on the cam-shaft will be equal to two picks of the loom.

With a center *a*, and a radius equal to one-half the diameter of the cam-shaft, describe the circle *b*. With the same center, and a radius equal to one-half the diameter of the cam-shaft plus the thickness of the cam-hub, describe the circle *c*. The circle *c* represents the inner throw of the cam. To the radius used in describing this circle add the full throw of the cam, and draw the circle *d*. The circle *d* represents the outer throw of the cam. The circles thus described give the essential parts of the cam from which to work.

Draw a line *e f*, dividing the circles into two equal parts. Next draw the lines *g h* and *j k*, having the lines cut the outer circle at points that will divide the circle into four equal parts *h j*, *g j*, *g k*, *h k*. Take the arc *h k* for the pause when the harness is at its lowest point, and the arc *g j*, on the opposite side, for the pause when the harness is at its highest point. Then the arc *h j* must be occupied in raising the harness from its lowest to its highest point, and the arc *g k* in moving from the highest to the lowest. The arc *k h* represents the dwell of the harness when lowered, and the arc *g j* the dwell when raised. Since each of these represents one-quarter of the circle *d*, the time occupied by the cam in moving through any one of these distances will be half a pick.

It is now necessary to draw curved lines from *h* to *l* and from *k* to *m*, of such form as to give to the harnesses the motion previously mentioned. In order to accomplish this, it is first necessary to divide the arcs *h j* and *k g* into any number of equal parts. Six parts are used in this illustration. Draw radial lines through these intersections.

Next divide the distance between the two circles *c* and *d* into the same number of unequal parts, commencing with a small division near the outer circle, increasing the size of the division as the center of the space is approached, and

Digitized by Google

then decreasing proportionately as the inner circle is approached.

With the common center *a* and radii equal to the distances from center *a* to the divisions made, describe arcs of circles cutting the radial lines previously drawn. From the point *h*, draw a curved line, having it pass through each of these intersections until it reaches the point *l*. From the point *k* draw a similar curved line until it strikes the point *m*. This will complete the necessary lines, and as a result the cam *l h k m* is obtained.

As this cam actuates one harness only, it is readily apparent that as many cams must be constructed as there are harnesses to be operated. These cams are so placed on the cam-shaft of the loom that they will not only give the desired lift to the harnesses, but also that each cam will actuate the harness which it governs, at the proper time.

It should also be noticed in this connection that the throw of the cam which actuates the back harness must be a little larger than that of the cam which actuates the front harness. Consequently, the hub of the back cam should be made a little smaller to allow the harness to be raised higher, and the outer circle made correspondingly larger to allow it to be depressed more.

11. Treadles.—The treadles of a loom may be considered as levers of the third class, since they have their fulcrum on a bracket bolted to the back girt of the loom, as previously explained, the weight being applied at the point where the harnesses are connected and the power exerted between these two. It will be seen, then, that the point of the treadle where the weight, or, in other words, the harness, is attached, in moving up and down, will describe an arc of a circle, and that the curvature of this arc will be inversely proportional to the length of the treadle; that is, the shorter the treadle, the greater will be the curvature. This will result in the harnesses being given a backward and a forward movement, which must be avoided, if possible; consequently, the length of the treadle

Digitized by Google

should as far as possible be such that this curvature will be reduced to a minimum.

Again, the bowl in the treadle should be so situated that its center, when the harness is in its central position, will be in a line perpendicular with the center of the cam-shaft, since if this is not done, the relative speed of the rise and fall of the treadle will be affected.

12. Another important point that should be noticed in connection with the cam is that at the central point of its lift the point of contact of the treadle with the cam should be level with the fulcrum of the treadle. This will insure the point at which the harness is attached moving the same distance above this central position as it does below, thus lessening the tendency of the treadles to pull away from a straight line.

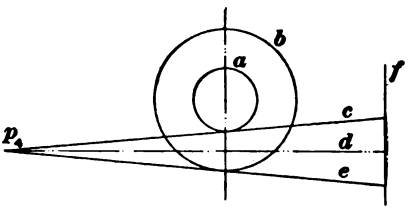

FIG. 6

Figs. 6 and 7 illustrate this point. Dealing first with Fig. 6, p_4 is the fulcrum of the treadle, or the point where it is attached to the loom. The circle *a* represents the inner throw of the cam, while the circle *b* shows its outer throw. From this it will be seen that the line *c* will be the line of the treadle when raised, and the line *e* will be the line of the treadle when lowered.

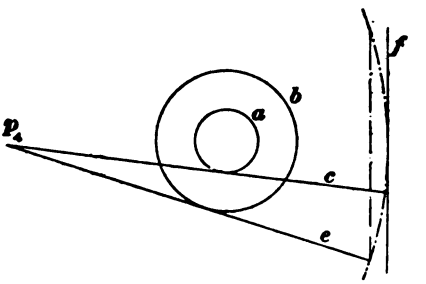

FIG. 7

It will be noticed that these lines are equally distant from the central position of the treadle, which is represented by the line *d*; consequently, the treadle will move away from the perpendicular line *f* the same distance in both its upper and lower positions, and it will also be noticed that this distance is the least possible with the conditions such as they are.

Digitized by Google

In Fig. 7, the fulcrum p_4 of the treadle has been raised, and the result is readily seen. In this case, the end of the treadle, when at its upper position, is nearly in contact with the line *f*, but when lowered to the position represented by the line *e*, it will be noticed that it has been drawn some distance from the line *f*. Such a position of the treadles would result in the harnesses having a backward and a forward movement, which should be avoided as much as possible in weaving. This and other points raised in connection with the description of the construction of the loom and of loom fixing may appear trivial when considered in connection with one revolution of the cam-shaft, but when it is realized that a loom makes many picks per minute, sometimes as high as 200 or over, it will be seen that the neglect of such apparently small matters would result in much unnecessary vibration and damage to the loom and material.

13. Throw of the Cam.—As has already been stated, the **throw of the cam** is to be ascertained from the size of the shed required. If the length of the treadle and the length from stud or fulcrum to point of contact with the cam are known, the throw necessary to give this shed is easily obtained.

Since the length of the arc through which any point of a lever moves is directly proportional to its distance from the fulcrum, we have the following simple proportion: Size of the shed : throw of cam = whole length of treadle : length of treadle from fulcrum to point of contact. This gives the following rule:

Rule.—*To obtain the desired throw of cam, multiply the size of shed required by the length of the treadle from the stud or fulcrum to the point of contact, and divide this result by the whole length of the treadle.*

EXAMPLE.—The length of treadle is 30 inches, distance from stud to contact 18 inches, and the shed required 3 inches; what should be the throw of the cam?

SOLUTION.—According to the rule: $18 \times 3 = 54$. Dividing by the length of the treadle, $54 \div 30 = 1.8$ in., the throw of the cam. Ans.

Digitized by Google

PICKING

14. After the harnesses have been opened and a shed formed, the shuttle that contains the filling must be thrown from one side of the loom to the other, passing through this opening and leaving a pick of filling. This action of the loom is known as **picking.** It is a motion entirely different from any other movement of the loom, and is one in which a considerable amount of force must be exerted at a given moment.

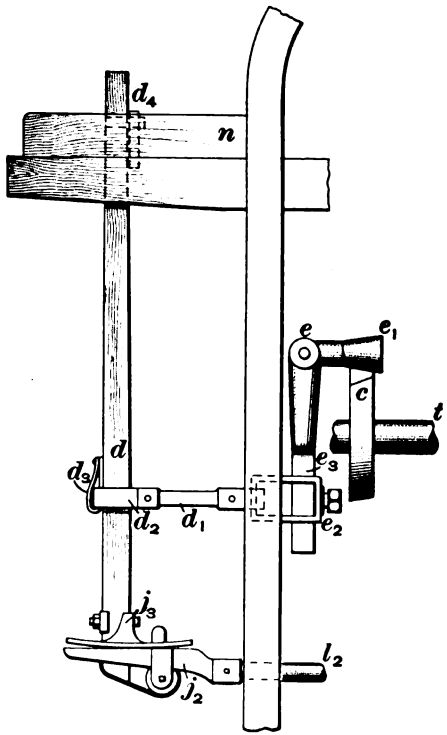

FIG. 8

There are several styles of picking motions in general use on power looms at the present time. In America, the two principal ones are the *shoe*, or *batwing*, *pick*, and the *cone pick*, but as the cone pick is the one in general use on plain cotton looms, that alone will be dealt with at present. The one here referred to is an **under-pick** motion.

Figs. 8 and 9 are views of the picking motion; c is the picking cam on the cam-shaft t; e_1 is the cone on which the cam acts; e is the picking shaft. Fastened to the end of the picking shaft is the picking-shaft arm e_3, to which is fastened a collar e_2. Fastened to e_3 is a short lug strap connected with the lug stick d_1. Another lug strap d_2 connects the lug stick with the picker stick d. At the foot of the picker stick is the

Digitized by Google

parallel motion, which consists of the rocker j_3, shoe j_3, and other parts shown.

The action of the picking motion is as follows: As the projecting part, or nose, of the cam in revolving on the camshaft strikes the cone e_1, it forces it upwards. This, in turn, throws the bottom of the shaft arm e_3 inwards, which movement draws the picker stick toward the loom by means of connections consisting of a lug stick and lug straps, as previously explained. The picker stick, by means of the force with which it is drawn in, delivers a blow to the shuttle sufficient to send it across the loom and into the opposite box. After the shuttle has entered the opposite box, a picking motion of exactly the same construction will then throw it back again across the loom.

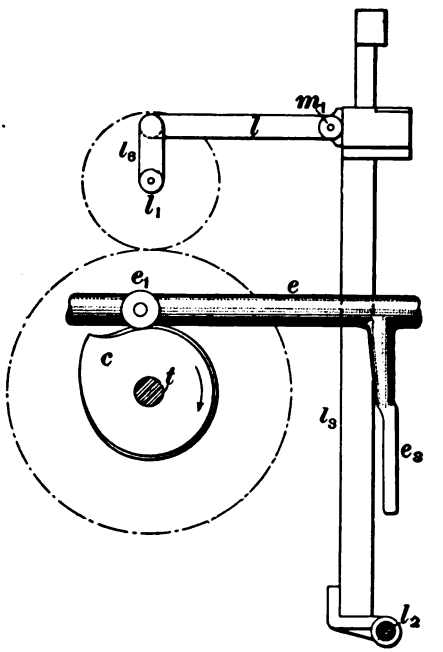

FIG. 9

It will readily be seen that the intensity of the force with which the picker stick d is thrown in toward the loom will depend on the intensity of the force that the cam c imparts to the cone e_1. This, of course, will depend to a great extent on the shape of the cam.

15. Picking Cams.—Although a picking cam differs very materially from the harness cam, yet in constructing a picking cam a principle must be adopted similar to that used in the construction of the shedding cams; that is, the first

Digitized by Google

portion of the rise must be gradual, so that it will commence to move the shuttle gradually and increase in velocity toward the end of the stroke. The construction of a picking cam will depend on the force that the cam is required to exert, and on the amount of time in which it is allowed to exert the required force.

Fig. 10 illustrates these two points; *a c f g* represents the outside line of a cam. When the cam revolves until the part *c* comes in contact with the cone, it will commence to move the picker stick. From *c* to *a* is occupied in delivering the pick. By extending the line cg_1 until it cuts the outer circumference, the arc *a d* is obtained, through which the point of the cam moves while delivering the blow. If the

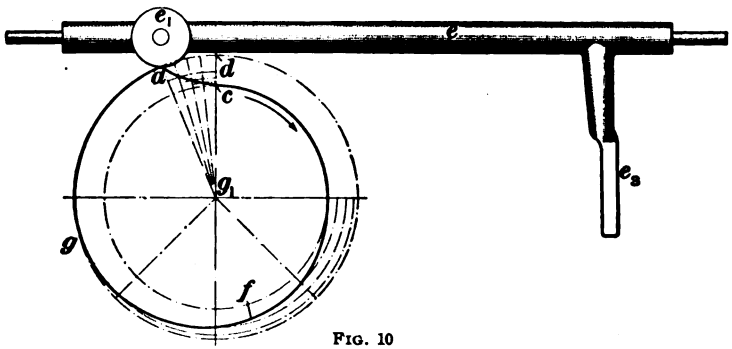

FIG. 10

distance from *a* to *d* is lessened, it can readily be seen that, with the cam revolving at the same rate of speed, more power will be exerted. But this would result in a harsh pick, which should be avoided as far as possible. If, on the other hand, the distance should be increased, less power will be exerted. This would result in a smoothly running pick, but could be carried to such an extent that the picker stick would not receive the required power to enable it to send the shuttle across the loom.

The size of cam and the curves required have been found very largely by experiment; for, while it is possible to figure the length of the arms on the picking shaft and the length of

Digitized by Google

the cam-point to move the picking stick a certain distance in the shuttle box, the amount of force sufficient to throw the shuttle has been very difficult to determine, since the amount of resistance with which the shuttle meets in passing through the shed varies to a great extent on different kinds of work.

16. If a perpendicular line should be drawn passing through the center of the cam-shaft, it would be found that the cone was set some distance back of this line. The object of placing the cone in such a position is that the force of the cam may be exerted while moving upwards. If the cone were set directly over the center of the cam-shaft, a good deal of the force would be exerted in a horizontal direction, and since the motion of the cone is vertical, or nearly so, it will be readily seen that a cone set in this position would result in a very harsh and undesirable pick.

It will be noticed by reference to Fig. 8, that the diameter of the cone e_1 varies. The active surface of the picking cam is also beveled at varying angles to fit the surface of the cone, so that the face of the cam may be constantly in full contact with the cone.

17. Parallel Motion.—The parallel motion is one of the many parts of a loom necessary to the perfect working of the whole, but especially to the picking. Probably no part of the construction of a loom is subject to so much criticism as the picking motion, and by no means the least important part of the picking motion is the parallel motion. A picking cam could be of a perfect shape, and the cone in the exact position for its best working, yet, if the parallel motion were wanting in exactness, the result would be undesirable.

Fig. 11 is a view of the parallel motion showing also the picker stick and shuttle box, the picker stick being at its backward position; j_3 is the rocker of the parallel motion to which the picker stick d is attached by means of a bolt, as shown in the illustration. This rocker rests on a shoe j_4, and is held in position simply by a projection j_5, which passes through a slot cut in the rocker, the rocker thus

Digitized by Google

being allowed a free movement as the picker stick moves backwards and forwards.

The strap j_4, one end of which is fastened to the picker stick, while the other end is fastened to a coil spring j_1, serves to bring the picker stick to its backward position after it has delivered the shuttle. It also keeps the rocker down on the shoe, preventing it from springing upwards while picking.

18. Picker sticks serve to transmit the power imparted by the picking cam. As considerable strain is brought to bear on them, the splitting of picker sticks is a common occurrence in the weave room.

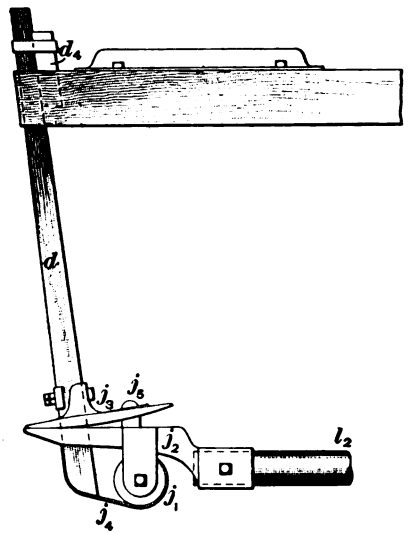

FIG. 11

Fastened to the upper end of the picker stick is the part d_4 known as the **picker.** On plain looms the picker is generally made of leather and is fastened to the picker stick by means of a collar which passes around the upper end of the picker and is connected to the picker stick. In the front part of the picker, a hole is cut of such a shape as to receive the shuttle point.

19. Object of the Parallel Motion.—The object of the parallel motion is to move the picker in a direction as nearly as possible parallel to the race plate. It will be noticed that without some such arrangement, the picker in traveling from one end of the box to the other would describe an arc of a circle. This would give it a higher position at one part of its movement than at another, thereby resulting in a very unsatisfactory pick.

Digitized by Google

To remedy this the loom builder has adopted the parallel motion.

The shoe of the parallel motion is perfectly level, while the rocker to which the picker stick is fastened is curved. This curve of the rocker is such that it forms the arc of a circle that would be drawn by using the picker as a center, and a radius equal to the distance from the picker to the shoe of the parallel motion. Thus, it will be seen that as the picker stick moves backwards and forwards, its fulcrum being at the rocker, the upper end, or the picker, will be at the same level when at the back of the box as at any other point.

20. Shuttle Box.—The shuttle box is simply a continuation of the race plate, with the exception that sides are added in order to receive the shuttle.

Some looms have a **binder** placed on the back of the box, while on others it is at the front; these binders are made of wood or iron, and are of a suitable shape to project into the box. Its outer end works on a stud and is adjustable; the other end is held in position by a finger on the protector rod, this finger being kept pressed against the binder by means of a spring on the protector rod. The shuttle must overcome this spring when entering the box. Leather check-straps are also placed around these fingers to further check the shuttle.

21. Shuttles.—The object of the **shuttle** is to deliver a pick of filling from the cop, or bobbin, that it holds. Shuttles are made of wood; they are hollowed out in the center for the reception of the cop, or bobbin. A metal tip is inserted at each end to protect the shuttle and to present a smooth point to the yarn when passing through the shed. In the shuttle, a metal tongue, or spindle, is inserted which is hinged at one end and extends almost the entire length of the hollow part of the shuttle. The tongues, or spindles, are of various shapes, but the aim of all is to hold the cop, or bobbin, firmly while the shuttle is in use. A small porcelain or iron eye is placed at one end of the shuttle through which the filling runs while being unwound.

Digitized by Google

BEATING UP

22. As the shuttle is thrown from one side of the loom to the other, part of the filling that it contains is left in the shed. This is known as a **pick of filling.** It now becomes the object of the loom to push this filling up to the cloth previously woven; this operation is known as beating up and is performed by the **lay of the loom,** in which is placed the reed dividing the warp threads.

This motion is shown in Fig. 12, which gives a view of the **lay** and its connections; the lay k is supported by the lay swords l_2, which are attached to the rocker-shaft placed near

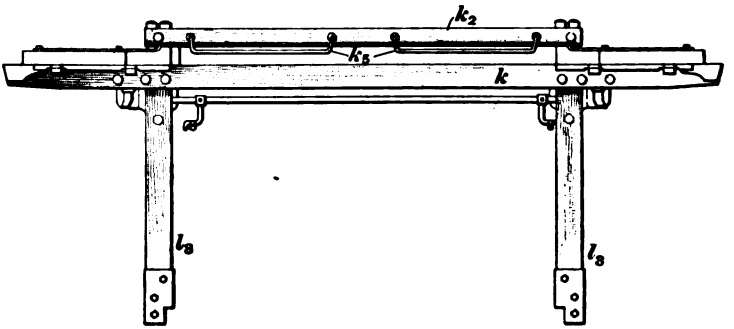

FIG. 12

the floor. This shaft is held by two brackets in which it is free to oscillate.

The lay consists of a heavy piece of wood extending from the outside end of one shuttle box to the outside end of the opposite box. The extra weight and strength for heavy work is sometimes obtained by bolting iron plates on the back and front. On the top of the lay k is fastened the race plate, which is usually a thin piece of straight-grained hardwood screwed to the lay. In most cases it forms a perfectly straight surface. Sometimes, however, it is gradually hollowed at the center so that it is from $\frac{1}{8}$ to $\frac{1}{4}$ inch below a straight line. In some looms the race plate consists of a thin strip of iron.

Digitized by Google

A groove is cut in the lay for the reception of the reed, and there are also two slots, one at each end, for the reception of the picker sticks, as has already been explained. The reed cap k_1 has a groove on its under side in which sets the top of the reed. The reed is held in position by the grooves in the lay and reed cap, the reed cap being bolted to the lay swords as shown in Fig. 12.

The movement of the lay is obtained by means of the crank-shaft l_1 and the crank l_2 shown in Fig. 9; l is the crank-arm, which is connected to the crank l_2 by a leather or steel strap. A similar connection is made at the lay sword where a pin m_1 is placed, the crank-arm being attached to it by another steel band.

The object of driving the crank-shaft at twice the speed of the cam-shaft will now be readily apparent, since it will be seen that it is necessary for the lay to beat up the filling at each pick of the loom and, although one revolution of the cam-shaft causes two sheds to be formed, and, consequently, two picks to be placed in the cloth, yet one revolution of the crank-shaft serves to move the lay forwards only once, and therefore drives the filling up to the cloth only once.

The lay serves two purposes: first, it beats up the filling, and, second, it acts as a rest on which the shuttle may slide, in passing from one box to the other. These are, in a certain sense, opposed to each other, since when the lay is beating up the filling, it should give a quick, sharp blow; while on the other hand, when it is carrying the shuttle, its motion should be slightly retarded. Consequently, the lay must be driven in such a manner that it will have a varying speed. In other words, the driving arrangement must be eccentric.

23. Eccentricity of Lay.—In Fig. 13, the line $a\,b$ represents the position of the lay and lay sword when at their forward throw, and the line $a\,c$, when at their backward throw; d represents the circle described by the crank in revolving. It will be noticed that the line $b\,c$ represents the

Digitized by Google

throw of the lay; therefore, this distance must be equal to the diameter of the circle described by the crank.

When the lay is at its forward throw, the crank must be at its front center, which is *f*. This gives the length of the crank-arm, which is *b f*. If the center *g* of the throw of the lay is taken as a center, and an arc described with a radius equal to the length of the crank-arm, it will be found to cut the circle of the crank at *1* and *2*. Therefore, while the lay is moving from *g* to *b* and back to *g* again, which is half a stroke, the crank moves from *2* through *f* to *1*.

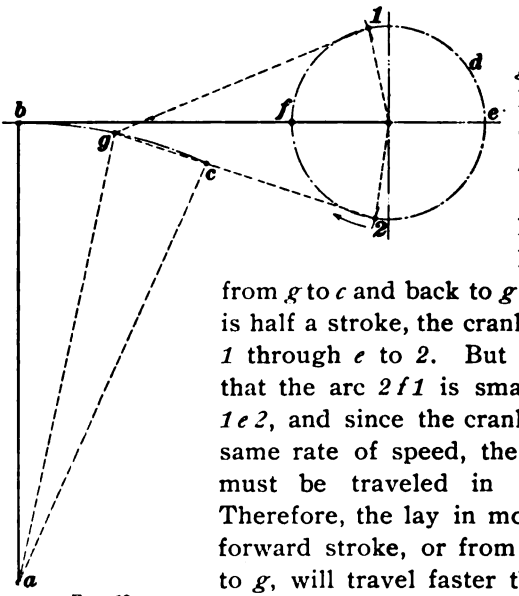

FIG. 13

On the other hand, while the lay is moving from *g* to *c* and back to *g* again, which also is half a stroke, the crank is moving from *1* through *e* to *2*. But it will be noticed that the arc *2 f 1* is smaller than the arc *1 e 2*, and since the crank revolves at the same rate of speed, the shorter distance must be traveled in a shorter time. Therefore, the lay in moving through its forward stroke, or from *g* to *b* and back to *g*, will travel faster than while accomplishing its backward stroke, or from *g* to *c* and back to *g*. This is known as the **eccentricity of the lay**, and the amount of this eccentricity is indirectly proportional to the length of the crank-arm, and directly proportional to the diameter of the circle described by the crank. The larger the circle and the shorter the crank-arm, the greater will be the eccentricity.

Two or three other important points connected with the eccentricity of the lay should be carefully noted. It will be readily seen that on all looms it is essential that this eccentricity should be great enough to allow the shuttle

Digitized by Google

time to pass from one box to the other; while on the other hand, if the throw of the crank should be increased, the distance through which the lay moves would be increased proportionately. This would produce a greater chafing of the warp yarns, which should be avoided as much as possible. The method adopted by loom builders to overcome this difficulty, is to place the crank-shaft in a lower plane than the point where the crank-arm is connected with the lay. By increasing the diameter of the circle described by the crank in proportion to the length of the crank-arm, the requisite amount of eccentricity is obtained, and at the same time the crank is taken out of the way of the warp.

It will be noticed, in the illustration, that the line *a b*, or the position of the lay at its forward stroke, is vertical. The lay is set in this manner so that the reed, when it strikes the cloth in beating up the filling, will be at right angles to the cloth. If the lay were allowed to pass this central position in its backward and forward swing, it would also cause a vibration of the loom, which would be very detrimental to its good working.

24. Bevel of the Race Plate.—When the lay is in its backward position, the bottom shed forms an angle to a line that is horizontal. The race plate of the lay, when in this position, should form a similar angle; that is, it should be parallel with the bottom shed of the warp; but it will be noticed that the reed is constantly in a line parallel with the swords on which the lay works; consequently, this will cause the race plate and the reed to form what may be called a **groove**, when the shuttle is being thrown from one box to the other. This will result in the shuttle running much more steadily and being less liable to fly out.

25. Reeds.—One object of the reed is to guide the shuttle while passing from one box to the other and, in order to accomplish this object, it is very essential that the reed should be perfectly straight and in an exact line with the back of the box.

Digitized by Google

A reed consists of a top and bottom rod a, a_1, Fig. 14, into which are set flat wires b. These wires are securely fastened in place by winding tarred cord c between them and around the rods. The warp ends are drawn between these wires—a certain number between each two consecutive wires; thus the reed also serves to hold the warp ends in their correct position while the lay is passing back and forth in beating up the filling.

Reeds are spoken of as having so many *dents per inch*, that is, so many wires to each inch lengthwise of the reed. This number varies very largely in the cotton trade, running from six to ninety. A different number of ends to the dent will be found to be drawn through reeds, the most common number being two ends per dent. Thus, the reed serves to determine the fineness of the cloth; that is, it governs the number of warp ends in each inch of cloth.

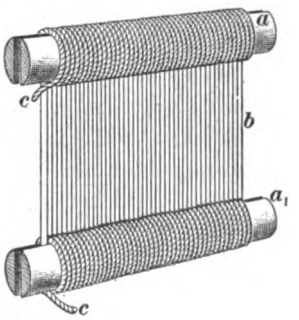

FIG. 14

26. Fast Reeds.—In the majority of looms run at the present time, the reed is securely fastened to the lay, being held perfectly rigid. With such a construction, it is very evident that if the shuttle has, for any reason, failed to get well into its box and is still in the shed when the reed is in the act of beating up the filling, the result will be the straining of the warp threads, and the breaking of some of them.

27. The Protector.—When a loom is provided with a fast reed, it also contains a device called a **protector,** the object of which is to guard against such conditions. Such a device is shown in Fig. 15; k is the lay on which the shuttle runs. The protector consists of a rod b_1 that runs the whole length of the lay between the boxes and rests in two or three bearings fastened to the under side of the lay. At each end of the lay this rod is curved and carries a finger b_2 that presses against the binder k_1, as has been described. On the

Digitized by Google

end of the rod that is at the shipper side of the loom, there is placed, in addition to the finger, a projection *b* known as the **dagger.** On the loom frame is a casting *c* known as the **frog.** This frog contains a steel bunter *d* on its upper side corresponding to the shape of the edge of the dagger. Bolted to the frog is a bracket b_2, Fig. 22, so set that it is nearly in connection with the shipper of the loom.

The action of the protector is as follows: When the shuttle enters the box, the binder k_1 is pushed outwards and

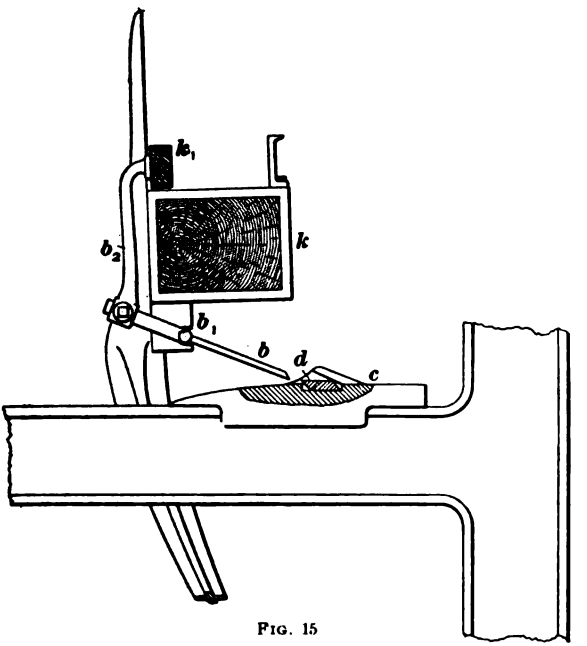

FIG. 15

pushes back the finger b_1. This causes the dagger *b* to be lifted so that as the lay comes forwards the dagger passes over the steel bunter *d* in the frog. If for any reason, the shuttle fails to enter the box, the binder remains stationary and the finger b_1 retains its position, so that when the lay comes forwards, the dagger engages with the frog, thus checking the movement of the lay. But in doing this, the frog is pushed forwards sufficiently to enable the bracket to

Digitized by Google

push against the shipper and throw it out of position, thus shifting the belt from the tight to the loose pulley.

Frequently the binder is placed at the front of the box. In this case, the dagger is placed on the protector rod at the center of the lay, while the bunter is at the center of the breast beam and on the under side; but since the action of both is very similar, only one has been described here.

28. Loose Reeds.—In the case of loose reeds, the reed b, Fig. 16, is held in position by a loose board b_1. This

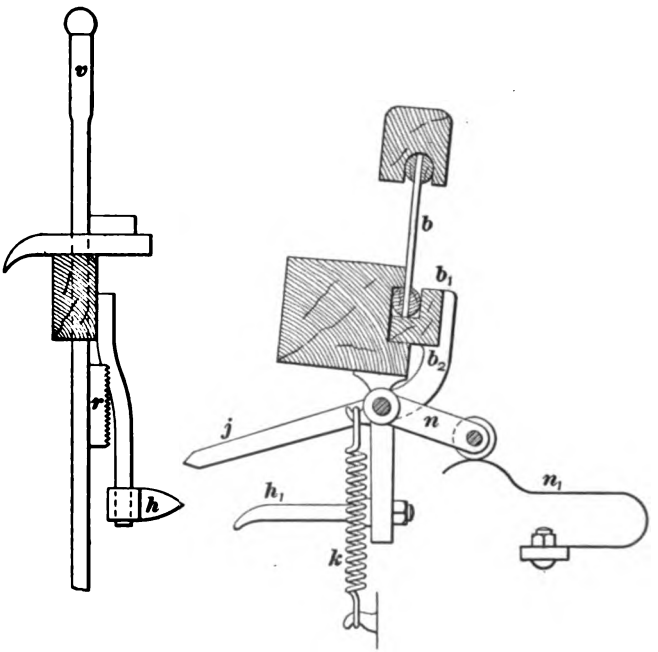

FIG. 16

board extends the entire length of the reed and is held by means of a lever b_2, to which is attached a spring k. When the lay is at its backward stroke and the shuttle is being thrown across the loom, the board b_1 is held more strongly by means of the lever n, which comes in contact with the spring n_1. When the shuttle from any cause is trapped in the shed, the pressure of the shuttle against the reed, caused by

Digitized by Google

the warp yarn pressing against the shuttle, is sufficient to throw out the reed and thus release the shuttle.

It will be noticed that with such an arrangement and without any additional mechanism, the reed would be unable to deliver a sufficiently strong blow in beating up the filling. To overcome this difficulty, a frog *h* is placed on the front of the loom in such a position that, as the lay comes forwards, a finger h_1 attached to the lever, which holds the board against the reed, will just slide beneath the frog, thus holding the reed securely in position. This attachment is so arranged that it cannot act until the shuttle is well into the box, thus preventing any liability of the reed being fast so long as the shuttle is in the shed.

When the reed is knocked out by the action of the shuttle, the loom will be stopped by means of the dagger *j*, the action of which is as follows: The reed in being pushed back by the shuttle will throw the loose board b_1 with it, thus raising the dagger *j*, which as the lay comes forwards will come in contact with the casting *r* on the shipper handle *v*, thus throwing *v* out of its retaining notch and stopping the loom. As long as the shuttle is not trapped in the shed, the board b_1 will retain the position shown in the figure, and the dagger *j* will slide below the casting *r*, and, consequently, will not interfere with the shipper handle. The loose reed loom is commonly used in England and other European countries.

Digitized by Google

AUXILIARY MOTIONS OF A LOOM

LET-OFF MOTIONS

29. The motions dealt with in the following articles are termed the **auxiliary motions** of the loom; although secondary to those dealt with, they are extremely necessary to the satisfactory working of all power looms.

Let-off motion is the name applied to a motion employed to control the warp, allowing the necessary amount of yarn to be unwound from the beam and at the same time holding the yarn at a sufficient tension while the cloth is being woven. Two important points should be kept in mind when considering it: First, all let-offs are regulated by the tension on the warp yarn; that is, in all cases the tension on the warp threads must be sufficient to overcome a certain resistance before the yarn will unwind from the beam. Second, the position of the lay when the yarn is let off should be carefully noted.

To obtain the best results on plain looms, the warp should be as tight as possible when the filling is being beaten up. In accomplishing this object, however, one difficulty is met with. When the shed is open there must be a greater length of yarn between the warp beam and the edge of the cloth than when the yarn forms a straight line; and, since the reed strikes the cloth when the yarn is level or when it is starting to open for the next pick, it must follow that the yarn would be slack at this point if there were not some arrangement to prevent it. This is provided for generally by making the whip roll—over which the warp passes—oscillate, so that when the yarn is slack the whip roll, by moving upwards, will take up the slack, and as the yarn is tightened again by the shed opening, the whip roll will be pulled down, thus relieving the yarn.

Digitized by Google

The simplest let-off motion, and one quite generally used, is the ordinary **friction let-off.** This consists of a rope, or in some cases a chain, wound two or three times around the beam head, one end of this rope or chain being made fast to the loom frame, while the other end is attached to a lever about 6 inches from the fulcrum. Weights are placed on this lever sufficient to give the required tension.

So-called **automatic let-offs** are frequently used on looms,

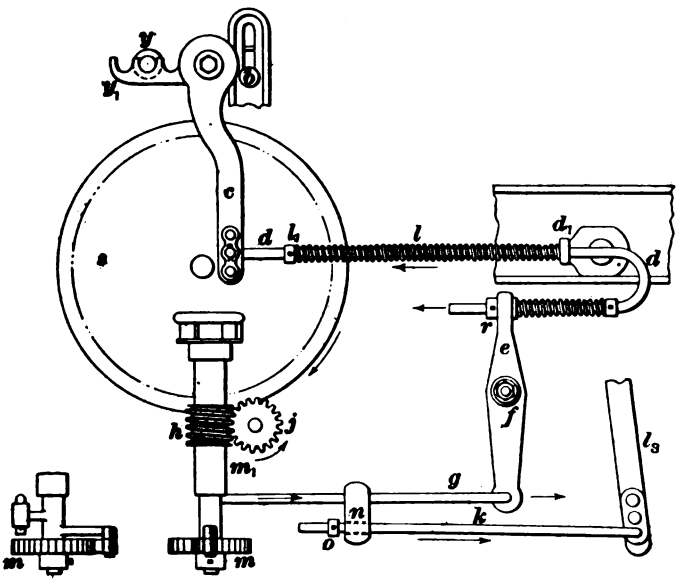

FIG. 17

and a description of the two most commonly used will serve to illustrate the principle of this class of let-off motions.

30. Bartlett Let-Off.—Fig. 17 is a view of the **Bartlett let-off** as applied to looms. The whip roll *y* sets in brackets y_1 that are setscrewed to the whip-roll shaft, which is supported by brackets fastened at the point *b*. The whip-roll shaft sets loosely in these brackets and is free to turn in either direction. On the end of the whip-roll shaft is an arm *c* connected at its lower end to the rod *d*, which is

Digitized by Google

curved at the other end. This rod is held in position by the support d_1, in which it slides. The short arm of the rod d passes through the top of an upright arm e, which oscillates on a stud f, the lower end of this arm being attached to a rod g. On the end of this rod is a bracket carrying a pawl, which operates the ratchet gear m at the bottom of a shaft m_1 containing a worm h. The shaft m_1 is kept from turning, except when acted on by the pawl, by means of a friction strap that passes around a friction pulley on this shaft. The worm h drives the worm-gear j, which is on a shaft containing a gear that drives the beam by gearing into the teeth on the beam head. Working loosely in the collar n is the rod k, which is operated by the lay sword l_3, as shown in the figure.

The operation of this let-off is as follows: When sufficient tension has been placed on the whip roll by the warp yarn pressing on it, the whip roll will be depressed. This will cause the lower end of the arm c to be thrown in, compressing the spring l and bringing r in contact with the upper end of the oscillating rod e. As a result, the lower end of the arm e with the rod g will be thrown toward the beam s. As the rod k is brought forwards by the lay sword, the collar o will come in contact with the collar n, which is fastened to the rod g. This will bring the rod g into its former position; but in doing this it will cause the pawl to engage with and turn the ratchet gear m and thus, through the train of gears described, turn the beam s and let off the yarn. The arrows show the direction in which the parts move when operated by the rod k.

The throw of the pawl that operates the gear m, and consequently the amount of yarn let off at one time, can be regulated by adjusting the collar n.

The tension of the yarn is governed by the spiral spring l, which may be regulated by the collar l_1. It will be seen that if the spring is compressed by moving the collar, it will require more strain on the whip roll to further compress it so as to let off the yarn. In some cases when changing from heavy to light work, or vice versa, it may be found necessary

Digitized by Google

to change this spring entirely in order to compensate for the difference in the amount of strain that the different yarns will stand.

31. Morton's Let-Off.—Fig. 18 represents a sketch of another let-off motion in common use, named **Morton's let-off motion,** which is shown attached to the loom in Fig. 1. This also works in connection with the whip roll, which keeps it under constant control. Until the yarn

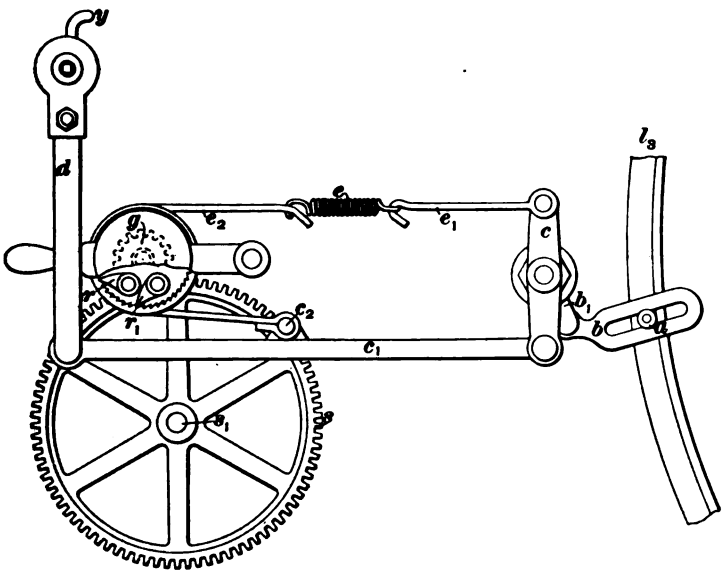

FIG. 18

is drawn tight no warp can be let off, and then the amount liberated is so small that it makes the action almost continuous.

Referring to Fig. 18, l_3 shows the lay sword of the loom, connected to which is a pin a, that slides in a slotted lever b. This lever, being connected to the lever b_1, imparts motion to the rocker c through the aid of a coil spring on the stud on which the rocker c works. At its lower end, the rocker c is connected to a rod c_1, which in turn is connected to an oscillating rod d, this latter rod being fastened to the whip

Digitized by Google

roll y. Connected to the rod c_1 at the point c_2 is a strap e_2 which, passing partly around an internal ratchet gear, is connected to the upper end of the rocker c by means of the spring e and the rod e_1. The ratchet gear has in connection with it a plate, on the inner side of which are placed two pawls r, r_1 that engage with the teeth of the ratchet. Fastened to the ratchet gear is the gear g engaging with the gear s on the shaft s_1. On the inner end of this shaft is a pinion that gears into the warp beam.

The action of this let-off motion is as follows: As the warp becomes tight the whip roll is drawn forwards, the lower end of the oscillating rod d moving correspondingly backwards, drawing with it the rod c_1. This will result in the upper end of the arm c moving forwards, drawing with it the rod e_1, spring e, and strap e_2. The strap e_2 being held tightly against the outer surface of the ratchet gear will turn the gear, since the pawls offer no resistance to the ratchet gear when revolving in this direction.

The internal ratchet gear in being revolved will, through the train of gears mentioned, turn the warp beam and thus let off a certain amount of warp. The rocker c in being moved in the manner described will cause the lower end of the lever b_1 also to be moved backwards, bringing with it the slotted lever b. When the lay next beats up the filling, the pin a on the lay sword will engage with the outer end of the slot in which it works, and by this means bring the different parts of the mechanism to their original position. In doing this, however, the strap e_2 instead of imparting any motion to the internal ratchet gear when moving in this direction, will slip on the outer surface of the gear owing to the gear being held by the pawls r, r_1.

It should be noticed that with this mechanism the warp yarn is let off when the shed is wide open, or, in other words, when the most strain is brought on the yarn. This is considered to be an advantage in weaving.

Digitized by Google

TAKE-UP MOTION

32. The **take-up motion,** as its name implies, is for the purpose of taking up the cloth as it is being woven; and by the rapidity or slowness with which it performs this action it also determines the closeness of the filling, as the reed determines the closeness of the warp threads.

The take-up most commonly found on plain looms, and the one that will be considered, is known as the **intermittent take-up.** This motion is operated by a pawl that drives a train of gears, which in turn drives the sand roll around which the cloth is wound. Different makes of looms have the pawl of the take-up motion operated by different parts of the loom; thus, on some looms it is operated by an eccentric or cam on the cam-shaft. Since the cam-shaft makes only one revolution while two picks are being placed in the cloth, it will be seen that a take-up motion driven in this manner will operate only once in two picks. While this answers all purposes for cloth that contains a large number of picks, it is not as satisfactory for light-pick goods, since it has a tendency to give the filling the appearance of having been placed in the cloth two and two. The pawl may also be operated from either the lay sword or crank-shaft, and, since these parts act during each pick of the loom, the take-up motion will be operated at each pick.

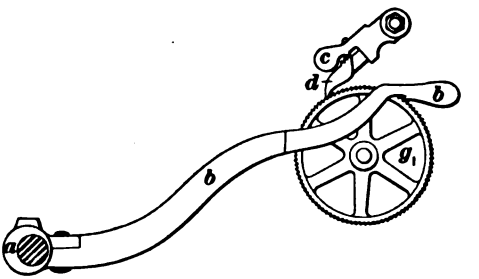

FIG. 19

Fig. 19 is an illustration of a take-up motion that is operated by an eccentric *a* on the cam-shaft. As the cam-shaft revolves, the pawl *b* is pushed forwards, when it engages with a tooth on the gear g_1; then, as the cam-shaft revolves, the arm is brought back again, turning the gear g_1 one tooth; *d* is a pawl that engages with and holds the gear g_1

Digitized by Google

while the pawl *b* is being brought forwards to engage with another tooth.

A better idea of the manner in which motion is imparted to the sand roll from the gear g_1 may be had by referring to Fig. 20, which shows the train of gears through which this motion acts; g_1 in this figure corresponds with the gear g_1 in Fig. 19, which is directly acted on by the pawl of the take-up motion. On the same stud with g_1 is the gear g_2, shown in the end view of this motion; g_2 engages with the gear g_3, which is on the stud with the gear g_4; this last gear drives the gear g_5, which is on the end of the sand roll *h*. Thus,

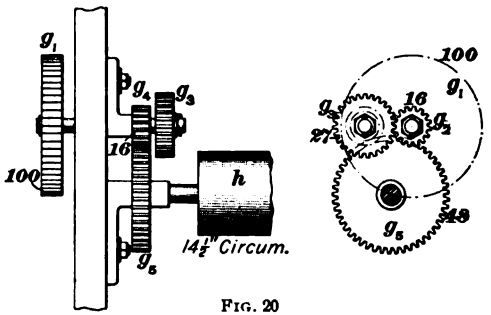

FIG. 20

through the gears g_2, g_3, g_4, and g_5, the gear g_1 turns the sand roll *h*, which carries the cloth forwards.

When a loom is stopped on account of the filling running out or breaking, its momentum generally carries it at least two picks before it stops; consequently, if there is nothing to prevent it, the take-up motion will operate for these two picks, although there is no filling being placed in the cloth. Then when the filling is replaced and the loom started, a thin place will appear in the cloth.

To overcome this difficulty the pawl *d*, Fig. 19, is constructed in such a manner that, when necessary, it will occupy a different position from what it does while holding the gear g_1. As the loom is stopped by the filling running out or breaking, a lever that extends from the filling stop-motion will raise the catch *c* and pawl *d*, allowing the pawl to drop into the position shown in the illustration; then as

Digitized by Google

the loom is started again and the pawl b operates the gear g_1, the pawl d instead of holding the gear g_1 will be pushed back until it regains its former position, the catch c dropping into the teeth on the pawl d and holding it at each pick. It will be seen from the illustration that the loom will have to run three picks before the take-up motion will commence to wind up the cloth.

FILLING STOP-MOTION

33. The **filling stop-motion** is applied for the purpose of stopping the loom when the filling is broken or the bobbin is empty. Without this motion the loom would continue to run until stopped by the weaver. A view of the filling stop-motion is shown in Fig. 21 (a) and (b), the latter being a top view of the filling-fork slide and its connection with the shipper handle.

This motion is situated at one side of the loom between the selvage of the cloth and the shuttle box. Fastened to the cam-shaft of the loom is the cam u_1, known as the filling-fork cam. This cam, in revolving with the shaft, will alternately lower and lift the lever u_2, which is on the stud u, the upper arm r being fastened to the lever u_2. Thus, as the lower part u_2 is moved up and down by the cam u_1, the upper arm r will receive a backward and forward motion.

The filling fork u_3 is pivoted at the point s, its forward end resembling an ordinary three-pronged fork and being bent almost at right angles to the main part; the other end is bent in the same direction about $\frac{3}{8}$ inch from the end, thus allowing it to catch, when necessary, in the upper end of the lever r, which is curved to facilitate catching the fork. The filling fork is so nicely balanced that the least pressure on its forward end will cause it to swing on its pivot, thus giving it the position shown by the dotted lines.

In studying this motion, it should be understood that as long as the loom is running, the upper end of the lever r is constantly receiving a backward and forward motion, due to the action of the cam u_1 on the lower end of the lever u_2.

Digitized by Google

As the pick of filling left in the shed by the shuttle is pushed forwards by the reed, it will come in contact with the prongs of the fork u_3, thus pushing this end of the filling fork toward the front of the loom and at the same time raising its other end out of contact with the upper part of the lever r. This motion is so timed that this end of the lever is about to engage with the filling fork when the filling comes in contact with the prongs. On the other hand, should the filling break or run out, the filling fork will retain the position shown by the full lines in the figure, and the lever r in its forward movement, engaging with the filling fork, will carry it forwards together with the slide u_3 to which the filling fork is attached.

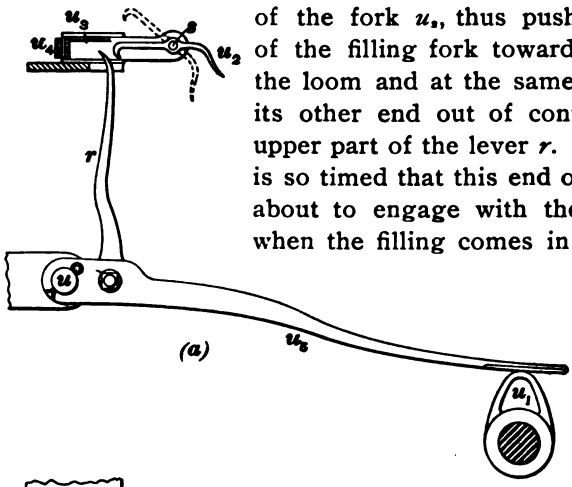

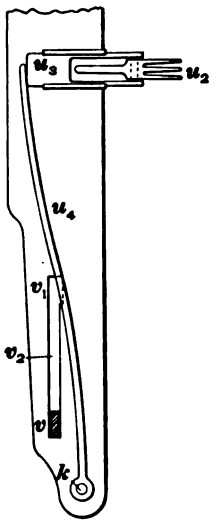

FIG. 21

The other end of this slide is in contact with a lever u_4, pivoted at the point k. As the slide is brought forwards by the action of the lever u_3, it will bring with it the lever u_4, forcing this lever so strongly against the shipper handle v that the latter will be pushed from its retaining notch v_1 and will spring to the other end of the slot v_2 in which it works, thus causing it to occupy the position shown in Fig. 21 (b). This motion of the shipper handle will ship the belt from the tight to the loose pulley and stop the loom.

Digitized by Google

BRAKE

34. Without some special device for stopping the loom after the shipper handle is thrown out of its retaining notch and the belt shipped from the tight to the loose pulley, the loom would run for several picks owing to its great momentum. This difficulty is overcome by the use of the

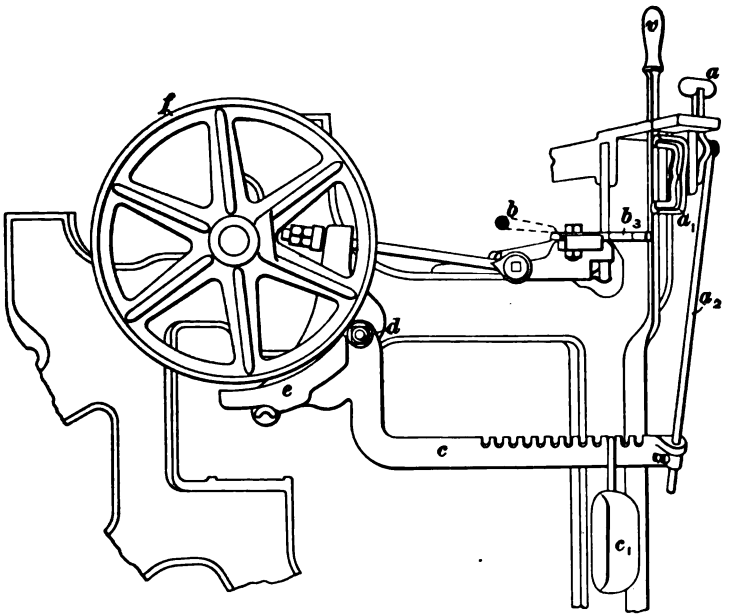

FIG. 22.

brake, which will be found attached to every loom. Fig. 22 shows a common type of this mechanism.

On the ordinary plain loom, the shipper handle is automatically thrown out of its retaining notch under two conditions—when the filling runs out or breaks, and when the shuttle fails to enter either box properly. The manner in which the shipper handle is operated under the former condition has just been explained, and although mention has been made of the manner in which the dagger of the protector motion stops the loom when the shuttle is not boxed properly, this

Digitized by Google

part of the loom should be considered with reference to Fig. 22; *b* shows the dagger, which is also shown in Fig. 15. In case this dagger is not lifted by means of the shuttle pressing the finger of the protector motion outwards, it will engage with the steel bunter in the frog and press the casting b_3 against the shipper handle *v*, thus pushing the shipper handle from its retaining notch and stopping the loom.

In either case, when the shipper handle is released, it springs to the end of its slide, and in doing so operates the mechanism a, a_1 in such a manner as to lower the rod a_2; a, a_1 is a simple crank arrangement so formed that the stud to which the rod a_2 is connected may be readily raised or lowered, thus raising or lowering the rod a_2. As this rod is lowered it allows the weight c_1 to force the rod *c* downwards, which, being pivoted at *d* and carrying the brake *e*, will force the latter against the brake wheel *f* on the end of the crank-shaft. When the belt is again shipped to the tight pulley by means of the shipper handle *v*, the entire mechanism is automatically restored to its original position, leaving the loom free to operate. In case it is desired to turn the crank-shaft by hand, the brake wheel may be relieved of the action of the brake by simply moving the handle *a*.

LOOM TEMPLES

35. The object of a pair of **temples** is to hold the cloth out as wide as possible during the process of weaving, and also to prevent the warp being drawn in or condensed at any part by the drag of the filling. The strain on the warp is so great that it is impossible to keep the cloth at the temple as wide as the space occupied in the reed. Good temples will, however, keep the cloth as near this width as is necessary. They are made in a variety of ways, but the temple consisting of a trough and roller is the most common.

Fig. 23 shows a sketch of a temple very largely in use, and Fig. 24 shows its parts; *a* is the base plate, which is screwed to the breast beam of the loom. To this are screwed the

Digitized by Google

stand a_1 and cap a_2, which contain a spiral spring. The part b has a long shank that is enclosed in a_1, a_2. The shank works inside the spring, being provided with a shoulder to keep the spring in its place. The parts b_1, c enclose the roll d. A spindle passes through the roll and holds it in position, at the same time allowing it to revolve freely. This roll is usually made of wood, with small pins set in such a manner that they incline toward the edge of the cloth. The cloth in being woven passes between the part c and the roll d; consequently, as the cloth is wound down it turns the roll d, and is

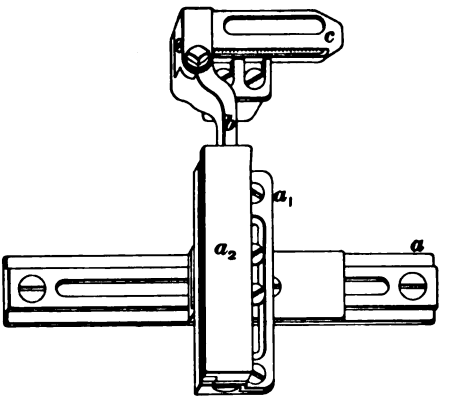

FIG. 23

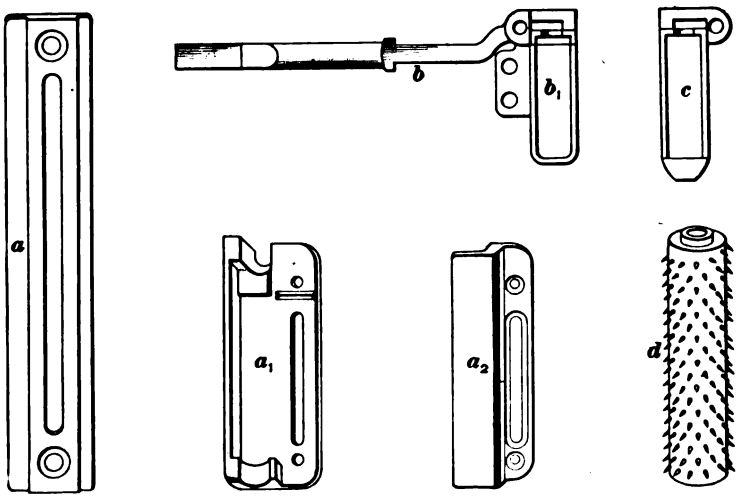

FIG. 24

distended to its full width through the inclination of the small pins.

Digitized by Google

SHUTTLE GUARD

36. Serious accidents sometimes occur in the weave room, due to the shuttles flying out of the loom. To prevent this as much as possible, there is fastened to the reed cap a device known as the **shuttle guard.** It consists, generally, of a wire rod k_1, Fig. 12, extending across the front of the reed cap and projecting over that part of the race plate on which the shuttle travels, so that if the shuttle rises it will strike this rod, and either be turned into the yarn again or run over the yarn until it strikes the opposite box.

This rod makes it inconvenient for the weaver to draw in broken ends through the reed; consequently, some loom builders provide their looms with a wire rod or metal strip that can be turned up and laid flat against the reed cap, thus putting it out of the way of the weaver when drawing in ends. The weaver puts it in place again before starting the loom.

LEASE RODS

37. Between the harnesses and the whip roll of the loom are placed what are known as the **lease rods.** The object of these rods is to separate the ends so as to prevent any entangling that might otherwise result. They also enable the weaver to piece up broken ends.

Lease rods are of two sizes, the smaller being placed in front. They are made of material that will stand the friction of the ends without having a groove cut in them, usually being made of tin, or of wood covered with varnish or black enamel.

PULLEYS

38. There are two kinds of driving **pulleys** in common use on looms today; namely, the **tight-and-loose pulleys,** where the belt is shifted from one to the other, and the **friction pulley.** The tight-and-loose pulleys are found mostly on the plain loom, since they are the least expensive

Digitized by Google

and are more easily kept in repair, and for cotton looms on light and medium goods answer the purpose.

The friction pulley is more commonly found on heavy work, since it more readily imparts the speed to the loom; while with the tight-and-loose pulley at least one pick must be run before the loom will reach its full speed. Looms may be belted from above or from below.

39. Power Necessary to Drive a Loom.—The power to drive a loom is variously estimated at from $\frac{1}{8}$ to $\frac{1}{2}$ horsepower. A very wide loom weaving coarse goods, necessitating the use of a large shuttle and great tension on the warp, absorbs more power than a narrow loom on light goods. Looms equipped with dobbies or box motions absorb more power than plain looms.

Tests made have resulted as follows: Plain looms 30 inches wide on goods of light sley and pick, yarns averaging 70s, were operated with $\frac{1}{7}$ horsepower; 30-inch looms running 150 picks per minute on heavy goods, absorbed $\frac{1}{3}$ horsepower; 30-inch looms on standard drills running 180 picks per minute, averaged three and one-half looms to a horsepower. For general purposes about four looms to 1 horsepower is a safe estimate.

40. Space Occupied.—The space occupied by a 40-inch loom is $7' 7\frac{1}{2}'' \times 3' 8''$. This is for a loom that has a lay $87\frac{1}{2}$ inches over all, a reed space of 48 inches, and will weave 44-inch cloth.

CALCULATIONS

41. There are but few calculations required in connection with the plain loom. The first is regarding the speed of the loom. This is always figured in picks per minute, and corresponds in almost every loom to the number of revolutions that the crank-shaft makes per minute.

The crank-shaft in most looms carries the driving pulley, which receives motion from the weave-room shaft, and, consequently, if the revolutions of the crank-shaft are obtained, the answer gives the number of picks per minute.

Digitized by Google

The principal calculation in connection with the plain loom is with regard to the take-up motion. The picks per inch that are inserted in the cloth depend on the rate at which the sand roll is driven forwards, taking up the cloth as it is woven. There are innumerable styles of take-up motions, although in general principles they are almost all alike, the difference being in the number of gears and in the diameters of sand rolls.

To determine the driving and driven gears of the take-up motion when calculating the change gear, always commence with the sand roll, which in all cases is considered as a driver. To find the change gear to give the number of picks required when it is a driver, apply the following rule:

Rule I.—*Multiply the driven gears together, and divide by the drivers, circumference in inches of sand roll, and picks per inch required.*

To find the change gear when it is a driven, apply rule II:

Rule II.—*Multiply the driving gears, circumference in inches of sand roll, and picks required together, and divide the result by the driven gears.*

To find the constant of a take-up motion, apply rule III:

Rule III.—*Multiply the driven gears together, and divide by the drivers and circumference in inches of sand roll, leaving change gear and picks per inch out of the calculations.*

When the change gear is a driver, the constant will be divided by the picks per inch to obtain the change gear.

When the change gear is a driven, the picks per inch required will be divided by the constant, in order to obtain the change gear.

In obtaining the change gear for a take-up motion, a certain percentage is generally taken from the actual measurement of the sand roll to allow for any contraction that takes place in the length of the cloth after it is taken from the loom. About 2 per cent. will cover all cases, although different builders allow different rates.

In figuring the change gear for a loom, it is always necessary to notice what part of the loom is working the pawl

Digitized by Google

that drives the ratchet wheel. It will be remembered that the cam-shaft revolves only once while two picks are being placed in the cloth; consequently, if the take-up motion is driven from the cam-shaft, it will operate but once in two picks. On this account, it is necessary when figuring change gears that are driven from the cam-shaft, to multiply the number of teeth in the ratchet wheel by 2.

When the take-up motion is driven by any part of the loom that operates every pick, such as the lay sword, the ratchet wheel is figured with its exact number of teeth.

EXAMPLE 1.—Find the change gear necessary to give 64 picks per inch with the take-up motion shown in Figs. 19 and 20, considering g_4 as the change gear.

SOLUTION.—The ratchet gear g_1 is driven from the cam-shaft and, consequently, will be considered as a gear of double the number of teeth that it actually contains. Deducting 2 per cent. from the circumference of the sand roll gives 14.21 as the circumference to be used when figuring for the change gear. The change gear g_4 is a driver; therefore, applying rule I,

$$\frac{48 \times 27 \times 200}{14.21 \times 16 \times 64} = 18\text{-tooth change gear.} \quad \text{Ans.}$$

EXAMPLE 2.—Find the change gear necessary to give 56 picks with the take-up motion illustrated in Fig. 20, considering the gear g_3 as the change gear.

SOLUTION.—The change gear g_3 is a driven gear; therefore, applying rule II,

$$\frac{16 \times 16 \times 14.21 \times 56}{48 \times 200} = 21\text{-tooth gear necessary.} \quad \text{Ans.}$$

EXAMPLE 3.—Find the constant for the take-up motion illustrated in Fig. 20, considering the gear g_3 as the change gear.

SOLUTION.—Applying rule III,

$$\frac{48 \times 200}{14.21 \times 16 \times 16} = 2.639, \text{ constant.} \quad \text{Ans.}$$

42. To find the production of a loom, apply the following rule:

Rule.—*Multiply the number of picks per minute of the loom by the number of minutes in 1 hour and by the number of hours, and divide by the number of picks per inch being inserted in the*

Digitized by Google

cloth, and then by the number of inches in a yard. Deduct from this an allowance for stoppages.

The allowance for stoppages varies according to the class of goods being woven, but it is usually assumed that 10 per cent. is sufficient on ordinary plain cloth.

EXAMPLE.—A loom runs 180 picks per minute, 58 hours per week, and the cloth contains 64 picks per inch. The loom runs 90 per cent. of the possible time. Find the number of yards produced in a week.

SOLUTION.— 180 picks per min. × 60 (min. in hr.) = 10,800 picks per hr. 10,800 picks × 58 (hr. per wk.) = 626,400 picks per wk.
626,400 ÷ 64 (picks per in.) = 9,787.5 in. per wk.
9,787.50 ÷ 36 (in. in 1 yd.) = 271.87 yd. per wk.
90 per cent. of 271.87 = 244.6830 yd. Ans.

Digitized by Google

FIXING LOOMS

DEFINITIONS

1. There are several terms applied to a loom and its parts which will be frequently used, and consequently should be defined so that the student may fully understand their application.

If, when facing the front of a loom, the shipper handle is at a person's right, it is said to be a **right-hand loom.** If the shipper handle is at the person's left, it is a **left-hand loom.**

To determine whether a shuttle is right- or left-hand, hold the shuttle with the top, which carries the larger opening, upwards and the heel pointing toward the person. If, when in this position, the eye of the shuttle is on the person's right, it is a **left-hand shuttle;** if on the person's left, it is a **right-hand shuttle.** Right-hand shuttles are run in right-hand looms, and left-hand shuttles in left-hand looms.

By the term **heel** of the shuttle is meant that end which does not contain the eye.

The different parts of a loom are all set with relation to the position of the crank-shaft, which is variously spoken of as being on its **top, bottom, front,** or **back center,** according to whether the crank on this shaft is at its highest, lowest, front, or back position, respectively.

The expression *turn the loom over*, or *pick the loom over*, a certain number of picks, is frequently met with in the mill and implies turning the crank-shaft one or more revolutions, as may be indicated.

For notice of copyright, see page immediately following the title page

Digitized by Google

ERECTING AND STARTING LOOMS

2. In setting up new looms, care should be taken to have them perfectly square with the line shaft. To accomplish this, drop a plumb-line from two points on the line shaft, and from the points where the plumb-bob touches the floor measure out the distance that the looms are to be placed. This gives two points equally distant from the line shaft. Between these two points stretch a chalked line; raise this line at the center, and then let it drop. This will produce a mark on the floor perfectly parallel with the line shaft. The looms are then set with their feet just touching this line. A spirit level should next be placed on the breast beam and loom sides, in order to ascertain if the looms are level. If they are not, they should be made so by placing packing under the loom feet. After this has been accomplished, the looms should be firmly fastened to the floor.

The loom is now ready for the belt. In order to obtain the length of belt required, pass a line around the pulley on the line shaft, and also around the pulley on the loom. Cut the line to the exact length; then lay it on the floor and cut the belt to correspond with the line. It should be remembered that belts will stretch after being run a short time; consequently, they should be cut from 1 to 2 inches short, according to their length.

3. The best way to fasten loom belts is by means of belt clasps, since when fastened in this manner they wear longer and give better satisfaction. Care should be taken in putting on a clasp to prevent its being flattened. The belt should be hammered and not the clasp. It is also a good plan to place a piece of leather or wood on the belt when fastening the clasp. This will prevent any turning of the points.

Digitized by Google

4. The loom should be run for some time without the warp, but with all the parts set and with the reed and shuttle in position; during this limbering up the loom should be thoroughly oiled, much more frequently than during the ordinary running of a loom.

TYING IN WARPS

5. When the warp is brought to the loom, the beam is placed in the supports at the back. The warp yarn, together with the harnesses and the reed, is then passed over the whip roll to the center of the loom, and the harnesses connected at the top to the straps attached to the top rolls, and at the bottom to the jack-straps that connect them with the treadles, although the latter may be done after the warp has been tied in. The reed is then fixed in the lay, where a groove has been cut to receive it, and the lay cap, which also contains a groove and fits upon the top of the reed, is then fixed in position.

A piece of cloth known as the **apron**, and which should be the same width as the cloth to be woven, is passed around the sand roll and carried over the breast beam. Bunches of the warp yarn are then taken and tied to the apron, which should be torn in strips at this end. Care must be taken that all the ends of the warp are drawn at an equal tension before being tied to the apron. The warp is then loosened and *turned down* by turning either the sand roll or the ratchet gear by hand. A few picks of filling are then placed in the warp in order to tie the ends.

It is necessary to perform the operation of tying in a warp as just described each time that an old warp is replaced by a new one, but on a new loom a number of additional operations are necessary, known as settings.

Digitized by Google

SETTINGS

REGULATING THE SIZE OF SHED

6. The **size of shed** is, of course, largely dependent on the throw of the harness cams, and this point is dependent on the class of goods that it is intended to run, and is generally decided on before the looms are ordered. However, the size of the shed may also be regulated, to a certain extent, by means of changing the point at which the jack-strap is connected to the treadle, since the farther this point is from the fulcrum on which the treadle rests, the greater is the distance through which it will be moved, and as a result the size of the shed will be increased.

A good rule to follow when regulating the size of the shed, is to have the shed large enough to clear the shuttle, by, say, about $\frac{1}{8}$ inch. In some cases, however, when the work is light and there are no loose fibers in the yarn, it will be found to be an advantage to reduce the size of the shed, the chafing due to the shuttle rubbing against the yarn being more than compensated for by the fact that less strain will be placed on the yarn, due to the harnesses not lifting so high.

SETTING HARNESS CAMS

7. When **setting the harness cams** for ordinary work, in order to have them move the harnesses in the correct manner, turn the crank-shaft until it is on its bottom center; then turn the harness cams on the cam-shaft until the treadles are exactly level. Fasten the setscrew in the cams when the loom is in this position. This will bring the harnesses level when the reed is about $2\frac{1}{2}$ inches from the fell of the cloth. It should be noticed that this is for ordinary setting of the harness cams.

If the harness cams are set so that the harnesses will be level before the reed reaches this point, that is, before the crank-shaft reaches its bottom center, the harnesses are said to be **set early**; on the other hand, if the harnesses do not

Digitized by Google

become level until the crank-shaft has passed its bottom center, the harnesses are said to be **set late.**

The crank-shaft should next be turned until it is on its back center; the lay will then be in its backward position and the harnesses should be open to their fullest extent. When in this position the yarn that forms the bottom shed should just clear the race plate of the lay. If the yarn presses on the race plate it will be chafed, and breakage of the ends will result. On the other hand, if the yarn is too high, it is liable to give the shuttle an upward tendency as it enters the shed, which often results in the shuttle either being thrown from the loom or not passing straight from one box to the other; in fact, it will result in a number of faults, which will make both bad cloth and low production. The position of the yarn when the harnesses are open can be regulated by raising or lowering the harnesses by means of the strap connections.

The crank-shaft should next be turned over one pick. This will bring the yarn, which formerly formed the top shed, at the bottom. This bottom shed should be regulated in the same manner as the previous one.

8. Different Settings of Harness Cams.— It has been stated that, for ordinary setting of the harness cams, the crank-shaft should be on the bottom center when the harnesses are level. It has also been stated that this would bring the harnesses level when the reed is about $2\frac{1}{2}$ inches from the fell of the cloth; that is, the top and bottom sheds would close over the picks of filling when they were required to be pushed $2\frac{1}{2}$ inches in order to form part of the cloth. This means that if the cloth was being woven with 64 picks to the inch and the loom set in this manner, each warp end in moving the $2\frac{1}{2}$ inches would be chafed by the pushing up of $64 \times 2\frac{1}{2}$ (or 160) picks of filling after the sheds have crossed over them. This chafing of the warp ends would raise the fibers of the cotton and give to the cloth a well-covered appearance, which would be lacking if the cams were set late.

Digitized by Google

It can readily be seen that if the cams were set earlier and the harnesses were made to change when the reed was about 3 inches from the fell of the cloth, a greater chafing of the warp would result; consequently, more of the fibers would be raised and more covering produced. On the other hand, if the harness cams were set later, the opposite effect would be produced and the cloth would have a bare appearance.

Some warps are so tender that, in order to weave them at all, they must be favored to every possible extent. When this is the case, the harness cams should be set so that the warp ends will be chafed as little as possible.

LEASE RODS

9. The object of the **lease rods** is to retain the lease of the warp ends. This is necessary in order to keep the ends from becoming tangled, and also to enable the weaver to readily piece up any broken ends. To lease a plain warp, turn the crank-shaft until the back harness is up; then place the larger of the two lease rods in the shed that is formed back of the harnesses. Next turn the crank-shaft over until the front harness is raised, and place the other rod in this shed.

Although the lease rods may appear to be insignificant, they play an important part in the running of a loom. With very little thought it will be seen that when the front harness is up and the back harness down, the warp ends will open up from a point between the two lease rods; but when the position of the harnesses is reversed, the warp ends will open up from a point in front of the front lease rod. Thus it will be noticed that it would be impossible to produce as large a shed when the yarn is opening from a point in front of the lease rods without producing more strain on the yarn. To overcome this difficulty, the dimensions of the front lease rod should be as small as possible; then, by regulating the leverage of the treadles, the difference in the size of the sheds may be made almost imperceptible.

Digitized by Google

EFFECT OF POSITION OF WARP LINE

10. The **warp line** may be defined as an imaginary line drawn from the top of the whip roll to the top of the breast beam and passing through the shed when open. This will be seen by reference to Fig. 1, where *a* represents the whip roll; *b*, the breast beam; *f c e*, the line of the top shed; *f d e*, the line of the bottom shed; and *a b*, the warp line.

The position that the warp line *a b* assumes forms an important point in the production of cloth on which there is to be more or less cover. In Fig. 1, the warp line *a b* forms the line *a e f b* of the warp yarn; in other words, when the harnesses are open, the warp line passes through the center

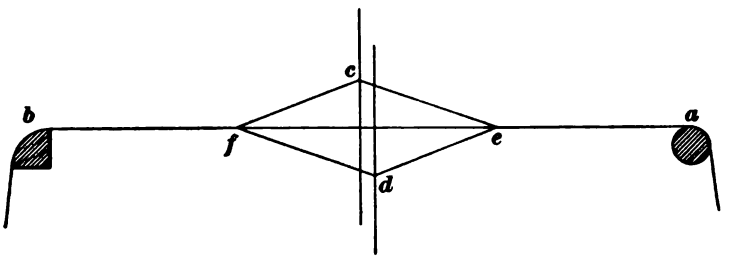

FIG. 1

of the shed; consequently, when the shed is open, as shown in this figure, there will be an equal strain on both sets of warp threads, since both harnesses move an equal distance from the point at which they become level.

When the warp line occupies this position, it generally results in the cloth having a hard, *reedy* appearance; that is, the warp ends have the appearance of being laid in the cloth in pairs, since two ends will be close together and a space between these and the next two. This appearance of the cloth is sometimes desired, though, as a rule, it is generally considered a defect.

Fig. 2 is an illustration of the warp line when in a different position. In this instance, the whip roll and the breast beam have been raised, and it will be seen that the warp line *a b* passes through the upper half of the shed. This will result

Digitized by Google

in the yarn in the top shed being more slack than the yarn in the bottom shed. Then, as the pick of filling is beaten up by the reed, it will spread the yarn that forms the top shed between the ends that form the bottom shed. This will tend to give the cloth an even appearance, and will remedy the faults that have been spoken of in connection with the warp line running through the center of the shed.

It should be noted in this connection that as the whip roll and breast beam are raised, the strain on the yarn of the bottom shed will be correspondingly increased; consequently, in setting a loom to obtain a cloth that will have a full appearance, it is necessary to consider the

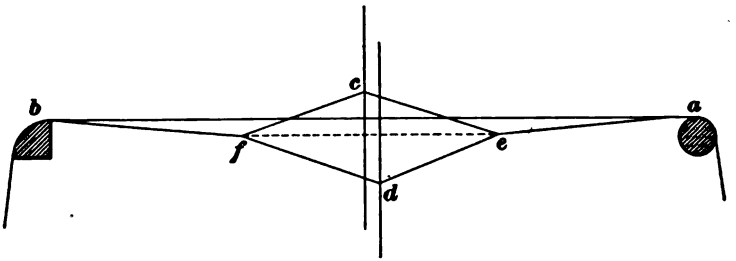

FIG. 2

strength of the warp yarn. If the warp is tender, it is best to set the whip roll and breast beam in such a manner that the warp line will pass through the center of the shed. This will cause the top and bottom lines of the shed to be raised and lowered equally, and will produce the least strain possible.

It may be stated that any setting of the loom to produce cover or a full appearance in the cloth, puts a greater strain on the warp ends, and in setting a loom to give either of these results, care should be taken not to go to such an extreme that the advantages gained in one direction will be lost in another.

Digitized by Google

SETTING PICKING CAMS

11. Picking cams are now generally made in two parts—the **picking cam** proper and the **picking-cam point,** which is fastened to the picking cam by means of bolts. The picking-cam point is the part that comes in contact with the pick cone, and is made separate, since it is more convenient to replace only this part as it wears out than it would be to replace the whole picking cam. This method of construction also saves considerable expense.

In placing the picking cam on the cam-shaft, it should be in such a position that it will come in contact with a point about midway of the length of the pick cone; then, if any further adjustment is necessary, it may be moved either way.

12. To **set a picking cam,** turn the crank-shaft until it is on its top center; then set the picking cam so that it will just start to move the picker stick. Turn the crank-shaft until it is on its top center again, when the pick cam on the other side of the loom should be set in the same manner.

If the student remembers that the crank-shaft revolves twice while the cam-shaft is revolving once, it will readily be understood that one pick cam will operate on one pick, and the other on the next, as the cam-shaft revolves only once every two picks.

13. Some fixers think that the harness cam that is pressing down the harness should be the one nearest the picking cam operating that pick; that is, if the right-hand cam is pressing down the harness, the picking cams should be set so that the loom will pick from the right-hand side. This is merely a notion, as it is immaterial from which side the loom is picking.

If the picking cams are set so that the point of the cam starts to raise the pick cone before the crank-shaft reaches its top center, the loom is said to be **picking early.** On the other hand, if the picking cam does not start the pick cone until the crank-shaft has passed its top center, the loom is said to be **picking late.**

Digitized by Google

SETTING THE LUG STRAP

14. On the lug strap that is around the picker stick, there is usually placed a small strip of leather, which is fastened to the picker stick by means of a screw. This serves to hold the lug strap in position. By lowering or raising this lug strap, more or less power is given to the pick; that is, if the lug strap is raised on the picker stick there will be less power, and if it is lowered the opposite effect will be the result.

Power is a term that in this instance refers to the force that the picking cam imparts to the shuttle. It is the object of every good fixer to run his looms with as little power as possible.

A good setting for the lug strap is to have it in such a position that the lug strap which is connected to the picker stick will be on a level with the lug strap connected to the picking-shaft arm. If possible, the lug strap connected with the picker stick should never be on a lower level than the rest of the connections, since when in this position it has a tendency to slide up on the picker stick, due to the force coming from above the point where it is connected. This is very liable to result in a weak pick and the shuttle not receiving sufficient power to reach the opposite box.

In placing lug straps on a loom, care should be taken that they have a little play. Under no condition should they be tight when the picker stick is at rest at the outer end of the box. When the picker stick is brought back to its extreme position against the back end of the box, it should strike against a strip of leather placed in the slot. This prevents the stick being damaged, which would be the case if the iron end of the box were not protected. The distance that the picker stick travels in moving from the back to the front of the box, or the **sweep** of the picker stick, can be regulated by taking up or letting out the lug straps.

Digitized by Google

STARTING PICKERS

15. When placing pickers on the picker stick, the part that rests on the bottom of the box is generally cut in such a manner that, if the picker is held perpendicular, this part will slant upwards toward that side of the picker which comes in contact with the picker stick. It will be seen that by doing this the under side of the picker will be parallel with the bottom of the box when the picker stick is starting to deliver the shuttle.

To place a picker on the picker stick, have the picker stick at its backward throw, and place the picker so that its under side will just clear the bottom of the box. Bring the shuttle up hard against the picker so as to mark it. Where this mark comes on the picker, cut a small circular hole for the reception of the shuttle point. Next fasten the picker by means of the loop, or collar, that passes around the picker and that is fastened to the picker stick by either tacks or screws. Bring the picker stick forwards to the limit of its throw, and notice where the hole in the picker comes in relation to the point of the shuttle. Under no conditions should it be lower, since this would have a tendency to raise that point of the shuttle which first enters the shed, thereby resulting in the shuttle being thrown out, or at least in its going crooked.

16. It is generally the practice to have the hole in the picker, when the picker stick is at the limit of its forward throw, a little higher (say about $\frac{1}{16}$ inch) than that point of the shuttle with which the picker is in contact. This will slightly depress the forward end of the shuttle, or the end first entering the shed, and consequently render the shuttle less liable to fly out.

If, when trying the picker, it is found to be too low, it may be regulated by placing a very thin strip of leather between the front side of the picker stick and the top part of the clasp through which the bolt that fastens the picker stick to the parallel motion passes. Some looms are provided with a

Digitized by Google

setscrew that contains a check-nut, this setscrew being fastened to the rocker of the parallel motion. By means of this, the picker may be adjusted to its proper height with respect to the point of the shuttle.

Considerable care should be exercised in the setting of pickers, particularly after they have been worn a great deal by the point of the shuttle striking them; if they are not set right, they will throw the shuttle crooked. If the shuttle for any cause is being thrown in this manner, it will generally be noticed by means of a clicking sound, which is due to the shuttle striking the side of the opposite box as it enters it.

It will be remembered that a slot is cut in the bottom of the shuttle box, in which the picker stick moves while delivering the shuttle. At the forward end of this slot, or the end nearer the loom, thick strips of leather are placed. These form what are known as bunters, and serve as cushions for the picker stick as it is brought forwards.

STARTING PICKER STICKS

17. In setting the **picker stick** with regard to the length of the sweep, turn the crank-shaft until the picker stick is brought to the forward end of its stroke; when in this position, it should be from 1 to 2 inches from the bunter. It should never have so much sweep that it will be brought in contact with the bunter while the picking cam is in contact with the pick cone, since under such conditions the picker stick is very apt to be split.

SETTING BINDERS AND BINDER STRAPS

18. The shuttle being sent with such force from one side of the loom to the other, some arrangement must be provided by means of which it can be checked gradually instead of being brought to an abrupt stop, since if this is not done, not only will the picker and picker stick wear out much more quickly, but what is to be still more avoided, the shuttle in striking the picker will rebound, thus leaving some

Digitized by Google

space between the picker and shuttle. Then as the picker stick is brought forwards to again drive the shuttle across the loom, it will have to move some distance before bringing the picker in contact with the shuttle. As a result, the force of the blow will be greatly lessened, and the shuttle will probably not reach the opposite box in time to prevent the warp yarn closing on it. The **binder** and other appliances attached to the boxes of the loom serve to hold the tip of the shuttle in actual contact with the picker while the shuttle is in the box.

19. It is the object of all good loom fixers to have their looms set in such a manner that the least possible wear will be brought upon the different parts. To accomplish this, the least power that will send the shuttle across the loom and into the opposite box should always be sought. It can readily be understood that the tighter the shuttle boxes are made, the more force will be required to drive the shuttles into them; consequently, all boxes should be set so that they will no more than *check* the shuttle and at the same time retain it in its position after it has fully entered the box.

Many different methods of setting the binder are advocated, the one aim being to set it in such a manner that the shuttle on entering the box will receive a uniform and gradual check. In order to procure this, the shuttle should commence to press against the binder only when its widest part comes in contact with that part of the binder that projects into the box. It should then steadily press out the binder until that part of the shuttle which first came in contact with the binder has reached the other end of the projection on the binder. When set in this manner the binder will present the full face of its curvature to the side of the shuttle when the shuttle is at rest in the box.

20. It will be noticed that the shuttle may, in some cases, strike the binder with sufficient force to throw the finger out with such suddenness that it will not act as a check after the shuttle has once come in contact with the binder. To

Digitized by Google

prevent this, a strip of leather known as the **binder strap** is placed around the finger.

To attach the binder strap to the loom, have the shuttle in the box so that the binder will be at its outward limit; then stretch the binder strap of leather over the finger, drawing it tight and fastening it with screws. In case the binder is placed at the front of the box, a casting is placed on the protector rod to serve the purpose of the binder strap.

STARTING SHUTTLES

21. The regulating of the **shuttles** forms an important part of the fixer's duties. In all cases, a weaver should have at least two shuttles for each loom, so that when the filling in one shuttle runs out, a full one will be ready with which to replace the empty one. It is necessary, therefore, to have the shuttles that are to run in the same loom exactly alike, both in regard to their size and weight. If this is not attended to, the power suitable to carry one will not be right for the other.

22. In starting a new pair of shuttles a pair of calipers should be run the length of each shuttle to make sure that they are of an exact size. They should also be weighed in order to ascertain that their weights are alike. After shuttles have been running for some time they will become worn, and consequently their size and weight will not remain the same; then when the shuttle box has been set for one shuttle it will not be found to work correctly with the other. To overcome this it is necessary to frequently true the shuttles. In truing shuttles some fixers use a plane; others rub the shuttles on a strip of coarse sandpaper, which may be tacked to the bench. Either method will answer the purpose.

23. A cause of considerable trouble is the liability of the shuttles to accumulate dirt on their sides, thus causing them to stick as they enter or leave the boxes; consequently, they should always be carefully looked after in order to do away with this evil. This more properly comes under the

Digitized by Google

weaver's than the fixer's duties, although such things are often left for the latter to attend to.

24. Generally a small piece of flannel, known as **friction flannel,** is tacked to the shuttle at that part of the eye where the filling first enters it. This serves to keep the filling at a certain tension while running out of the shuttles.

25. Care should be taken that the reed is exactly in line with the back of the shuttle boxes. If it projects beyond this part, the shuttle in striking it will be turned from its true course.

The race plate should also be on an exact level with the bottom of the shuttle boxes, any other position being detrimental to a satisfactory running of the shuttle in its flight from one box to the other. In order to ascertain whether the race plate is set in this manner, place a straightedge in either box, having it rest on the bottom. When in this position, see that its whole edge is in contact with the race plate and the bottom of the box.

SETTING THE PROTECTOR MOTION

26. To set the **protector motion,** have the shuttle out of the box; then adjust the fingers at the back of the boxes in such a manner that they will press against the binders; bring the lay forwards and see that the dagger engages with the bunter on the frog. Next insert the shuttle in the box and see that the dagger clears the bunter, by about $\frac{1}{4}$ inch, when the lay is brought forwards. If there is not the proper space between the dagger and the bunter when the shuttle is in the box, the sides of the boxes will have to be adjusted in order that the shuttle when in the box will press the binder out sufficiently far to cause the finger to give the dagger the correct elevation.

The protector should be well oiled and work quite freely, since if there is any inclination on its part to stick, it is liable at any time to fail to knock off the loom when the shuttle is trapped in the shed.

Digitized by Google

FILLING STOP-MOTION

27. To set the **filling stop-motion,** have the shuttle on the filling-fork side of the loom; this is, in almost all cases on modern looms, the side on which is placed the shipper handle; then bring the lay up to the full throw of the crank, so that it is on its front center. When the loom is in this position, turn the filling-fork cam on the cam-shaft until its point is just commencing to raise the lever on which it acts. Notice the position of the finger of this lever in relation to the back end of the filling fork. There should be a space of about $\frac{1}{4}$ inch between them.

The filling fork is, at times, the cause of considerable trouble. It should be carefully balanced on the pin that supports it, the back end being just a trifle heavier than the forward end. The prongs should be bent in such a manner that they will just project through the grid when the lay is at the farthest throw forwards. Care should also be taken that the prongs of the fork come in contact with no part of the lay or grid during its operation.

TEMPLES

28. There is not much that would be considered difficult in setting the **temples** of a loom, the principal points being to note that they hold the cloth out to a sufficient width to prevent the breaking of the selvage ends. It is well understood that the yarn is somewhat wider when in the reed than it is after it has become cloth; consequently, as the lay is brought forwards in beating up the filling, considerable strain is brought upon the selvage ends. The temples should be set as near the fell of the cloth as possible without interfering with the yarn, so that they will relieve the selvage ends as much as possible.

Care should be taken that the bar of the temple does not come in contact with the race plate of the loom, although on plain work the bar is generally set as near as possible to the race plate.

Digitized by Google

The temple should also be prevented from coming in contact with the reed. To prevent this, the temple is provided with a **heel**, which the lay of the loom strikes when coming forwards, and pushes back. It is not considered necessary that the temple in being thus pushed back should move through more than $\frac{1}{4}$ inch.

Temples should always be kept well oiled so that the rollers will work freely.

LET-OFF AND TAKE-UP MOTIONS

29. In regulating the **let-off** and **take-up motions**, care should always be taken to have the warp tight enough to prevent any slack cloth on the breast beam. When watching a loom running, it will sometimes be noticed that the lay, in beating up the filling, will cause considerable slack in the cloth when the reed comes in contact with the fell. When this is the case, weight should be added to the **let-off motion.**

30. In setting the **take-up motion,** be sure that the take-up pawl acts on only one tooth of the ratchet wheel at a time. If the pawl takes up one tooth of the ratchet wheel for a number of picks and then acts on two teeth, bad cloth is sure to result. A good rule to follow in setting the pawls is to turn the loom until the take-up pawl is at its full forward throw; then set the stop-pawl so that it will rest in a tooth at a point that is about half the depth of that tooth. If, after having done this, the pawls do not work properly, the gears will have to be adjusted.

Digitized by Google

KEEPING THE LOOM IN GOOD RUNNING CONDITION

31. The settings of the loom that have just been described have been given in relation to the starting of a new loom and are more or less permanent; consequently, they do not have to be attended to again until parts of the loom have become misplaced or worn, unless widely different styles of goods are to be woven that require the parts to be set differently.

However, after a loom has been running some time, many things combine to throw it out of order, and the fixer very soon has new problems to contend with. It would be well to consider what action of the loom has the most to do with this, and point out what method is best to adopt to reduce the liability of breakages to a minimum.

32. Probably no part of a power loom is so hard to understand, and consequently so hard to keep in good running order, as the pick. To procure a good, smooth-running pick necessitates so many different parts of the loom being regulated that the fixer will very often overlook the one vital point.

A very great strain, together with considerable wear, is brought on the loom on account of the picking movement. Shuttles, pickers, straps, and all other parts connected with it are constantly wearing out or breaking; and if the best of care is not taken, the cost for these supplies will soon surpass the allotted amount. Much of this is caused by the harshness of the pick, and consequently the easier this can be accomplished, the better it will be for the fixer, as well as the manufacturer. But even when all that is possible has been done, there will be considerable wear and tear that it will be impossible to overcome.

Digitized by Google

33. The picker stick in delivering the shuttle, in addition to supplying force enough to send the shuttle across the loom, is also obliged to overcome the resistance of the binder pressing against the side of the shuttle. As soon as the shuttle leaves the box, this additional strain is removed, and, consequently, the power that has been exerted in pushing the shuttle from the box will now be applied to some other part of the loom. As a result, the other moving parts of the loom will have a tendency to jump forwards, on the same principle that a body having a force acting on it, but restrained by friction, will move rapidly in the direction of the force applied if that friction is suddenly removed. This is known as the **reaction** of the loom, and it can easily be seen that the more of a drag there is to the pick, the greater will be this reaction, and consequently the greater will be the wear and tear, not only on the parts of the loom in direct connection with the picking motion, but in fact on all the parts of the loom.

It can readily be understood that the less pressure that is brought to bear on the shuttle while in the box, the better it will be for the loom; but, at the same time another point should be considered, namely, that there always must be sufficient pressure to prevent the shuttle rebounding when it strikes the picker in entering the box. This leads to the consideration of another point, namely, the *power of the pick.*

34. The first requirement of the picking motion may be said to be the sending of the shuttle through the shed in a very short period of time. Next, it must give to the shuttle sufficient power to enable it to enter the box. Thus it will be seen that these two features of fixing—setting the boxes and regulating the pick—may be said to act one upon the other; for the tighter the box, the stronger must be the pick; and the stronger the pick, the tighter must be the box. In regulating the pick, it should be the aim of every fixer to give it just sufficient power to do its work and no more; then the tension of the box should be regulated to correspond with the power of the pick.

Digitized by Google

35. In every case when the shuttle fails to reach the opposite box, whether on account of its meeting with some obstruction or on account of its not receiving sufficient force from the picker stick, the dagger on the protector rod engages with the frog and the loom is stopped. This is known as **banging off,** and it can be seen that the suddenness with which the loom is checked will necessarily bring considerable strain on the different parts. In some cases, the momentum of the loom is so great and the shock so severe that the teeth in the gear on the end of the shafts will be broken, owing to the tendency of the gear to revolve after the loom is stopped; or, in other cases, the lay swords may be broken.

The liability of such things happening may, however, be greatly lessened by carefully setting the different parts. The teeth in the gears on the crank- and cam-shafts should be sufficiently geared into each other, since if the teeth merely touch each other at their points, the concussion due to the sudden stopping of the loom will be much more liable to cause breakage than would be the case if the teeth were properly geared.

36. When the loom is stopped by the dagger, the shipper is pushed from its retaining notch, throwing the belt from the tight to the loose pulley and applying the brake. It is always well to keep this part of the loom set exact; for the sooner the belt is removed from the fast to the loose pulley and the brake brought to bear on the brake wheel, the more quickly is the loom relieved of its momentum, and, consequently, the less violent will be the concussion of the parts. In fact, if these parts are properly adjusted, when a loom is running at a fair speed, the belt is actually on the loose pulley and the brake practically in full operation, by the time any concussion takes place in the various parts, so that it is robbed as much as possible of its violence.

37. Thus it will be seen that the loom may be fairly set in motion and left in charge of the weaver—whose duty it is to merely change the shuttles and repair broken yarn—and

Digitized by Google

yet, owing to its reactionary nature, it frequently gets out of order and breaks some of its parts. The fixing of looms is a duty that is peculiar to itself. Each part of a loom has its particular work to do, and yet that part must act in harmony with the loom as a whole. Consequently, to set down any hard and fast rules for the fixing of any one of the difficulties that are sure to confront the fixer, would be absurd. However, by considering those difficulties that are the most frequently met with, and by carefully studying the different circumstances that may cause them, some help may be given to the student.

BANGING OFF

38. About the most frequent difficulty with which a person fixing looms must contend, and one that is probably due to as many different causes as any other, is the shuttle not entering the box in time to prevent the dagger of the protector motion engaging with the frog, and thus causing the loom to **bang off.**

When seeking to remedy this difficulty, turn the crank-shaft and see if the loom is picking properly; that is, if the picker stick starts to move when the crank-shaft is on the top center, the cam may have slipped on the shaft and thus made the loom pick late. Another thing that should be noticed in connection with the pick cam is that, after running some time, its point is very apt to get worn. When it has been so far worn that it will not serve its purpose, it must be taken off and replaced by a new one. The shed should be noted to see if there is sufficient room for the shuttle; since a shed that does not open wide enough will retard the progress of the shuttle.

Next notice the action of the boxes; ascertain, by pushing the shuttle in or out, whether they are too tight. A person easily becomes accustomed to the necessary force required to push the shuttles into the box, so it can readily be told whether this needs changing or not. The shuttles themselves are frequently the cause of this trouble. They should be carefully examined, and, as there are two shuttles to each

Digitized by Google

loom, they should be compared and made exactly alike. Sometimes one shuttle will run without any trouble at all, but when the shuttles are changed there is frequent banging off. The cause then is almost sure to be with the shuttle, although there may be other defects that are so slight that the loom would run were it not for the fact that the defect in the shuttle is acting together with them.

Very frequently some foreign substance will adhere to the sides of the shuttles, causing them to stick as they leave and enter the boxes; this should be noted. Observe the position of the dagger, and see if there is plenty of clearance between it and the frog when the shuttle is in the box. The finger may have slipped on the protector rod, or the binder may not be shaped exactly right to give the required lift to the dagger.

Notice the pickers; sometimes these are either worn or in such a position that they will throw the shuttle crooked, so that it will strike on the sides or top of the opposite box in entering and thus retard its progress. This defect can generally be noticed by a clicking sound, caused by the shuttle as it hits the sides or top of the box.

The driving belt may be too slack, and, consequently, slipping; if this occurs just as the loom starts to pick, it is very apt to bang off. This defect will show itself by a tendency of the loom to slow down at times. This may not be easily noticed by watching the loom run, but by placing the hand on the lay when the loom is in motion, it may be felt whenever it occurs.

The rocker should work freely on the shoe, and care should be taken to prevent its binding in any part of its action. Nothing has been said of bolts breaking and such things as would be so apparent that a novice would notice them.

39. If after all these different parts have been examined and set right the loom still bangs off, more power must be applied; but it must be understood that this is the last

Digitized by Google

resort. Enough has already been said regarding the evils of too much power.

Power may be added to the picking motion in several places; the cam on the cam-shaft may be altered. By sliding this cam toward the framework of the loom, more power is given to the pick; by bringing the cam nearer the center of the loom, less power is given to the pick. Another part of the loom where the power of the pick may be regulated, is the picker stick at the point where the lug strap is connected. By lowering this connection more power is given the pick, and by raising it the opposite effect is obtained. In this connection, however, what has already been said as regards the point of fastening the lug strap to the picker stick, should be carefully observed.

Too much power will result in the loom banging off just as readily as will too little power, since in this case the shuttle, as it strikes the picker, will rebound and thus, as it is being returned by the picker, lose a certain amount of the force that should be given to it, and, consequently, will not reach the opposite box in time to prevent the loom from banging off. Very little practice will enable one to discover this fault by simply watching the shuttle when the loom is running, and noticing whether it comes to rest when it is well in the box and with its tip bearing against the picker. It will be seen that a loose box will also cause the shuttle to rebound.

Thus there are numerous points, any one of which may cause the loom to bang off. Sometimes it is a combination of two or three of these, and then it is that the fixer is obliged to use his best judgment.

SHUTTLES GOING CROOKED AND FLYING OUT

40. If the speed at which the shuttle travels in passing across the lay of the loom is kept in mind, it will not be difficult to understand that any obstruction, however slight, will serve to throw it out of its course, and very probably out of the loom.

Digitized by Google

When looking for the cause of this defect, the shedding of the loom should be carefully considered. It is very important that the bottom shed should not be so high that it will give the point of the shuttle an upward tendency as it is delivered by the picker; also, notice the timing of the harnesses. They should change in time to offer a free shed to the shuttle.

Very often a broken end will become entangled with the other warp ends and cause an obstruction to the passage of the shuttle. When this is the case, it is easily noticed and quickly remedied.

Bring the picker stick forwards and carefully notice the position of the picker in relation to the point of the shuttle. As explained previously, the hole in the picker should be slightly above the point of the shuttle when the picker is delivering.

The position of the reed should be carefully noted. As already stated, it should be perfectly in line with the back of the boxes; for if it should be set a little forwards of this position, it would be sure to give the shuttle an outward tendency. One or more dents protruding into the course of the shuttle will have the same effect.

The position of the race plate in relation to the bottom of the shuttle box should be noted. These should be on exactly the same level. The race plate or lay will sometimes get out of true and must then be leveled. Notice carefully the boxes at the point where the shuttle leaves. Any obstruction here, however slight, is liable to result in the shuttle being deflected.

The different parts of the loom are sure to wear out in time; and when they are so far worn that they can no longer be used without poor results, they should be replaced by new ones. It is a mistake to try to run anything that is worn out on a loom simply for the sake of saving supplies.

Digitized by Google

THIN PLACES IN THE CLOTH

41. Thin places may result when the loom is started after replacing the filling, or they may occur while the loom is running. Those resulting in the first case are so easily remedied that no further mention is necessary here. Reference has already been made to the arrangement on the take-up motion that aids in preventing this. The thin places occurring when the loom is running, however, are an entirely different matter, and are not at all times easily overcome. Sometimes a loom will run for many hours, then make a thin place in the cloth, and then run for an hour or two longer before repeating the defect. This is what may well be called an aggravating case.

When a friction let-off is being used, the cause for this defect is frequently found in the rope that is wound around the beam head. This, at times, will get into such a condition that it will hold the beam tight while a certain amount of cloth is being woven, and will then slip, letting off the warp all at once. In such a case the rope should be thoroughly cleaned of all foreign substances and rubbed with blacklead. If an automatic let-off is being used, the gears should be carefully examined and all the setscrews tightened. The gears of the take-up motion should also be examined. These are very apt to become clogged, and should be thoroughly cleaned. If these different parts are carefully examined, the cause of this defect can generally be removed.

KNOCKING OFF FILLING

42. Knocking off filling is a defect, the cause of which is quite as often found in the spinning as in the weaving. Very frequently the yarn will be spun in such a manner that the cops or bobbins will be so soft or have such a taper that it seems impossible to throw them across the loom without the filling coming off in lumps.

In many cases when the filling is being knocked off, the principal point of the loom to regulate is the pick.

Digitized by Google

Considerable has already been said in regard to the regulation of the pick, and this should be carefully considered in this connection. If the shuttle is being sent across the loom at a high speed and is then suddenly stopped, the filling that it carries on the spindle will have a tendency to leave the spindle; consequently, anything to lessen this blow will also lessen the liability of the filling coming off. As light a pick as will do the required work should be given to the shuttle, and when the shuttle is entering the box it should be checked in as gradual a manner as possible. So much has already been said on this subject that no further remarks are needed here. Frequently, when cop filling is being used, it will be knocked off on account of the spindle of the shuttle not being large enough to firmly retain the cop. When this is the case, a small piece of leather may be placed near the point and between the sides of the spindle, thus enlarging the spindle sufficiently to hold the cop.

KINKS IN THE FILLING

43. Kinks in the filling is usually the result of too much twist. When such is the case, the filling should be thoroughly dampened, either by being steamed or having water sprinkled on it.

Another point to be noted is the friction that is placed on the filling. If the filling is allowed to run out of the shuttle too freely, more than the required length for one pick is very liable to be given off, and when beaten up by the reed it will be sure to rise in ridges. In order to remedy this defect, a small piece of flannel should be placed in the nose of the shuttle in such a position that the filling, when running through the eye, will come in contact with the flannel, thus causing more or less of a drag to be placed on the filling as it is leaving the shuttle. When fine counts are being used, however, care should be taken not to produce so much friction that the filling will be broken as it is being delivered by the shuttle.

Digitized by Google

Another cause of kinky filling is the shuttle rebounding in the box sufficiently to cause slack filling, but not enough to result in the loom banging off.

CUTTING THE FILLING

44. In the great majority of cases, filling is cut when the shuttle is leaving the box in which the end of the shuttle containing the eye is in contact with the picker. When the shuttle is thrown from this box, that part of the filling that extends from the eye to the selvage is doubled on its own track. If, when in this condition, the filling is rubbed by the shuttle against any projection or rough place on the side of the box, it is almost sure to be cut. The box sides that come in contact with the filling should be carefully examined, to ascertain if there are any projections or rough places that will interfere with the filling.

The filling fork should also be carefully examined to learn if it is passing through the grid freely. If it does not, but comes in contact, it is apt to cut the filling. The pin that holds the spindle in the shuttle may become loose and project a short distance from the side of the shuttle. This is quite liable to result in the filling being cut.

See that the shuttle spindle is not thrown up when the shuttle is checked in the box. If it is, the spring in the heel of the shuttle, known as the **spindle spring**, should be tightened.

Sometimes the heel of the temple may be set in such a manner that the temple will come in contact with the reed. When this happens, the filling is very liable to be caught between the temple and the reed, which will surely result in its being cut.

MISPICKS

45. A defect frequently met with in the woven cloth, and one that is due entirely to the carelessness of the weaver, is what is known as **mispicks**. As previously explained, when the loom is stopped by the filling breaking or running out it will run for a pick or two before being

Digitized by Google

entirely stopped. Then when it is started again with fresh filling, if the weaver is not particularly careful, the chances are about even that the first pick of filling placed in the cloth will lie in the same shed as the last pick, thus giving two consecutive picks in the same shed. This defect is more serious in fine than in coarse goods, yet it should be guarded against at all times, and especially so in fancy or colored goods.

DEFECTS CAUSED OUTSIDE OF WEAVE ROOM

46. Foreign Matter in the Cloth.—Imperfect cloth is very frequently caused in the weave room through defects that are entirely outside the province of any of the help in this room, yet as these are defects that will interest the loom fixer as much as any other one person, it will not be out of place to make brief mention of them here.

In examining a piece of cloth, especially if it is held to the light, there will often be found foreign substances, such as leaves, seeds, neps, etc., intermingled with the warp and filling. This, of course, is no fault of the weaver, yet it is something that must be avoided as much as possible, since such cloth appears dirty and does not have that clear, bright appearance that must be sought. These leaves, seeds, and other foreign substances found in cloth are due to the imperfect carding of the cotton; and, consequently, the fault lies with the overseer of the card room, who should always be capable of delivering the cotton to the spinning room in a fairly clean condition, unless the stock being run is of an exceptionally low grade, or the machinery with which he is supplied is inadequate for the results desired.

47. Uneven Yarn.—In many cases when examining a piece of cloth, it will be noticed that the warp or the filling, and sometimes both, are made up of thick and thin places, which give to the cloth a lumpy appearance. Yarn of this character is imperfect and is due to poor spinning. The

Digitized by Google

overseer of the weave room when given such yarn as this with which to produce perfect cloth, should always bring it to the attention of those in authority.

48. Poorly Sized Yarn.—Mention has been made of the manner in which the warp yarn is chafed by the action of the reed, thus causing the fibers of the yarn to be raised. It frequently happens that when the yarn has been imperfectly sized, this chafing will cause bunches, known as **buttons,** to form on the warp back of the reed. When these have grown to a considerable size and become firmly fastened to the yarn, one of two things is sure to result: either the yarn will be broken by the reed pressing against the buttons during the backward swing of the lay, or the buttons passing between the dents and forming in front of the reed will be pushed up to the fell of the cloth, where they will form in bunches and deflect the filling from a straight line when it is being beaten up by the reed, thus causing holes to appear in the cloth. As already stated, defects of this character are due to the imperfect sizing of the warp yarn; yet, when such a warp is received in the weave room, there is much that can be done to lessen the difficulty. The harness cams should be set late so that the filling, in being pushed up to the cloth, will chafe the yarn as little as possible; the warp line should be in such a position that it will pass through the center of the shed when the shed is open, in order that an equal strain may be brought on the yarn both in the top and bottom sheds; the let-off motion should be regulated in such a manner that the least possible strain will be brought on the yarn when unwinding from the beam. Then, again, the weaver should be required to watch such a warp, and when bunches form in this manner they should be clipped off. This, of course, means more time and patience on the part of the weaver, but it pays to see that it is attended to.

49. Large Knots in the Warp Yarn.—Another evil that will cause holes in the woven cloth is **large knots in the warp yarn.** When the yarn is being spooled in the

Digitized by Google

spooler room it frequently breaks or runs out, and the spooler tender, in order to turn off as large a production as possible, or through carelessness, will tie the ends in such a manner that a large knot is formed. When this yarn reaches the process of weaving and the knot comes in contact with the reed, it will act in exactly the same manner as the bunches previously described. This defect is largely obviated by the spooler tenders using a mechanical knot tier.

THE LOOM FIXER

50. A good **loom fixer** is one of the most important hands in the weave room; for on him, more than on any one else, depends both the quantity and quality of the production. It is necessary for a fixer, in order to make a success, to be both a fair mechanic and a good weaver; for not only must he understand how the different parts of a loom should be set in order to run to the best advantage, but he should also thoroughly understand the manner in which these different parts are assembled.

It should be the object of every fixer to see that the looms in his section attain the highest possible percentage of production, and in order to accomplish this it is, of course, necessary to have the looms stopped for repairs as little as possible. The looms should always be kept well oiled, since if the parts that are constantly working against each other are allowed to become dry, difficulties are sure to arise. This is the duty of the weaver, excepting in those mills where a loom oiler is employed, but it should also be the duty of the fixer to see that it is attended to. In a mill that is constantly changing from one class of goods to another, the fixer should study the different cloths and learn just what conditions are necessary for the best running of each. Different-weight goods require different settings of the parts of the loom, the heavier weaves requiring in most cases more power on the picking arrangement; this, in turn, necessitates the binders on the shuttle boxes being adjusted to meet the new conditions. The harness straps may need

Digitized by Google

readjustment, and the let-off motion should be looked over to see that it is working properly.

Whenever a new difficulty is met with, the fixer, instead of altering different parts with the expectation of fixing the loom by chance, should study out the causes that would result in this particular defect, and then carefully study the different parts of the loom which would cause these conditions. If new difficulties are not thoroughly mastered at the time they are met with, the fixer learns nothing, and when the same difficulty comes up a second time there will be the same trouble in fixing the loom.

A good loom fixer will constantly be on the lookout for worn-out parts on the looms of his section, and be ready to replace these when necessary. By this means broken parts will be done away with and the fixer will not be so much sought after by the weaver. This will be found to be the cheaper method in the end, since a new picker stick or a new lug strap is not very expensive, but broken shuttles, smashes, and lessened production are important causes of lessening profits.

Digitized by Google

Digitized by Google

LOOM ATTACHMENTS

UNDERCAMS FOR OTHER THAN TWO-HARNESS WORK

INTRODUCTION

1. Cams in General.—As shedding by cams is the most perfect form of shedding ever devised, it will be found that cams are employed in every case where the expense attached to them does not prohibit their use, or where their number does not render them impracticable on account of the great amount of space occupied. In the United States, cams are generally employed on three-, four-, five-, or six-harness work; in England, even a larger number of harnesses are frequently operated in this manner. The classes of fabrics principally woven in cam-looms are *plains*, *twills*, and *sateens*.

2. In considering the possibilities of cams, there are always certain limitations to be dealt with. If a cam is constructed for two-harness work, it is impossible to use it in weaving any cloth that requires a larger number of harnesses; consequently, when a cam-loom is changed from one kind of weave to another, it is always necessary to change the cams to suit the requirements. This necessitates the loss of time, especially in a mill that is constantly changing from one class of work to another. In many cases special cams must be constructed for special work, thus adding greatly to the expense of operation. Moreover, as undercams act directly on the treadles only, when depressing the harnesses, some arrangement must be adopted by means of which they

For notice of copyright, see page immediately following the title page

Digitized by Google

may indirectly raise the harnesses. This is accomplished by the use of a strap-and-roller connection placed at the top of the loom. This arrangement, however, places certain limitations on the movement of the harnesses. It will be remembered that the action of the cam in pressing down one harness serves to raise another harness by means of the straps and rollers just referred to. Consequently, one harness cannot be raised unless another is lowered; the opposite is equally true—that is, it is impossible to lower a harness without raising another one. This will be found to be true in every case where cams are used in combination with strap-and-roller connections, the number of cams employed not changing the conditions.

3. Suppose, for example, that a cam-loom is on three-harness work, two harnesses being up on each pick and one down, producing what is known as a $\frac{2}{1}$ weave (read two up, one down); then the ratio of harnesses raised to those lowered must always be the same, that is, on every pick that is placed in the cloth there must be two harnesses up and one down. The same would be true if more harnesses were used. Take for example a cam-loom operating four harnesses, the cams being so constructed that two harnesses will be up and two down, producing a $\frac{2}{2}$ weave; then on every pick of the weave there must be the same ratio of harnesses raised to those lowered.

The order in which the cams change the harnesses, however, may be altered. Suppose that a cam-loom is running on four-harness work, the cams being so constructed that three harnesses will be up on each pick and one down. These cams may be placed on the shaft of the loom in such a manner that the first harness will be lowered on the first pick, the second harness on the second pick, the third harness on the third pick, and the fourth harness on the fourth pick. This produces a regular *four-harness twill*. Again, the cams may be so placed on the shaft that the first harness will be lowered on the first pick, the second harness on the second pick, the fourth harness on the third pick, and the

Digitized by Google

third harness on the fourth pick; this will produce what is termed a *broken crow weave.* Cams for more than three harnesses are usually made separate in order that they may permit this interchanging of their order of operation.

After one harness has been lowered or raised, it cannot again be lowered or raised until all the other harnesses employed in the weave have been moved in the same manner. Thus, in the case of the weave just referred to, where one harness is down and three up, if the first harness is lowered on the first pick, all the other harnesses must be lowered before that harness can again be dropped.

4. The order in which the harnesses are changed, where only one harness is raised or lowered on each pick, is generally shown by means of numbers, which designate the number of the harness and also on which pick each harness is to be moved. Thus, in the case of the four-harness twill just referred to, where one harness is down and three up on each pick, the harnesses could be said to be lowered in 1–2–3–4 order; that is, the first harness is lowered on the first pick, the second harness on the second pick, the third harness on the third pick, and the fourth harness on the fourth pick, the figures representing which harness is moved, while the order in which the figures stand show on which pick each harness is moved.

The different orders of moving four harnesses when operated by cams constructed so as to give one harness down and three up on each pick are as follows:

1.	1–2–3–4	4.	1–3–4–2
2.	1–2–4–3	5.	1–4–2–3
3.	1–3–2–4	6.	1–4–3–2

CONSTRUCTION OF DIFFERENT CAMS

5. In constructing cams for different kinds of work there are certain points that should always be borne in mind in order to fully comprehend the different steps necessary. The outer circle of construction, *h d*, Fig. 1, should first be divided into a certain number of equal parts that will be the

Digitized by Google

same as the number of picks to the round; that is, the number of picks that are inserted in the cloth while the cam is making one complete revolution. The term number of picks to the round also generally indicates the number of harnesses that are employed in the weave. Thus, in speaking of a three-harness twill, a twill would be understood that would be woven on three harnesses employing three cams and, consequently, three picks would be inserted while one cam was making a complete revolution. It is not necessary, however, that the number of picks to the round should limit the number of harnesses on which the weave could be woven. However, it will generally be found to be the case on cam-looms that the number of harnesses employed in the weave will indicate the number of picks to the round, and vice versa.

Each one of these equal parts into which the cam is divided will represent one pick of the weave, but since one harness is being lowered while another is being raised, *one-half the change part of one cam will always overlap one-half of the change part of another cam.* The length of dwell of the cam should always be decided on first and marked off on the outer circumference of construction. A dwell equal to the time that it takes the loom to make one-half a pick, or, as it is known, one-half a pick dwell, will be allowed in all cams illustrated here.

FOUR-HARNESS CAMS

6. Cams for $\frac{3}{1}$ Twill.—Fig. 1 shows the construction of a cam that would be suitable for a four-harness twill weave, three harnesses being up and one down on each pick. Two repeats of the weave, in both ends and picks, produced by cams of this construction are also shown in this illustration. In the complete set of cams for this weave, there would be four cams similar to the one shown in Fig. 1. Each cam, however, is constructed in exactly the same manner, with the exception of a slightly greater throw being given to each succeeding cam moving toward the back of the loom, the object of this being to produce an even shed in front of the reed.

Digitized by Google

In constructing cams for any class of weaves, there are certain instructions that will be found common to all. The inner circle representing the cam-shaft should always be drawn first. This circle is shown at *b*, Fig. 1. To the radius used in drawing the circle of the cam-shaft, add the thickness of the hub of the cam; and with this new radius

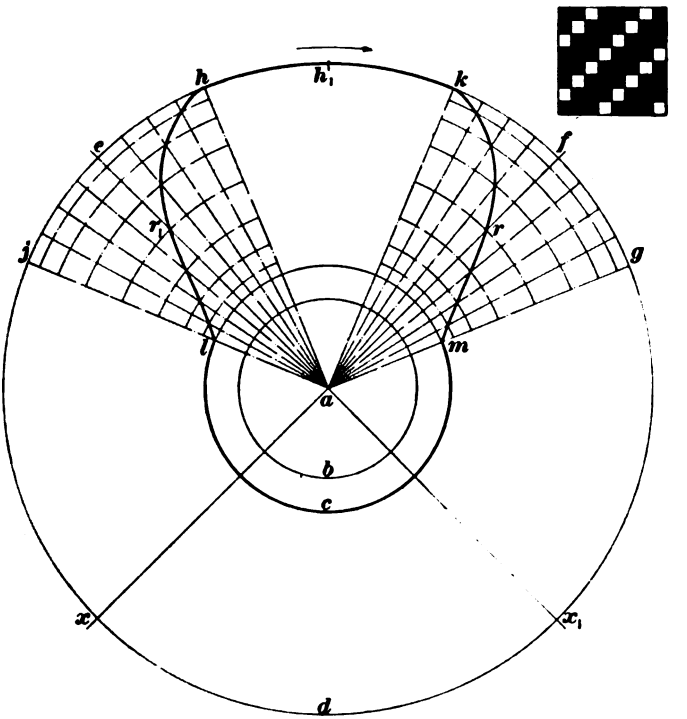

FIG. 1

describe another circle having the same center as the circle previously drawn. This second circle represents the inner throw of the cam and is shown at *c*, Fig. 1. To the radius last used, add the entire throw of the cam; and with the same center describe a third circle, which will represent the outer throw of the cam. This circle is shown at *d*, Fig. 1. After describing these different circles, divide the outer

Digitized by Google

circle into the same number of equal parts as there are picks to the round.

As previously stated, these instructions apply to the construction of any cam. The number of cams employed, the time the harnesses are to remain up or down, or, in short, any circumstances whatever do not interfere in the slightest with this method of construction.

7. As the cam shown in Fig. 1 is for four-harness work, the circle d must be divided into four equal parts, as shown by the arcs fe, ex, xx_1, and $x_1 f$. The cam will move the distance of one arc during one pick and will therefore make one complete revolution in the time that it takes to place four picks in the cloth. The time occupied by the dwell of the cam is to be equal to one-half of the time occupied by one pick, and since the cam moves through one of the four equal arcs during one pick, half of the space occupied by any one of these arcs may be taken to represent that part of the cam during which the harness is stationary. Therefore, divide the arc ef into four equal parts eh, hh_1, h_1k, and kf, and select the two central ones hh_1 and h_1k as the dwell, equal to one-half of ef.

Since the dwell of the cam is to occupy one-half of a pick, one-half the pick, $eh + kf$, will remain in which to construct change parts of the cam. Further, since one-half of each period of change is to be taken from each of the adjoining picks, lay off arcs fg and ej on arcs fx_1 and ex, respectively, each of the former arcs being equal to kf or eh. The first change will now take place during the arc gk, the dwell during the arc hk, while the arc hj marks the change during which the harness will return to its initial position.

8. It should be noted that the arc fg occupies one-quarter of the arc $x_1 f$, which represents the distance through which the cam moves during one pick. The same is equally true of the arc ej with reference to the arc ex. This is in accordance with what has previously been stated in regard to one-half of the change part of one cam overlapping one-half of the change part of another cam. This may be more readily

Digitized by Google

understood if it is remembered that as one harness is being depressed by one cam another harness is being raised, the two harnesses becoming level at a point that marks half the distance of their rise and fall.

It may further be stated that if the time occupied in changing is one-half of a pick, as in Fig. 1, then the harnesses pass at a point reached after the loom has moved one-quarter of a pick; but if the time occupied in changing is one-third of a pick, the harnesses will pass each other at a point reached after the loom has moved one-sixth of a pick. Therefore, a cam constructed after the manner of the one shown in Fig. 1 must move through the distance represented on the outer circle by the arc hj when allowing the harness to rise, while in depressing the harness it must move through the distance represented on the outer circle by the arc kg. Therefore, the arc hk, which represents half a pick, is taken for the dwell of the cam, while the arcs hj, kg, each of which represents half a pick, are utilized for the construction of the change parts of the cam.

9. Next divide the arcs jh, kg into any number of equal parts; eight are used here, but it will readily be seen that the more parts into which these spaces are divided, the more accurately will the lines of the cam be derived from them. Draw lines from these points of division to the center of the circle. Proceed in the same manner as was adopted in laying out the lines of the cam for two-harness work; that is, divide the lines jl and mg into the same number of unequal parts, commencing at the circle c with a small space and gradually increasing this until the center of the line is reached, when it is reduced again proportionately. With the center a and radii equal to the distances from the center to the points of division, draw arcs cutting the lines previously drawn. The points formed by the intersection of these arcs and radial lines are then connected by the symmetrical curves hl and km. This will give the necessary lines, and as a result the cam $hlcmk$ will be obtained.

It will be noticed that at the points r and r_1, which mark half

Digitized by Google

the drop and lift of the cam, the harness operated by this cam will be level with the harness that is passing it; consequently, the central part of the lift of one cam is passing the central part of the drop of another cam.

10. Cams for $\frac{2}{2}$ Twill.—In the case of the cam previously illustrated, each harness must be held down during the time that it takes the loom to make but a single pick. In a large number of weaves, however, the harnesses must be kept down for a longer time than this. An illustration of a cam of this type is found in one constructed for a four-harness twill having two harnesses up and two down on each pick. A cam suitable for this weave will cause the harness that it operates to be depressed during two picks of the loom and will also allow the harness to be raised during two picks. However, in a weave of this character there will be two harnesses changing on each pick, one being lowered and another raised.

Fig. 2 represents the construction of a cam suitable for such a weave. The circles b, c, and d are drawn in a manner similar to the construction of all cams. The outer circle is then divided into four equal parts, since there must be four cams to operate the harnesses for this weave. These parts are represented by the arcs $x x_1$, $x_1 x_2$, $x_2 x_3$, and $x_3 x$.

As previously stated, this cam holds the harness down while two picks are being made by the loom, but it should be noted that during half a pick the cam must be changing the harness; therefore, that part of the outer circle d that is to form the line of the cam must represent one and one-half picks. Any part of the circle d that represents one and one-half picks may be taken as this part of the cam. In Fig. 2, it is represented by the arc $h d k$. This arc is obtained by adding to each side of the arc $x d x_3$ a space equal to one-quarter of a pick. Since the arc $x d x_3$ is equal to one pick, and the arcs $x k$ and $x_3 h$ are each equal to one-quarter of a pick, the arc $h d k$ must be equal to one and one-half picks.

From the points k and h, measure off on the outer circumference arcs that will represent the space moved through by

Digitized by Google

the cam during one-half of a pick, after the manner explained in Art. **7.** This will give the arcs kg, hj, in which the change parts of the cam are to be drawn. Divide these arcs into equal parts by lines drawn from the center to the circumference of the outer circle; then by drawing arcs of different circles divide these lines into unequal spaces.

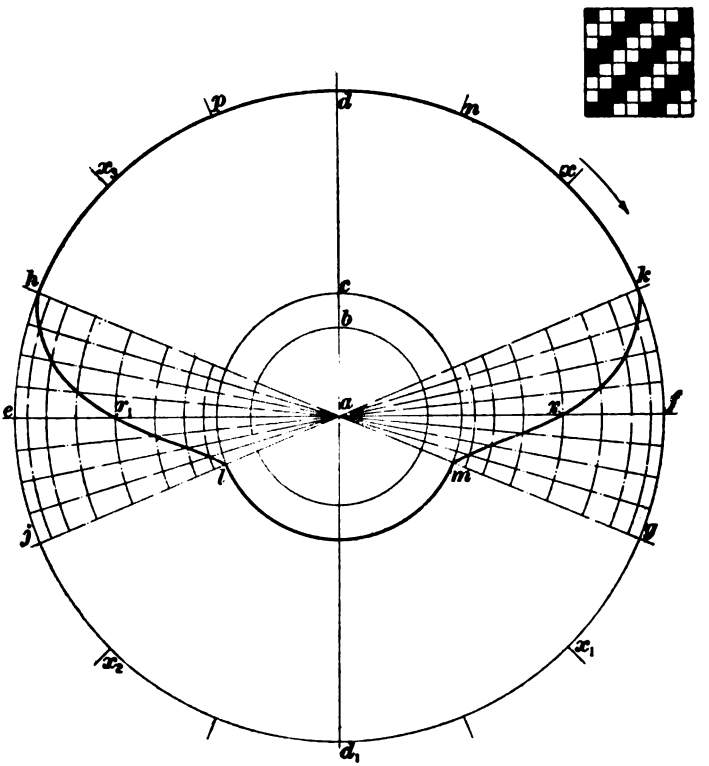

FIG. 2

Connect the points of intersection by means of curves $h\,l$ and $k\,m$, which will give the lines of the cam desired.

11. By following the action of this cam through the four picks a clearer idea of its operation may be obtained. It should constantly be borne in mind that the cam makes a complete revolution only once during every four picks.

Digitized by Google

Considering that the cam is revolving in the direction of the arrow, as shown in the illustration, when the part at *m* is in contact with the treadle, the cam is just commencing to depress the harness. The lay at this point is coming forwards in its action of beating up the filling, its exact position depending entirely on the setting of the shedding motion. At the point *r* the two harnesses that are changing are level; at the point *k* they are entirely changed and a pick of filling is inserted in the cloth while the lay is completing its stroke, or while the cam is moving from *k* to *n*. At this point the lay is again just starting on its forward stroke and the loom has completed one pick of the weave, the arc *g n* being one-quarter of the entire circle and representing the space through which the cam moves during one pick. Another harness is now commencing to be lowered, while still another one is being raised. This, however, is not shown, as only one cam is illustrated and the action of that one only will be followed.

From *n* to *p*, the lay is again moving forwards, and from *p* to *h* it is on its backward stroke; therefore, when the cam has revolved until the point *h* is in contact with the treadle, the crank-shaft has completed two revolutions, and consequently two picks have been placed in the cloth.

While the cam is revolving from *h* to *l*, the lay is moving forwards for the third time, and before another pick of filling is placed in the cloth the harness is raised. By following the action of the cam while the harness is being raised, or while that part of the cam from *h* to *l* is in contact with the treadle, it will be seen that it is similar to that part of the cam from *m* to *k*. Owing, however, to the direction in which the cam is revolving, it will be depressing the harness during the time that *m k* is in contact with the treadle, while it will allow the harness to be raised during the time that *h l* is in contact with the treadle. The time occupied by the harness in lifting is half a pick, since the arc *h j* represents the space the cam passes through in this length of time.

The distance from *l* to *m*, measured on the circumference of the outer circle, gives the arc *j d, g*, which is equal to the

Digitized by Google

arc *h d k*; therefore, since the part *l m* forms the arc of a true circle, its action on the treadles will be similar to that part of the cam formed by the arc *h d k*, with the exception that in one case the harness will be down while in the other it will be up. Thus, during one complete revolution of the cam, the loom will make four picks, the harness causing the warp ends drawn through it to be raised over two picks of filling and to be under two picks.

FIVE-HARNESS SATIN CAMS

12. Five-harness satin weaves are either warp or filling satins. In the former case, the warp is made to predominate on the face of the cloth, while in the latter the filling will be found to be more prominent. In a five-harness warp satin, the cams are generally constructed in such a manner that four harnesses will be up and one down on each pick, although a warp satin is sometimes woven face down in the loom, in which case there is one harness up and four down on each pick. Cams for five-harness filling satins are so constructed that they will give one harness up and four down on each pick. Fig. 3 shows the construction of a cam suitable for such a weave.

To draw such a cam proceed to draw the circles representing the shaft, hub, and outer throw of the cam. Next divide the outer circle into five equal parts, since five cams are necessary for the weave. The arc *f e* represents one of these parts. Since the cam is to give the harness a dwell of one-half a pick, one-half of the arc *f e* should be marked off for the dwell of the cam. This gives the arc *j g*, but since the harness is to be up during this dwell, the distance *j g* should be measured on the circle representing the hub of the cam, which gives the arc *l m* as that part of the cam that gives the dwell to the harness during the pick that it is up.

From the points *j*, *g* on the outer circumference, measure distances equal to one-half a pick. This gives the arcs *g k*, *j h*, in which to form the change parts of the cam. These

Digitized by Google

arcs are divided in the same manner as previously described, and the change parts of the cam *m r k* and *l r, h* drawn.

By means of these illustrations the construction of any cam for weaving should be readily understood. It should always be borne in mind, however, that the outer circumference, or throw, of the cam is first divided into as many equal

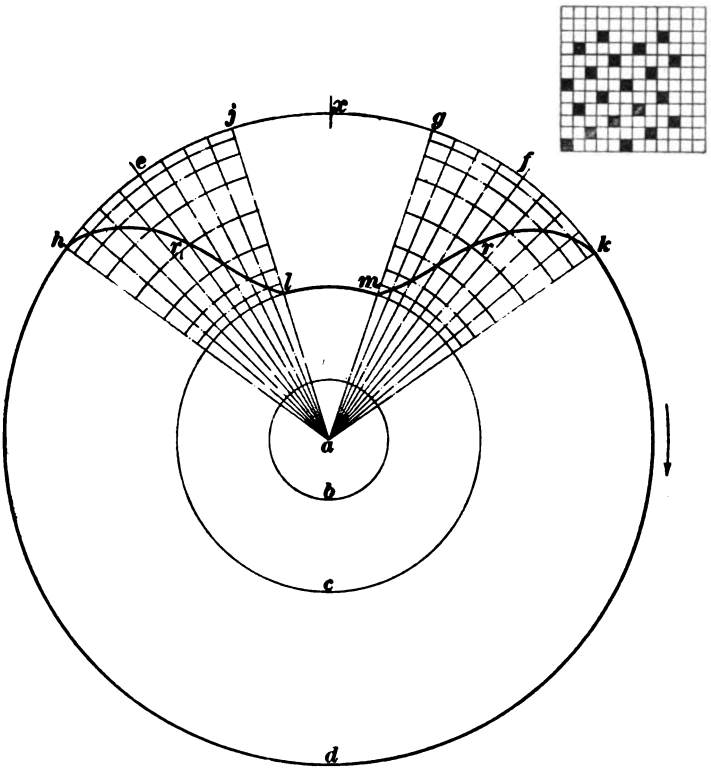

FIG. 8

parts as there are picks to the round in the weave. It should be remembered that one-half the change part of one cam will always overlap one-half of the change part of another cam, and that each cam makes a complete revolution while the crank-shaft is making as many revolutions as there are picks to the round.

Digitized by Google

ATTACHMENTS FOR THREE-, FOUR-, FIVE-, AND SIX-HARNESS UNDERCAM LOOMS

AUXILIARY SHAFTS

13. As previously stated, a cam makes one complete revolution during the time that it takes the loom to make as many picks as there are cams employed. Thus, in the case of a two-harness cam, each cam makes one revolution while two picks of filling are being placed in the cloth, and since the cam-shaft of the loom makes one revolution while the loom is making two picks, these cams can be fastened to the cam-shaft and they will have the desired speed. When, however, cams are employed on three-, four-, five-, or six-harness work and it is necessary for each cam to make only one revolution during the time that the loom is making three, four, five, or six picks, it is not possible to operate these cams on the cam-shaft of the loom, which makes one complete revolution during every two picks; therefore, some other arrangement must be employed in order to obtain the right proportion between the revolutions of the cams and the crank-shaft, one revolution of the crank-shaft being equal to one pick of the loom.

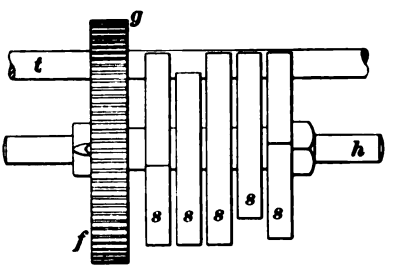

FIG. 4

When it is desired to operate more than two cams, the cams are setscrewed to a shaft known as the **auxiliary shaft**, which is driven from the cam-shaft by a train of

Digitized by Google

gears suitable to give the desired speed to the cams. Figs. 4 and 5 illustrate such an arrangement, Fig. 4 being a rear and Fig. 5 a side view of the same motion. The cam-shaft *t* of the loom carries a gear *g* that drives another gear *f* fastened on a shaft *h*, which is known as the auxiliary shaft. This shaft rests in bearings which are supported by

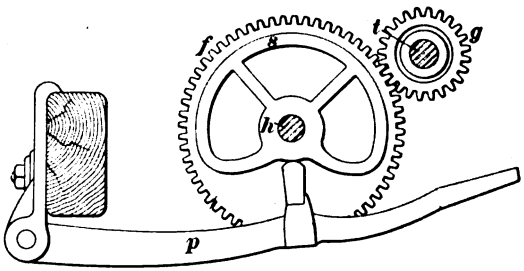

FIG. 5

cross-girts extending from the front to the back girt of the loom. In some cases these bearings are simply supported by rests fastened to the back girt of the loom. In Figs. 4 and 5 the cams are marked *s* and the treadles *p*.

GEARING

14. It is important to consider the gears that drive this auxiliary shaft, in order that the speed of this shaft in relation to the speed of the cam-shaft may be correct. In this connection only the two shafts *t*, *h* are dealt with.

As already explained, the cam-shaft makes one revolution while the loom is running two picks. On the other hand, it is necessary to so drive the auxiliary shaft that it will make one revolution while the loom is running five picks, since it is five-harness work. If convenient, the simplest method of doing this is to have one large-toothed gear on the auxiliary shaft and a smaller gear on the cam-shaft. This is the method adopted in the illustration. In such a case, the calculation for the number of revolutions is simply the proportion of the two gears to each other. The teeth acting

Digitized by Google

alternately on each other, their relative speeds will be as the number of teeth of one are to the number of teeth of the other. For instance, if it is required to have five picks placed in the cloth while the cam is revolving once, as in this case, then the proportion of the teeth in the gear on the cam-shaft to the teeth of the gear on the auxiliary shaft is as 2 to 5, since the cam-shaft makes only one revolution to every two picks.

To illustrate this, a 60-tooth gear is found on the auxiliary shaft and it is desired to know what gear shall be placed on the cam-shaft in order to give one round of the cam to five picks of the loom. This will resolve itself into the following equation, letting x represent the number of teeth in the gear on the cam-shaft:

$$x : 60 = 2 : 5$$

Multiplying the extremes and means together gives $5x = 120$. Since $5x = 120$, x will be one-fifth of 120, or 24, which will be the required number of teeth in the gear on the cam-shaft. That is, if a 24-tooth gear on the cam-shaft of the loom is driving a 60-tooth gear on the auxiliary shaft, then the loom will run five picks while the auxiliary shaft makes one revolution. By following this method the gears may be obtained for three-, four-, five-, or six-harness work.

15. Another rule for finding the required size of gears on cam-shafts when driving auxiliary shafts may be stated as follows:

Rule.—*Multiply the number of teeth in the gear on the auxiliary shaft by two and divide by the number of picks to the round.*

EXAMPLE.—What must be the gear of the cam-shaft on five-harness work, if the auxiliary shaft has a 60-tooth gear?

SOLUTION.—Applying the rule just stated,

$$60 \times 2 = 120$$
$$120 \div 5 = 24$$

The cam-shaft should have a 24-tooth gear. Ans.

Very frequently it may be found inconvenient to have only two gears. The two shafts are placed at a fixed distance

Digitized by Google

apart, and the gears must therefore be of such a diameter as to suit this fixed distance; consequently, it will frequently happen that in changing from one number of cams to another, not only the diameter, but the pitch of the teeth, will have to be altered. It is desirable to avoid this as far as possible, and indeed to avoid the necessity of making the gears of such diameter as to suit the distance between the shafts. This is done by introducing an intermediate gear, which becomes simply a medium for communicating the power without in any way altering the relative speed of the two shafts; therefore, the same pitch of teeth may be preserved throughout, and in figuring to obtain the gears the only thing to observe is the relation of the gear on the cam-shaft to that on the auxiliary shaft, leaving the intermediate out of the calculations entirely. In fact, the method is the same as in the first case, where no intermediate was used.

By using a 60-tooth gear on the auxiliary shaft and adopting the intermediate-gear arrangement it is only necessary to change the gear on the cam-shaft when changing from one weave to another, using a 40-tooth gear for three-harness work, a 30 for four-harness work, a 24 for five-harness work, and a 20 for six-harness work. These gears may be kept on the cam-shaft and simply moved into position as desired.

One point, however, to be noted in connection with intermediate gears, is that when such a gear is introduced the direction of motion of the driven gear is opposite to what it is when driven direct from the driving gear. In some cases cams are so constructed that the motion given to the harnesses when being depressed differs slightly from their motion when being raised. When this is the case care should be taken to have the gears so arranged that the shaft carrying the cams will revolve in the right direction. When, however, the motion given to the harnesses in both rising and falling is exactly the same, the direction of motion of the cams does not matter, as the point of contact of the treadle with the cam is directly under the center of the cam.

Digitized by Google

HARNESS ROLLS

16. It is necessary that some arrangement supplementing the action of the cam be made by which one harness will be raised as another is depressed. The best means of accomplishing this is by means of levers in one form or another, since by their use the *non-positive action* of the cams, as it is called, is converted into a *positive action*. In other words, the cam that can act only in one direction by itself is made to act in both directions through the medium of these levers.

Suppose that only two harnesses are being used: if the harnesses are lowered by the action of the cam, then they may be connected at the top by means of any simple lever or roller, which acts as a lever, so that as one harness is lowered the other, through the medium of this lever or roller, is raised. In this case, the only thing to be considered is that the lever or roller shall be so arranged that the harnesses are not held too far apart, and that the different rollers are of the proper diameters.

ARRANGEMENTS

17. There is not much difficulty in arranging these rollers for any even number of harnesses, the consideration being principally that they shall not spread the harnesses too much. In such an arrangement it is, of course, always necessary that as one harness is depressed another must rise, and there must always be the same number lowered. It does not follow, however, that there must always be just half the harnesses lowered and raised; in fact, there may be any number that is not more than one-half the number of harnesses, but whatever that number is, it must always remain the same.

Whenever the number of harnesses is uneven, a more difficult arrangement must be adopted. It is not different in principle from that employed on an even number of harnesses, but it is different and more difficult to understand when taking into account the question of leverage.

Digitized by Google

Fig. 6 is an illustration of the harness-roll arrangement on five-harness work; the working of these rollers for each pick of the weave is shown. The weave used is the five-harness satin, with the following order for lifting the harnesses: 1–3–5–2–4.

There are four rollers *a*, *b*, *c*, *d* which may, in fact, be called double, since each has two diameters. The roller *a*

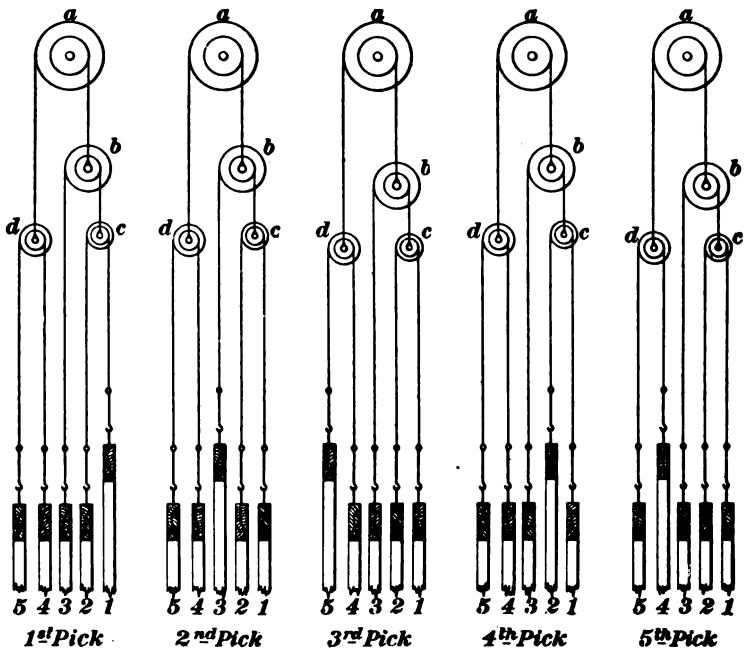

Fig. 6

is fastened to a shaft supported by the arch of the loom. Connected to each of its two faces are straps supporting shafts, on which are fastened the rollers *b*, *d*. These straps simply support the shafts by means of loops and are not fastened in any way, thus permitting the shafts to turn freely as they are acted on by the rollers. The roller *d* supports two harness straps, while the roller *b* has fastened to its larger diameter a harness strap, its smaller diameter

Digitized by Google

containing a strap that supports another roller *c*, this last roller in its turn supporting two harness straps.

It will be seen that all the harnesses may be said to be supported from one roller, which in this case is *a*. It will also be seen that one side of this roller supports three harnesses, while the other supports only two; also, that the roller *b*, which is supported by *a*, in its turn supports two harnesses on one side, while it supports but one on the other.

18. By following the action of the cams on these harnesses and rollers, the principles of the arrangement will be understood. On the first pick, the cam allows the first harness to rise; on the second pick, the first harness is lowered while the third harness is raised in the following manner: As the cam acts on the first harness to depress it, the natural tendency of the harness strap attached to this harness is to turn the roller *c*, but it is prevented from doing this by the harness strap connected to the second harness, this harness being held down by the cam that operates it. Consequently, the motion is communicated to the roller *b* by the strap connections; the tendency then is to turn this roller.

Since the cam that operates the third harness has revolved until it is in a position to allow the harness to be raised, it is readily seen that the roller *b* will be turned and the harness lifted.

19. By following the action of the next movement, a slightly different method of leverage will be observed. As the cam depresses the third harness on the third pick, its tendency will be to turn the roller *b* to which it is fastened, but it is prevented from doing so by the fact that the roller *c* is held in position by the cams that operate the first and second harnesses. Therefore, the motion is communicated to the roller *a* by the strap connections, and consequently this roller will be turned. This will tend to lift the roller *d*, but since the cam that operates the fourth harness will not allow that harness to be raised, the roller *d* in addition to being lifted will also turn, this being possible through the

Digitized by Google

fact that it is simply supported by a loop in the strap. This action of the roller *d* will wind up the strap connected to the fifth harness, and since the cam operating this harness has revolved until it is in a position to allow the harness to rise, the fifth harness will be lifted on this pick.

From these descriptions, it will be seen that the motion of one harness being depressed will be communicated by means of the strap and roller connections to whichever harness the cams allow to rise. It is also evident that rollers can be easily arranged to suit any number of harnesses, but it should be kept in mind, as already pointed out, that they will only serve for patterns where the same number of harnesses is raised for each pick.

To set the cams on work that contains more than two harnesses, turn the crank-shaft until it is on its bottom center; then turn the cams on the auxiliary shaft until the harnesses that are changing are level. Tighten the setscrews on the cams when they are in this position.

SELVAGE MOTIONS

PLAIN SELVAGE MOTION

20. When cloth is being woven in which the ends change only once in three or more picks some arrangement, in addition to the harnesses, must be used in order to produce a selvage, since it is necessary for the ends that form the selvage to change every time the filling is thrown across in order to catch and hold the filling. When the ends interlace frequently with the filling, the **plain selvage motion** may be used. This motion is shown in Fig. 7.

Ordinary plain cams a, a_1 that operate the treadles p, p_1 are placed on one end of the cam-shaft *t*. Connected to the treadles are straps fastened to a roller *c*, which is fastened to a shaft *d*. This shaft extends the entire length of the loom and on each end has a roller *e* which operates the harnesses f, f_1. These harnesses pass over a roller *g* which is held in position by a support fastened to the arch of the loom. The

Digitized by Google

selvage ends are drawn through these harnesses, and since the harnesses are operated by cams on the cam-shaft they will change at every pick, and thus produce a plain selvage. The cams operating this motion are set the same as cams for plain work.

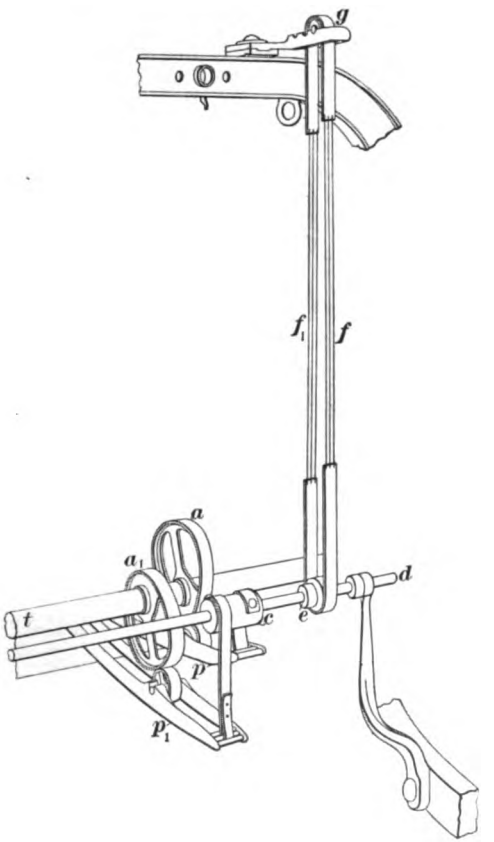

FIG. 7

Instead of having this selvage motion operated by cams and treadles, as shown in Fig. 7, the shaft *d* is frequently given the desired motion by means of an eccentric on the end of the cam-shaft, the eccentric imparting motion to the shaft *d* by means of a connecting-rod.

Digitized by Google

TAPE SELVAGE MOTION

21. When cloth is being woven in which the filling does not interlace with each end more than once in five picks, as is the case with a five-harness satin, some other arrangement must be used, since if the warp ends are interlacing with the filling only once in five picks and the selvage ends

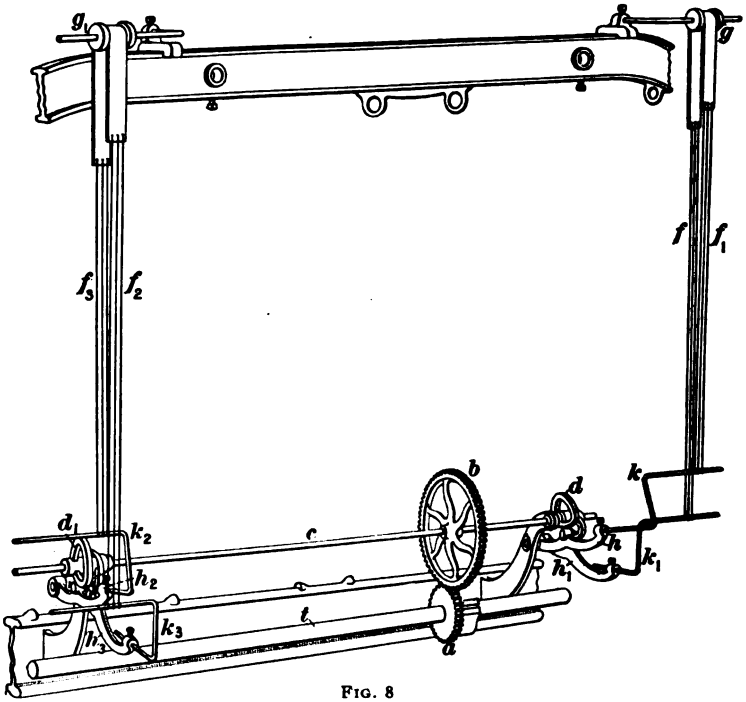

FIG. 8

are interlacing at every pick, owing to the contraction being so much greater on the selvage ends by reason of their more frequent interlacings with the filling, the selvage ends will become so much tighter than the warp ends for the body of the cloth that it will be impossible to weave them. To overcome this difficulty a **tape selvage motion** is used. This motion is shown in Fig. 8.

With this motion two picks of filling are placed in one

Digitized by Google

shed of the selvage; consequently the selvage ends interlace only once every two picks, yet the selvage will change each time the shuttle is on the side with that selvage; that is, the two selvages change independently of each other, the selvage on one end changing one pick and the selvage on the other end changing the next.

In order to accomplish this, two sets of cams must be employed. Referring to Fig. 8, on the cam-shaft t is a gear a driving another gear b on the shaft c, which extends from one end of the loom to the other. At each end of this shaft is placed a set of cams d, d_1 which operate the treadles h, h_1, h_2, and h_3. Connected to the ends of the different treadles are small rods k, k_1, k_2, and k_3.

Connected to these rods are the harnesses f, f_1, f_2, and f_3, through which are drawn the selvage ends. These harnesses are connected at the top to rollers g, g_1 which rest in supports fastened to the arch of the loom.

The gear b contains twice the number of teeth that are contained in the gear a; consequently the shaft c will make one revolution while the cam-shaft t, which contains the gear a, is making two revolutions. Thus, the shaft c will make one revolution every four picks.

By setting the cams on each end of this shaft so that one will operate one pick and the other the next pick, and by having the shuttle picking from the side on which the selvage is changing, it is possible to place two picks of filling in each shed of the selvage and yet tie the ends at each pick.

22. Operation.—By considering the action of the cams, this motion may appear somewhat plainer. Suppose the shuttle to be picking from the right-hand side of the loom: Then the cams at d have just operated and the selvage has changed to receive and catch the pick of filling; the shuttle is driven across the loom and the shaft c makes one-quarter of a revolution. As the lay comes forwards for the next pick, the cams on the other side of the loom, or at d_1, will change the harnesses; but the cams at d will be on the

Digitized by Google

dwell and therefore will not change the selvage harnesses on their side.

The shuttle is next picked from the left-hand side of the loom, and during this pick the shaft c makes another quarter revolution. The cams at d will now change the selvage, while the cams at d_1 will keep the selvage on the left-hand side stationary. The loom will pick from the right-hand side and the shaft c will make another quarter revolution. The shuttle will again be thrown from the left-hand side after the left-hand selvage has changed, and when it reaches the right-hand box the shaft c will have made one complete revolution and the harnesses will be in their original position. Thus each selvage end will make only one interlacing with the filling every two picks, yet the filling will be caught by the selvage at every pick.

23. Setting the Cams.—To set the selvage cams on such a motion proceed as follows: With the crank-shaft on the bottom center, set the cams that are on the same side as the shuttle in such a position that the selvage harnesses on that side will be level at that point. Turn the crank-shaft one complete revolution; with the shuttle in the opposite box and the crank-shaft on the bottom center, set the two remaining cams so that the selvage harnesses operated by these cams will be level or just passing each other at this point.

SHEDDING MECHANISM OF A LOOM

24. Fig. 9 shows the complete **shedding mechanism of a loom** suitable for five-harness satin work, the under motion being illustrated. The different parts, together with their letters of reference, are as follows: x_3, arch of loom; a, b, c, d, top rolls to which harness straps are attached; q_3, top harness straps; q, harnesses; k, harness jacks, which serve as a connection between the bottom straps and harnesses; q_1, bottom straps; r, front bottom girt; r_1, back bottom girt; x, x_1, cross-girts, which serve to support the auxiliary shaft; x_2, support for the selvage cam-shaft; h,

Digitized by Google

auxiliary cam-shaft; t, cam-shaft; e, shaft for selvage motion; s, five-harness satin cams; d_1, selvage cams; g, gear on cam-

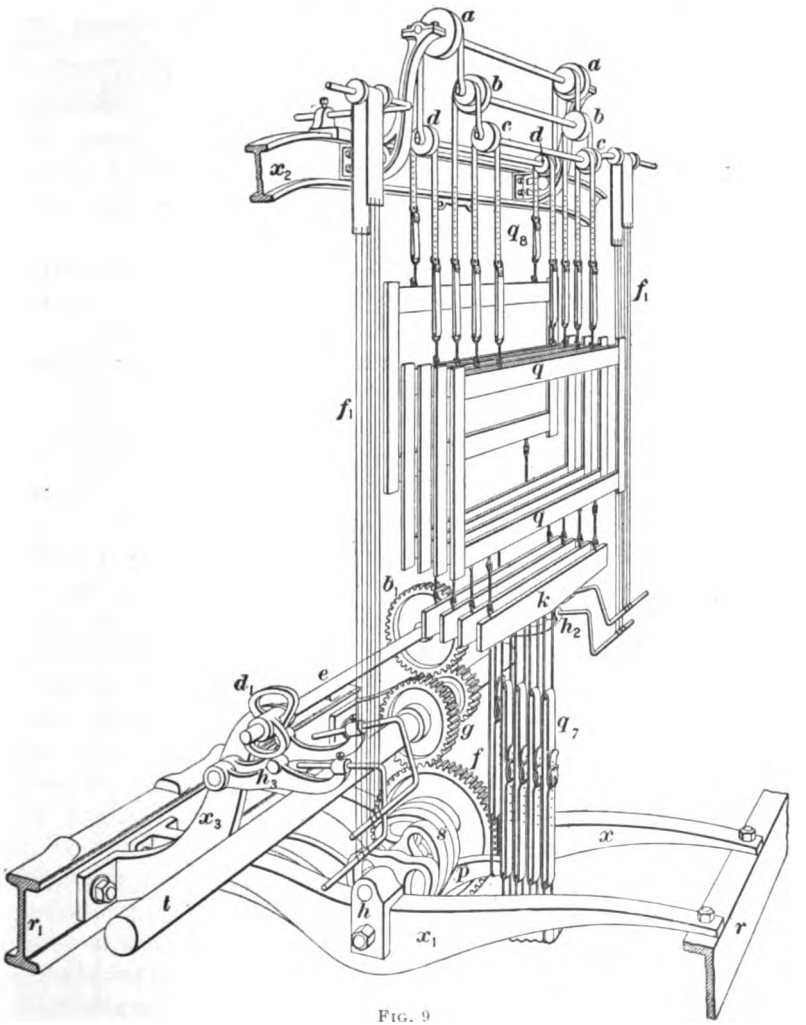

FIG. 9

shaft; f, gear on auxiliary shaft driven by g; b_1, gear on selvage cam-shaft; p, treadles for the harness motion; h_1, h_2, treadles for the selvage motion; f_1, selvage harnesses.

Digitized by Google

SIDE CAMS

25. Some looms on four-, five-, or six-harness work have their cams placed at the side instead of under the loom, the claim of the builders being that the cams are much easier to take off and put on when it is desired to change from one class of work to another.

Fig. 10 (*a*) and (*b*) are illustrations of a five-harness side-cam motion, (*a*) being a front and (*b*) a side view; l_1 represents the crank-shaft of the loom, on one end of which is placed the bevel gear h_1, which drives a larger gear h fastened to a shaft supported by arms extending from the side of the loom. On the shaft with the gear h are placed five cams. The arms c_1 are supported by a shaft passing through them at their central points, this shaft being held in bearings that rest in a support that is fastened to the side of the loom. These arms act as levers and are free to turn on the shaft that supports them. Fastened to the upper end of these levers are the straps d, which, passing over the rollers e, are attached to the top of the harnesses. Fastened to the lower end of the levers are other straps d which, passing around the bottom rollers, are connected to the bottom of the harnesses. Connected to each of the levers c_1 is an arm c, to the outer end of which is fastened a roller that works in one of the cams on the shaft driven by the gear h_1. One cam is shown at s.

It is important to notice that since the cam-shaft contains five cams, it is necessary that it should make one revolution to every five picks; but it will also be noticed that in this case the cam-shaft is driven by a gear on the crank-shaft, which makes one revolution at each pick; consequently the relation of the number of teeth in the gear on the cam-shaft to the number of teeth in the gear on the crank-shaft must be as 5 to 1. In other words, the gear on the cam-shaft must contain five times as many teeth as the gear on the crank-shaft

Digitized by Google

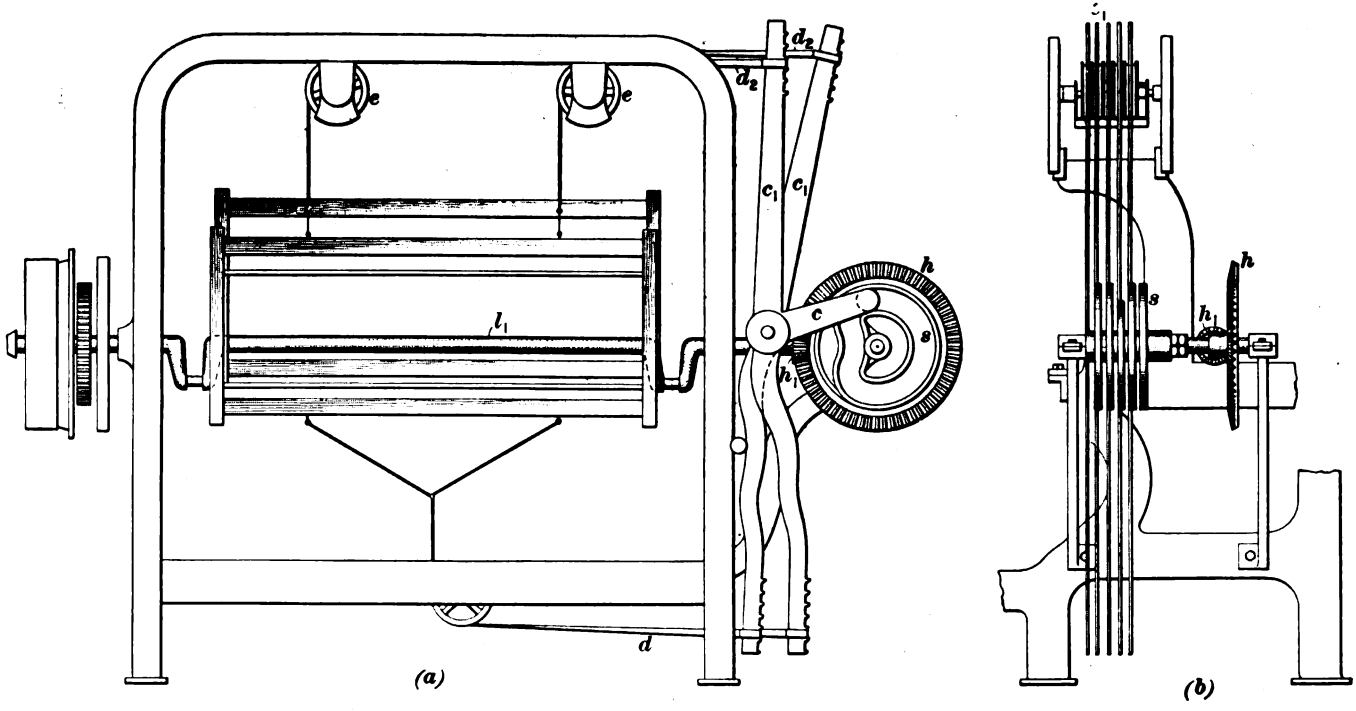

FIG. 10

Digitized by Google

26. By considering the action of one cam, an understanding of the action of the whole may be obtained. As the cam revolves, the roller that works in it is raised; but since the roller is fastened to the outer end of the arm c, this action will cause the upper end of the lever c_1 to be thrown in toward the loom, while the lower end will be thrown out. By following the strap connections, it will readily be seen that this action will serve to lower the harness operated by this lever. As the cam continues to revolve, the arm c will be brought back to its original position and will thus raise the harness again.

Each cam is setscrewed to the shaft and contains a projection that fits into the cam next to it, so that although the order of the levers lifting the harnesses may be changed, yet the relative position of the cams is easily ascertained. To set the cams on the side-cam loom, proceed in the same manner as with the under motion; that is, set the cams so that all the harnesses which are changing will be level when the crank-shaft is on its bottom center.

CONTINUOUS TAKE-UPS

27. In many cases weavers, instead of regulating the let-off motion when there is not sufficient friction to hold the cloth at a proper tension, roll the slack cloth down by means of turning the take-up gears by hand. This has a strong tendency toward making the cloth uneven; and although it may not show prominently in all classes of work, yet the exact number of picks per inch called for will not be placed in the cloth. To do away with this evil, **continuous take-ups** are applied.

An illustration of this motion is given in Fig. 11. On the cam-shaft is placed a bevel gear b meshing with another bevel gear b_1 on the side shaft c. The side shaft also carries a single-threaded worm d which drives the worm-gear e. The inner side of the gear e carries one-half of a clutch, the other half being attached to the side of the gear g, which has no effect on the drive of this train of gears, but simply

Digitized by Google

serves as a *let-back motion*. The gear *g* is known as the pawl ratchet gear. On the same shaft with the gear *g* is the stud gear *j* which, through the regular train of take-up gears *f* (change gears), *h*, *k*, and *l*, drives the sand roll. When the loom is started and the shipper handle brought into its retaining notch, the two halves of the clutch will be in contact; and since the bevel gear *b* is positively driven by the cam-shaft of the loom, a positive motion will be imparted to the sand roll and it will be impossible to wind down the cloth by hand so long as the loom is running. With this motion thin places are prevented in the cloth when the loom is stopped

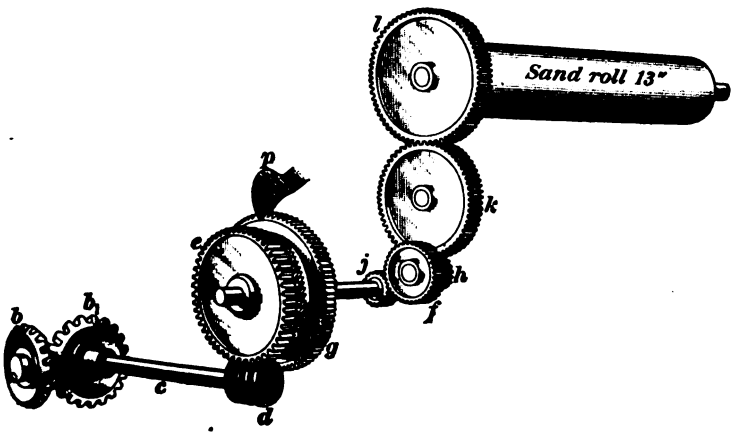

FIG. 11

by the filling running out or breaking, by means of the filling-fork slide acting on the clutch in such a manner as to disengage the two halves. The tension of the cloth then turns the sand roll back a slight distance, the pawl *p* being pushed back until the end of a slot in the pawl comes in contact with the stud on which the pawl rests, when the gear *g* is prevented from turning any further. When the loom is restarted, the two halves of the clutch are thrown into gear; and as the gear *g* is now turned in the opposite direction, the pawl *p* will drop into the position it occupied before being pushed back.

Digitized by Google

Digitized by Google

Digitized by Google

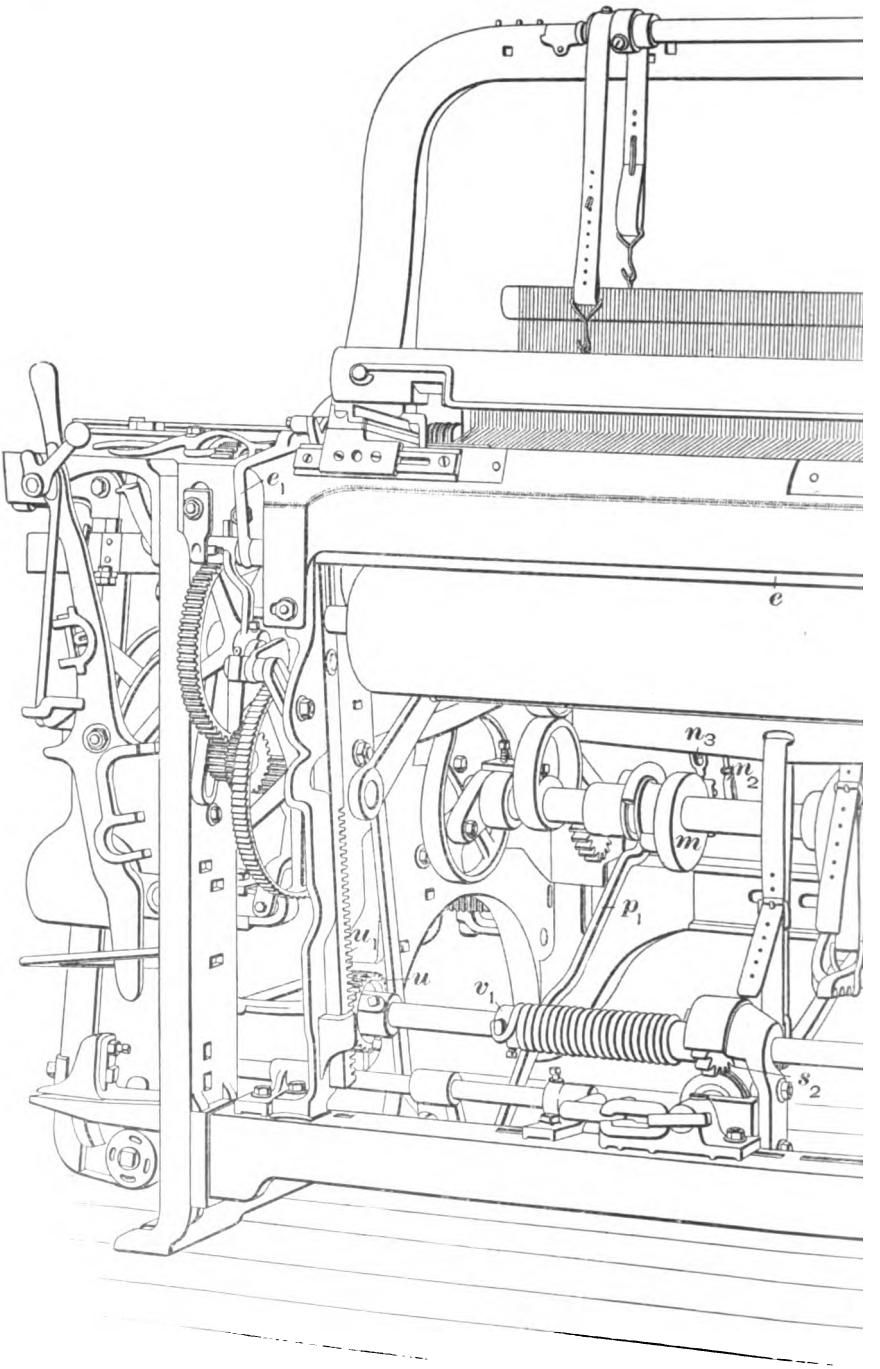

Fi

Digitized by Google

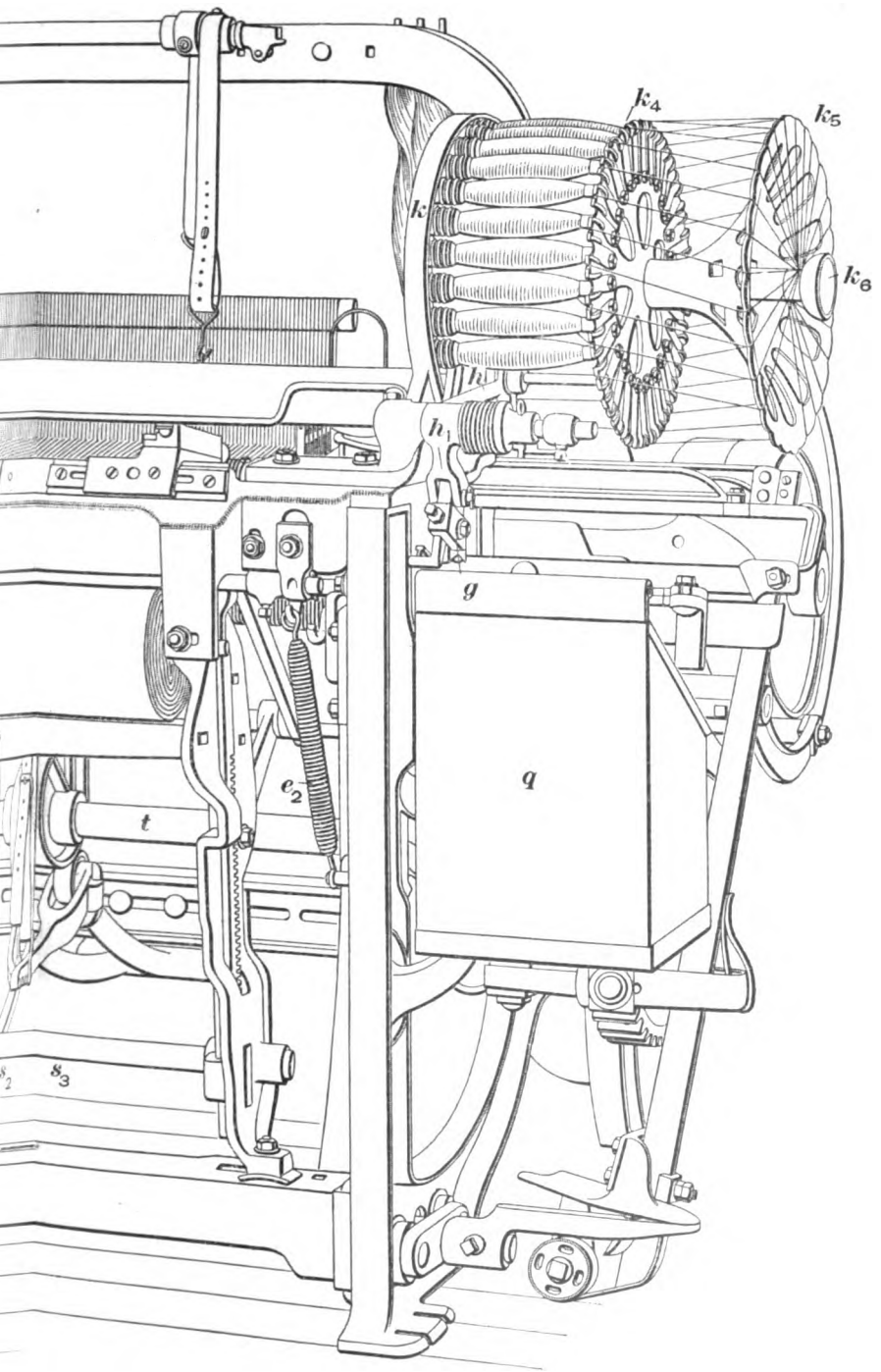

FIG. 1

Digitized by Google

Digitized by Google

AUTOMATIC LOOMS

THE NORTHROP LOOM

INTRODUCTION

1. Within the last few years there have been placed on the market looms containing devices that render weaving even more automatic than it is on the ordinary plain loom; these devices come principally under two heads: *filling-changing mechanisms* and *warp stop-motions*. With the ordinary plain loom, when the filling in the shuttle is exhausted the loom is automatically stopped, and it is necessary for the weaver to replenish the filling before the loom can be started. This necessarily takes a certain amount of time and results in lessened production. It is to avoid this loss of time that the filling-changing device has been invented. Its objects are: (*a*) to make the actual running time of the loom as great as possible and thus increase production; (*b*) by doing away with the necessity of changing a shuttle every time the filling runs out, to make it possible for the weaver to tend more looms and by this means lessen the cost of production. These objects are accomplished by attaching to the loom certain parts that will automatically supply the loom with fresh filling whenever the filling breaks or runs out. The attaching of these parts brings up another feature that must be successfully met before any filling-changing mechanism can fully accomplish its objects.

If a weaver should attempt to run an extra number of looms that were supplied with this device alone, there would be considerable difficulty in preventing imperfect cloth, since

For notice of copyright, see page immediately following the title page

Digitized by Google

an ordinary plain loom, when a warp end breaks, continues to run, thus allowing the broken end to become tangled around adjacent ends and spoil any cloth that may be woven before the loom is stopped and the broken end drawn in. To overcome this difficulty, warp stop-motions are always applied to looms that have a filling-changing mechanism attached. The object of a warp stop-motion is to make it possible for a weaver to run a large number of looms without the liability of making imperfect cloth. This is accomplished by attaching to the loom certain mechanisms that will detect any broken end in the entire warp and, through additional mechanism, stop the loom. Thus, by combining the warp stop-motion with the filling-changing mechanism, both motions are made more efficient, since a good filling-changing device should relieve the weaver of considerable work and therefore make it possible to run a large number of looms, while a warp stop-motion should make it possible for this to be done without the attendant risk of imperfect cloth.

If it is considered that, in the manufacture of plain cloth, the cost of weaving is about equal to the combined cost of all the other processes, it will readily be understood that any improvements in the loom along these lines will prove of immense benefit.

2. The type of automatic looms known as the **Northrop loom**, shown in Fig. 1, will be taken to illustrate the general principles used in the construction and operation of warp stop-motions and filling-changing devices. The introduction of these devices, however, has necessitated a change in many parts of the loom, and consequently it will be found that in connection with the warp stop-motions and filling-changing mechanisms there are parts of the loom that, although used for the same purpose as certain parts on the ordinary plain loom, bear little resemblance to them. The introduction of any new machine also necessarily brings into use new terms, and in describing this loom the different parts that are new to the trade will be given the terms generally applied to them.

Digitized by Google

WARP STOP-MOTIONS

COTTON-HARNESS STOP-MOTION

3. Two methods are commonly adopted on the Northrop loom to cause it to automatically stop when an end breaks, one being known as the *cotton-harness stop-motion*, while the other is known as the *steel-harness stop-motion*. The former, which is attached to the loom shown in Fig. 1, will be described first. In case a **cotton-harness stop-motion** is used on a loom, the warp ends are drawn through the eyes of the regular harness and also through flat pieces of steel, known as **drop wires,** which are supported by a bar, known as the **heddle bar,** that passes through their upper ends. These drop wires, as shown in Fig. 2, have a slot *a* at their upper end through which the heddle bar passes, while below the slot is placed an eye *b* through which the warp end is drawn. Fig. 3 shows the complete mechanism employed to stop the loom in case an end breaks. In studying this illustration, which simply shows the parts of the warp stop-motion, reference should also be made to Fig. 1 to such of these parts as are shown in connection with the loom. Situated near the front and at the foot of the loom is a rod p_4 carrying a casting p_5 through a slot in which the lower end of the shipper rod extends, as shown in Fig. 3. Setscrewed to this rod p_4 is another casting carrying a rod p_1, which extends toward the back of the loom and is curved at this end, forming a collar that passes around the cam-shaft t; its upper end is shown at p_2. Forming a part of the same casting with the arms p_1, p_2 is a bracket p_3 that serves as a support for the short shaft x, on which are three distinct parts: the knock-off dog k_1, which is setscrewed to the shaft; a casting k, which is loose on the shaft and carries a knock-off dog similar to k_1 (not shown in the illustration) and a rod n_2; another casting n, which is setscrewed to the shaft x and carries a finger n_1, known as the cam-follower, and a

FIG. 2

Digitized by Google

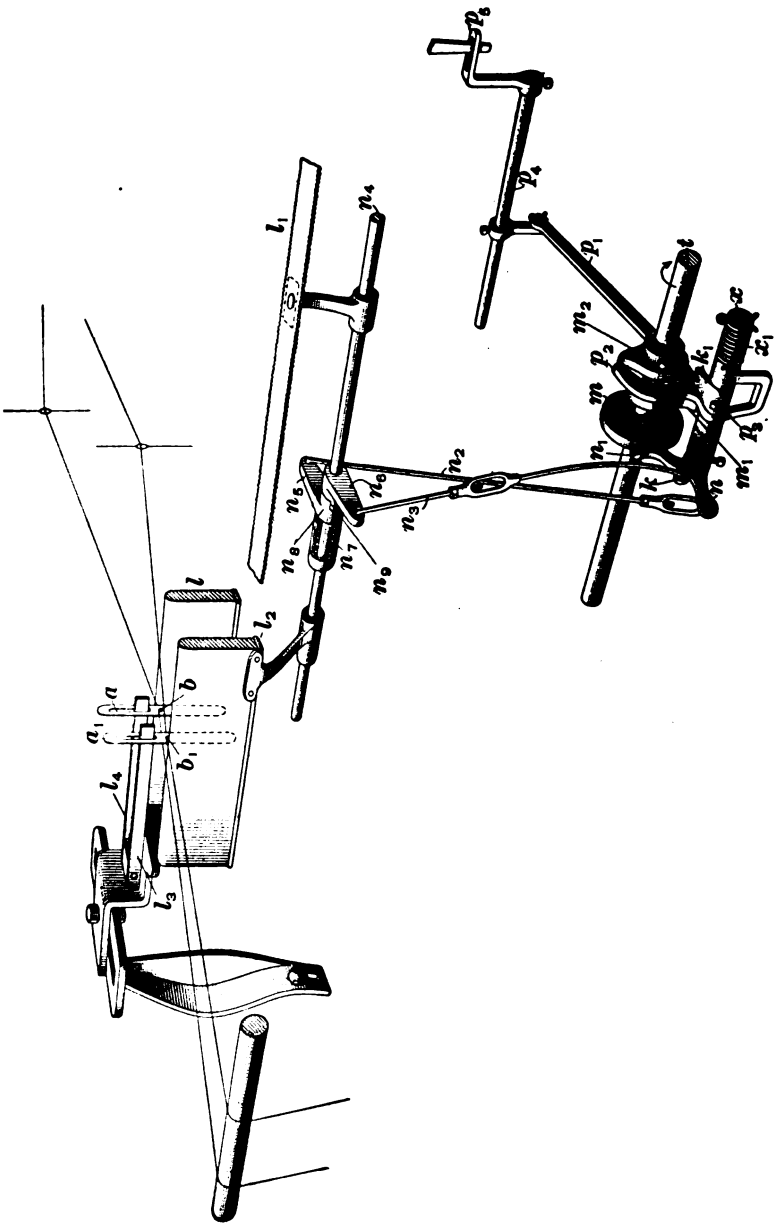

FIG. 3

Digitized by Google

rod n_2. On the cam-shaft t are also placed two castings m_1, m_2 and a cam m. The cam-follower n_1 is kept pressed against the cam m by means of the spiral spring x_1, one end of which is attached to the bracket p_2, while the other end is attached to a collar that is fast to the shaft x; consequently, when the cam m is acting on the cam-follower n_1 from its heel to its toe, the follower n_1 is being forced out positively by the cam m, while on the other hand, in passing from the toe to the heel of the cam, the spring x_1 is causing the follower n_1 to follow the cam m. The rods n_2, n_3 are connected at their upper ends to castings n_5, n_6, respectively. The casting n_6 is setscrewed to the feeler shaft n_4, while the casting n_5 is loose on the shaft n_4 but is connected to a spiral spring n_7, which in turn is connected to a collar setscrewed to the shaft n_4. By this means, as the rod n_2 is forced down by the action of the cam m on the follower n_1, the casting n_5 acting through the spring n_7 will cause the shaft n_4 to make a partial revolution, and in making the partial revolution will cause the rod n_2 to rise, since the casting n_6 is setscrewed to this shaft. On the other hand, when the rod n_2 is raised, which action takes place by means of the spring x_1 when the cam-follower n_1 is passing from the toe to the heel of the cam m, a projection n_8 on the casting n_5 engaging with a projection n_9 on the casting n_6 causes the rod n_2 to be lowered and the shaft n_4 to make a partial revolution in the opposite direction to that in which it moves when the rod n_2 is lowered. By this means the feeler shaft n_4 is given an oscillating motion. A casting carrying the feeler bar l_1 is setscrewed to this shaft; consequently, as the shaft n_4 oscillates, this feeler bar l_1 also receives an oscillating motion. It is situated directly beneath two castings l, l_2, known as *stop-motion girts*, which are a part of a casting that is bolted to the framework of the loom; this casting also carries the drop-wire bars l_3, l_4 that pass through the slots a, a_1 of the drop wires.

It should be understood that the feeler shaft n_4, feeler bar l_1, and stop-motion girts l, l_2 extend from one side of the loom to the other. They are shown broken in Fig. 3 in order that the different parts may be more clearly represented,

Digitized by Google

4. The action of this mechanism is as follows: Suppose the warp end that is drawn through the drop wire supported by the bar l_3 breaks. In this case the drop wire falls until the upper end of the slot a_1 comes in contact with the bar l_3. This allows the drop wire to fall far enough to drop between the feeler bar l_1 and the stop-motion girt l_5, which prevents the feeler bar l_1 and the feeler shaft n_4 from oscillating. Since at this point the motion of the feeler bar l_1 is being obtained by means of the spring x_1 causing the follower n_1 to be pressed against the cam m, it is only the action of the spring x_1 that must be overcome by the drop wire. In the other case, that is, when the drop wire supported by the bar l_4 is allowed to fall because of the breaking of the warp end that is drawn through this drop wire, the drop wire will be trapped between the feeler bar l_1 and the stop-motion girt l. In this case the cam-follower n_1 is being positively acted on by the cam m, but since the rod n_2 and casting n_3 act on the feeler shaft n_4 through the aid of the spring n_{11}, then in this case it is simply the tension of the spring n_7 that must be overcome by the drop wire. In any case, when an end breaks and a drop wire comes between the feeler bar and stop-motion girt, one of the knock-off dogs on the shaft x comes in the path of either the casting m_1 or m_{11}, causing the entire casting carrying the arms p_1, p_2 to be pushed back. As the arm p_1 is brought back it turns the rod p_4, which, giving a partial revolution to the casting p_3, throws the shipper handle from its retaining notch and stops the loom.

The somewhat complicated arrangement for stopping the loom when an end breaks is necessitated because of the fact that the drop wires, being exceedingly light, require that the loom shall be stopped without bringing any great strain on them when they become trapped between the stop-motion girts and the feeler bar. In order to further eliminate the danger of the drop wires becoming bent when an end breaks, the two sides of the feeler bar l_1 that come in contact with the drop wires are serrated, and thus hold the drop wires in such a manner that their edge and not their flat side will be brought in contact with the stop-motion girts.

Digitized by Google

STEEL-HARNESS STOP-MOTION

5. When a **steel-harness stop-motion** is applied to the loom, the warp ends, instead of being drawn through the regular harnesses, are drawn through flat pieces of steel that serve as heddles and that are supported by a bar, known as the heddle bar, passing through their upper ends. The heddle bars serve as a part of the framework of the harness, and are connected at their ends by side pieces that are connected directly to the harness jacks. Fig. 4 illustrates this style of heddle, which is also shown suspended in Fig. 6. The heddle bar l, passes through the slot a, while the warp end is drawn through the eye b; the lower end of this heddle hangs loose and is kept in place by passing between the stop-motion girt l and rods.

FIG. 4

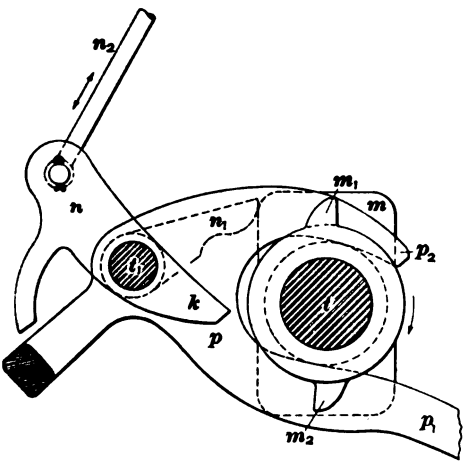

FIG. 5

Fig. 5 shows the lower connections of the steel-harness stop-motion. On the cam-shaft t is placed a cam m that has the projections m_1, m_2 cast on one side. The casting p carries two arms p_1, p_2, forming a link that slides over the cam-shaft t in a similar manner to that described in connection with the cotton-harness stop-motion. Supported by the

Digitized by Google

casting p is the shaft t_1 on which is setscrewed the cam-follower n_1, which is kept pressed against the cam m by means of a coil spring. Setscrewed to the same shaft is the knock-off k, which is a part of the casting n that carries the connecting-rod n_3. The arm p_1 forms a connection with the shipper handle of the loom in the same manner as previously described.

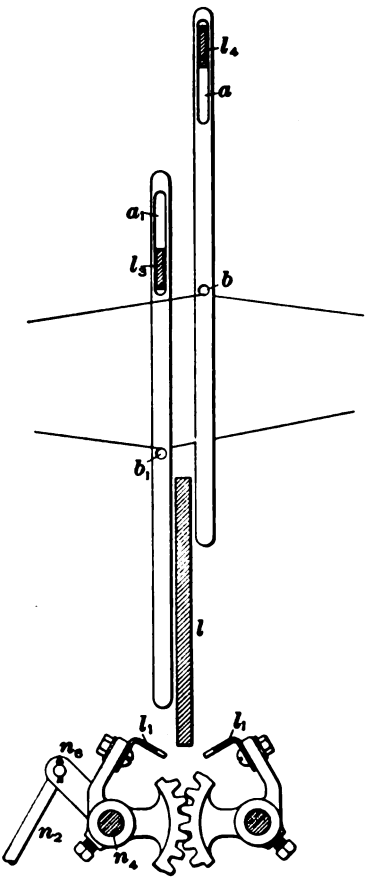

FIG. 6

Fig. 6 shows the connection of the rod n_3 at its upper end to the feeler shaft n_4. The shaft n_4 carries a quadrant gear that gears into another quadrant gear on a shaft similar to n_4 that carries another feeler bar l_1. This arrangement is such that both feeler bars l_1 move toward the stop-motion girt l when the follower n_1 is passing from the toe to the heel of the cam; consequently, in this case, when a warp end breaks and the drop wire becomes trapped between the stop-motion girt l and the feeler bars l_1, it is simply the action of the spiral spring on the shaft t_1 that must be overcome. In this case the cam-follower n_1 is prevented from following the cam m and the knock-off dog k is brought in the path of one of the projections m_1, m_2. This causes the casting p, with all its parts, to be pushed back, bringing the arm p_1 with it and pushing the shipper handle from its retaining notch by the same means as described in Art. **3**.

Digitized by Google

FILLING-CHANGING MOTIONS

6. As previously stated, the object of all **filling-changing motions** is to supply fresh filling to the loom in case the filling breaks or runs out. In the Northrop loom this is accomplished by automatically ejecting from the shuttle the empty bobbin and inserting in its place a full bobbin, which is taken from a supply constantly held in reserve by mechanism known as the **hopper.** Referring to Fig. 1, parts of the hopper are shown at k, k_1, k_2, k_3, and, as will be seen, this hopper contains a number of bobbins filled with yarn. A full description of this hopper will be given later, it being sufficient to state here that as the bobbin that is carried by the shuttle becomes empty, or in case the filling breaks, the bobbin is ejected from the shuttle and a fresh bobbin taken from the hopper and inserted in its place. This hopper arrangement is acted on primarily by the filling stop-motion, and taking the different parts in the order in which they act, this motion will be described first.

7. Filling Stop-Motion.—Fig. 7 is a view of the filling stop-motion used on the Northrop loom, which, it will be

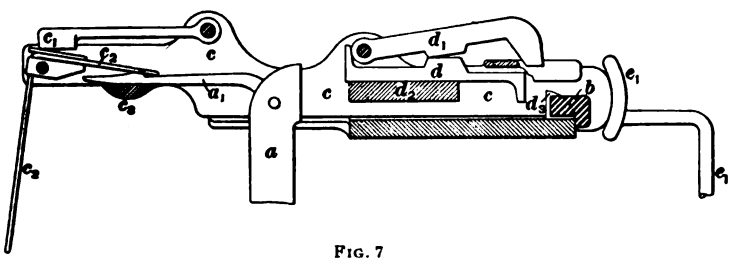

FIG. 7

noticed, differs very materially from the one found on the ordinary plain loom. The different parts of this motion are attached to the filling-fork slide c. The finger a is worked by the cam on the cam-shaft similarly to the ordinary plain loom, and has attached to it, by a pin, a filling-motion hook a_1, which is shown engaged with a slot in the filling

Digitized by Google

fork c_2. This filling-motion hook is supported at its outer end by the casting c_3. A brass attachment c_1 serves as a weight for the filling fork, thus preventing it from lifting too high; another piece of brass d, on which is a projection that supports the dog d_1, moves back and forth on the casting d_2. The filling fork is so constructed that, when the absence of filling is first detected, it will turn a rod placed beneath the breast beam known as the *starting rod*. This causes the filling to be changed without stopping the loom.

The operation of this mechanism is as follows: When the shuttle is thrown across the loom without the filling, the prongs of the filling fork c_2 will not be disturbed; consequently, the projection on the filling-motion hook a_1 will engage with the slot in the filling fork, and, as the finger a is forced back by the cam, it will bring with it the slide c, since the filling fork is attached to this slide. The casting d, however, will be stopped by the projection d_2 when the entire slide has moved sufficiently to allow the dog d_1 to escape the lever b that operates the shipper handle. The end of the slide c will come in contact with the lever e_1 fastened to the starting rod, and the filling-changing device will be set in operation. By means of this device a new supply of filling will be placed in the shuttle to replace that broken or exhausted, and consequently when next the shuttle passes the filling fork, the latter will be raised as usual.

However, should the filling again be absent on the next pick the loom will be stopped in the following manner: When the finger a is moved inwards by the cam, the slide c will be forced into its original position by the lever e_1, which is kept pressed against it by a spring on the rod connecting with the filling-changer; but as the slide is pushed inwards, bringing with it the dog d_1, the projection on this dog will engage with the projection on d, thus pushing it inwards and allowing the dog d_1 to remain down. As the slide c is again forced outwards on the next pick by the action of the hook a_1 engaging with the filling fork, the dog d_1 will engage with the lever b, which during the previous

Digitized by Google

operation it missed, owing to its being supported by d. The lever b being acted on by d_1 will throw off the shipper handle, thus stopping the loom.

On the other hand, should the filling-changing device act properly on the first operation of the filling stop-motion, the loom will continue to run, since the hook a_1 at its next outward movement will miss the filling fork, owing to the fork being raised by the filling. The end of the finger a will come in contact with d, pushing it into its position and raising d_1, thus placing the different parts in their original positions.

8. Connection Between Filling Stop-Motion and Hopper.—Fig. 8 shows the connection between the filling stop-motion and the hopper, or magazine, that supplies fresh filling. The lever e_1 is here shown connected to the starting rod e, which rests in supports placed under the breast beam. At the other end of the starting rod is shown a spring e_2 that serves to hold the lever e_1 in position, by keeping it firmly pressed against the back of the filling-fork slide. On the first pick that the filling is absent, the filling-fork slide will press back the lever e_1, which will turn the rod e and extend the spring e_2.

Referring to Fig. 10, the object of extending the spring e_2 is to allow the latch finger g to come in such a position that the bunter g_6, which is connected to the lay of the loom, will engage with it. The manner in which this is accomplished is more clearly shown in Fig. 9, which shows some of the parts of this motion that are situated on the inner side of the framework of the loom. Certain of the parts shown in Fig. 10 are removed in Fig. 9, in order that the parts shown in this figure may be more clearly represented. The rod e acts on the spring e_2 through the arm e_3, one end of which rests upon the projection g_5 carried by the casting g_4. The latch finger g, being acted on by a coil spring, has a tendency to be pushed inwards and upwards. The finger g_5 is secured to a stud carried by the casting g_4 and bears against the pin g_1 on the latch finger g. The action of the arm e_3

Digitized by Google

resting on the projection g_3 causes the finger g_4 to prevent the latch finger g from occupying the position it naturally

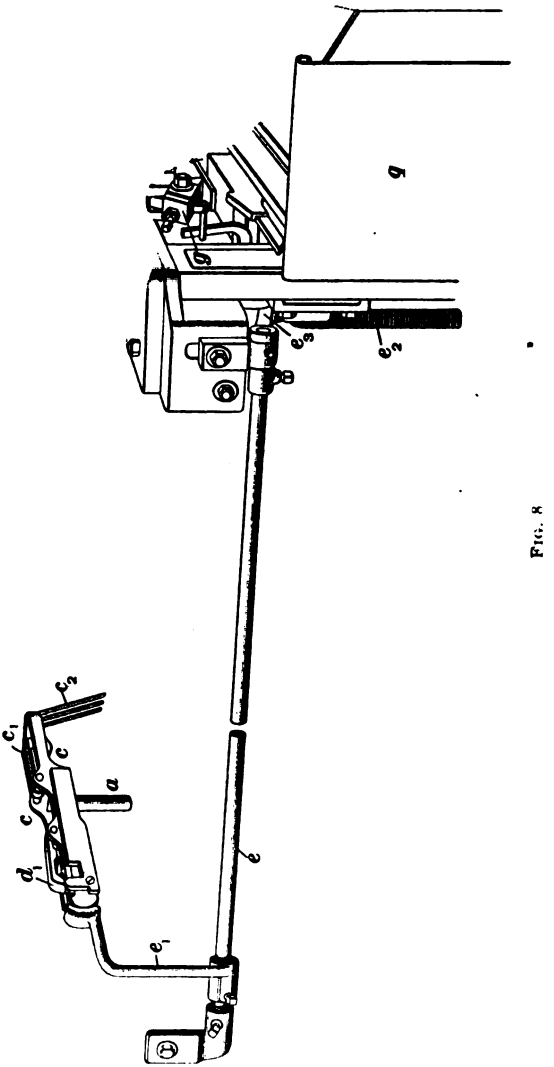

FIG. 8

would if no force were acting on it contrary to that of its coil spring. The different parts of this mechanism are shown as

Digitized by Google

they appear when the filling-fork slide is pressed against the finger e_1 and causes the spring e_2 to be extended.

Fig. 10 shows the connection between the latch finger and the transferrer h, which pushes the full bobbin into the shuttle. This figure also shows the inner plate k of the hopper, which is shown in full in Fig. 1. This plate serves to hold the heel of the bobbin, which is also shown in Fig. 10. The projection on the transferrer h rests directly

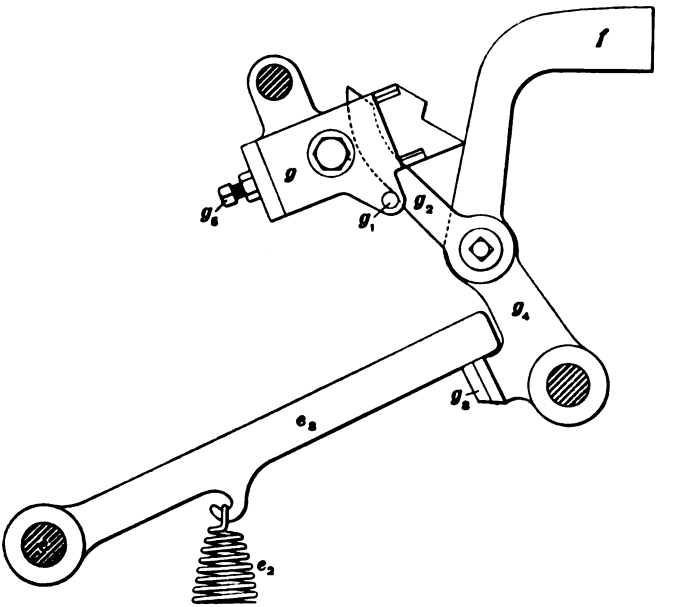

FIG. 9

upon the heel of the bobbin, while the transferrer fork, which is connected to the transferrer h at the point h_4, extends the length of the bobbin and rests upon its nose. Thus, if any force acts on the transferrer h to push it down it will, aided by the transferrer fork, push the bobbin from the hopper.

9. The operation of this mechanism is as follows: When the filling is absent, the filling fork is not raised, and consequently the filling-motion hook will engage with the slot in

Digitized by Google

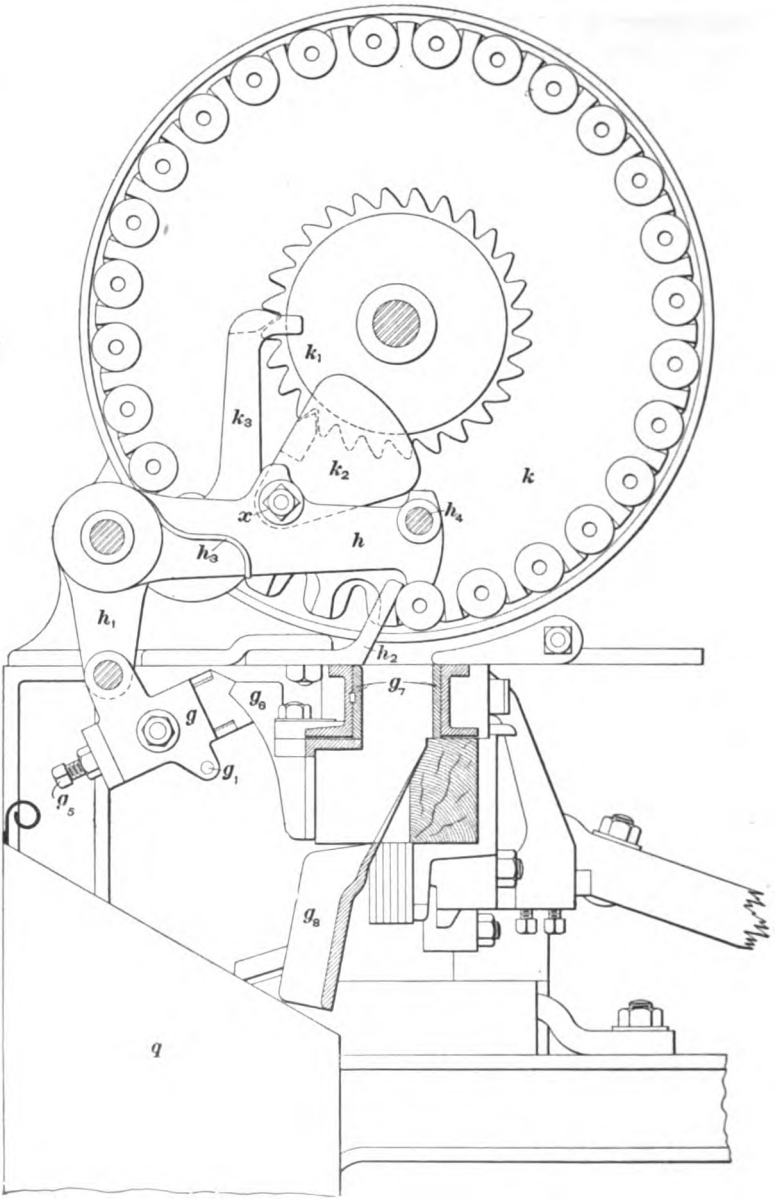

FIG. 10

Digitized by Google

the filling fork and push the slide backwards; this movement will cause the slide to come in contact with the lever e_1, Fig. 8, which will turn the starting rod e and raise the end of the arm e_3, Fig. 9, thereby extending the spring e_4. This movement will allow the spring that is constantly working on the latch finger g, Fig. 9, to throw this part of the mechanism inwards and upwards, thus bringing it in position to engage with the bunter g_6, Fig. 10, fastened to the lay of the loom. The latch finger in being pressed back by the bunter as the lay comes forwards, will throw the transferrer h downwards, thus causing it to push a bobbin of filling from the hopper k into the shuttle g_7, Fig. 10, which at this point should be directly under the bobbin to be inserted. As the full bobbin is pressed into the shuttle by the transferrer it will come in contact with the bobbin held by the shuttle, pushing this bobbin through the bottom of the shuttle and placing the new bobbin in its correct position. The bottom of the shuttle, as will be described, has a space sufficiently large to allow the bobbin that is to be ejected to pass through it, the bobbin then coming in contact with the chute g_8, which guides it into the receptacle q placed to receive these bobbins.

As the transfer of the bobbin is made while the loom is running at its regular speed, it will be seen that it is very essential to have the shuttle in an exact position when the transfer takes place. In some cases, the shuttle may be rebounding in the box, and if there were not some arrangement by means of which the operation of this mechanism could be stopped at such times, certain parts would be subjected to a severe strain. This is guarded against by the shuttle feeler f, Fig. 9, which acts as follows: When the spring e_4 is extended by means of the starting rod being turned, and allows the coil spring on the latch finger g to bring this part of the mechanism forwards, the pin g_1 will push the finger g_5 forwards, which movement will throw the shuttle feeler f forwards, so that it will occupy a position directly in front of the box when the lay is brought forwards. However, should any part of the shuttle be projecting from

Digitized by Google

the box, it will come in contact with the shuttle feeler *f*, pushing it back and lowering the latch finger *g*. The bunter on the lay, in coming forwards, will consequently miss the latch finger, and a new bobbin of filling not being supplied to the loom, the filling stop-motion will again operate and this time stop the loom.

10. Hopper.—The hopper, or magazine attachment, is always situated at the right-hand side of the loom, and is so constructed that it will hold twenty-four full bobbins, or cops, a space equal to that occupied by four bobbins having to be left empty at that point where the transferrer is situated. The object of the hopper is to bring a bobbin, or cop, of filling into the correct position to be acted on by the transferrer. Referring to Fig. 1, the heel of the bobbin is placed in a recess in the plate k, while the nose is pressed into a spring attached to the plate k_4; the end of the filling is then passed over a plate k_5 and attached to the stud k_6 of the hopper. In this manner the bobbin is held firmly in the magazine, and yet not so firmly but that it may be easily pressed out and into the shuttle when it is required to change the filling. As the end of the filling is attached to the stud k_6, it will be held in this position when the shuttle is driven across the loom for the first pick after the bobbin has been inserted.

The manner in which the hopper is turned and brings a new bobbin into the required position after the preceding bobbin has been inserted in the shuttle may be understood by referring to Fig. 10, which shows a view of that side of the plate k in which the heel of the bobbin is inserted. On the face of this plate is attached a ratchet k_1, in the teeth of which works the pawl k_2, which is fastened to the transferrer h by a bolt and nut x. When the transferrer is thrown down by the action of the bunter g_6 engaging with the latch g, it brings with it the pawl k_2, which being made large, as shown in this figure, has sufficient weight to fall forwards as well as downwards each time it becomes disengaged from a tooth of the ratchet. When the lay swings back, the transferrer is pushed up by a

Digitized by Google

coil spring h_3 and brings with it the pawl k_3, which engaging with the ratchet, turns the hopper until the next bobbin comes in contact with the casting h_3, which is so placed that it allows the hopper to turn just far enough to bring the bobbin in the exact position it should occupy to be pushed into the shuttle. The pawl k_3, which is fastened to the framework of the loom, prevents the hopper from turning in the opposite direction and, consequently, acts simply as a stop-pawl.

11. Shuttles.—Fig. 11 shows a type of **shuttle** used in the Northrop loom. It is self-threading and does not contain any spindle to hold the bobbin b in place, but is so constructed that the bobbin can pass into the shuttle a at the top and out through the bottom. In the end of the shuttle opposite that in which the eye is placed, is the shuttle spring a_1, which extends to both sides of the shuttle. This spring has notches in each side into which rings b_1 on the bobbins are forced, thus holding the bobbin in position. If the shuttle should chance to be too far in the box when the bobbin is being forced into it, the bobbin will strike the bent piece of steel a_3 placed between the spring. This is inclined at one end so that, as the bobbin strikes this inclined slide, either the bobbin itself will be forced forwards into position or the shuttle will be forced back until it is in the correct position to receive the bobbin.

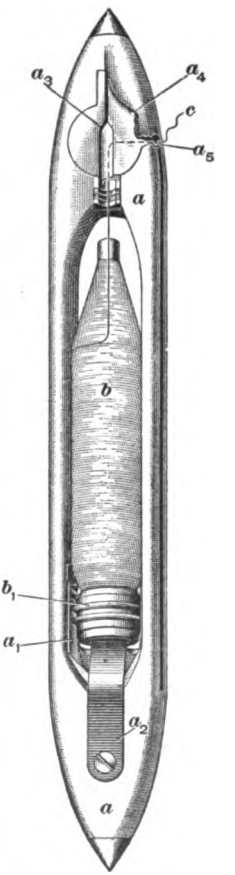

FIG. 11

The manner in which this shuttle threads itself is as follows: After the bobbin has been placed in it, the shuttle is driven across the lay, but the end of filling is held by being wound around the stud of the hopper, so that the

Digitized by Google

filling will be unwound from the bobbin. In doing so, it will drop into the slot a_3 that runs lengthwise of the shuttle. The shuttle will next be driven across the loom in the opposite direction; the filling will drop into another slot a_4 and pass through the shuttle eye a_5, thus completing the operation of threading the shuttle, the filling c occupying the position shown in Fig. 11. This shuttle eye is designed to prevent, as far as possible, the filling from being thrown forwards and escaping from the slot, or horn.

12. Bobbins.—Fig. 12 gives a view of the bobbin used in this shuttle, which differs somewhat from those found in

FIG. 12

the ordinary shuttle. At its lower end are placed two rings b_1 that fit in the notches in the spring in the shuttle and thus hold the bobbin in the shuttle during the time that the filling is being taken from it and placed in the cloth.

Owing to the contraction and expansion of bobbins in the weave room it would be a disadvantage to have these rings in one piece; on this account they are split and put on the bobbin so that they will allow the bobbin to contract or expand. It will be readily noticed that it will not be pos-

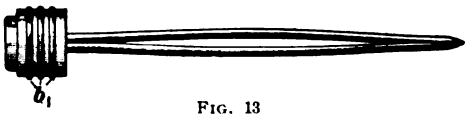

FIG. 13

sible for these rings to be perfectly round at all times, and it might naturally follow that they would not always fit perfectly into the grooves in the shuttle spring. To obviate this difficulty, the rings are so applied to the bobbin that the slots will not be opposite or together; thus, one ring will offset the other more or less.

13. Skewers.—Fig. 13 is an illustration of a **skewer,** on which is placed the cop when using cop filling. In

Digitized by Google

weaving with this filling, more care should be taken in setting the pick, in order to obtain as light a pick as possible, since the shock due to the sudden stopping of the shuttle very often causes the filling to break or several coils to slub off the nose of the cop, consequently making a serious amount of waste.

A long shuttle box is also placed on these looms in order to aid in checking the shuttle more gradually.

ADDITIONAL ATTACHMENTS ON AUTOMATIC LOOMS

14. In addition to the parts of this loom that differ in construction from those found on the plain loom, and that have already been described, there will be found others that, although they cannot be said to be of vital importance, contribute to the successful running of the loom.

If it is remembered that the filling is changed while the loom is running at its regular speed, without stopping any of the rapidly revolving parts, the importance of having the shuttle in the exact position to receive the new bobbin will readily be understood. An aid in regulating the position of the shuttle for this purpose is the connection made on this loom between the crank-arm and the lay, which, instead of consisting of a simple strap and pin as on the ordinary plain loom, has an eccentric, by means of which it is possible to regulate exactly the distance that the lay will come forwards; therefore, if the shuttle is a little behind or ahead of the exact position it should occupy when the transfer takes place, it may be given its exact position by simply turning the eccentric.

15. Temple.—As already explained, the end of the filling is attached to a stud on the outside of the hopper; consequently, when a new bobbin is transferred to the shuttle, there will be an end of the filling extending from the stud to the selvage of the cloth, which would detract from the good appearance of the cloth if allowed to remain. To prevent this, the **temple**, shown in Fig. 14, that is placed

Digitized by Google

on the hopper side of the loom is provided with an attachment that severs this end of filling and leaves the selvage free of any loose threads. The only parts that differ from those found on the ordinary plain looms are the blades r and the arm r_1.

The operation is as follows: The blades of the cutter are kept up out of the way of the filling until the lay comes forwards and strikes the arm r_1 of the thread cutter, thus forcing down the blades r, catching the filling between the temple and the blades, and cutting it close to the selvage.

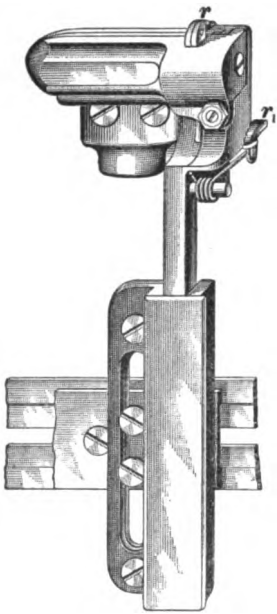

FIG. 14

16. Take-Up.—Another device found on this loom is the high **take-up roll** for winding down the cloth, shown in Fig. 15. The cloth, instead of passing over the breast beam, passes over a roller, behind the breast beam, and then on to the cloth roller, which is placed directly beneath the first roller. This arrangement allows more space for the fixer when fixing any of the mechanism beneath the loom. Another advantage is that the cloth, when wound down in this manner, will be of a more uniform width. When the take-up is some distance from the fell of the cloth, there is an opportunity for shrinking or wrinkling that does not exist when the cloth is stretched over the rough surface of the roll almost immediately after it is woven. Another advantage is that the breast beam comes outside of the cloth, thus protecting it from any blemish that is liable to result when the weaver leans over the loom in the act of drawing in ends.

Referring to Fig. 15, s is a handle fastened to a shaft on which is the worm s_1, meshed with which is the worm-

Digitized by Google

gear s_2, which is loose on the gear-shaft s_3. On the end of the gear-shaft is another gear u, which works in the teeth of the vertical rack u_1. This rack supports a bearing in which rests the cloth roller. The gear-shaft extends nearly the entire length of the loom, and contains the same mech-

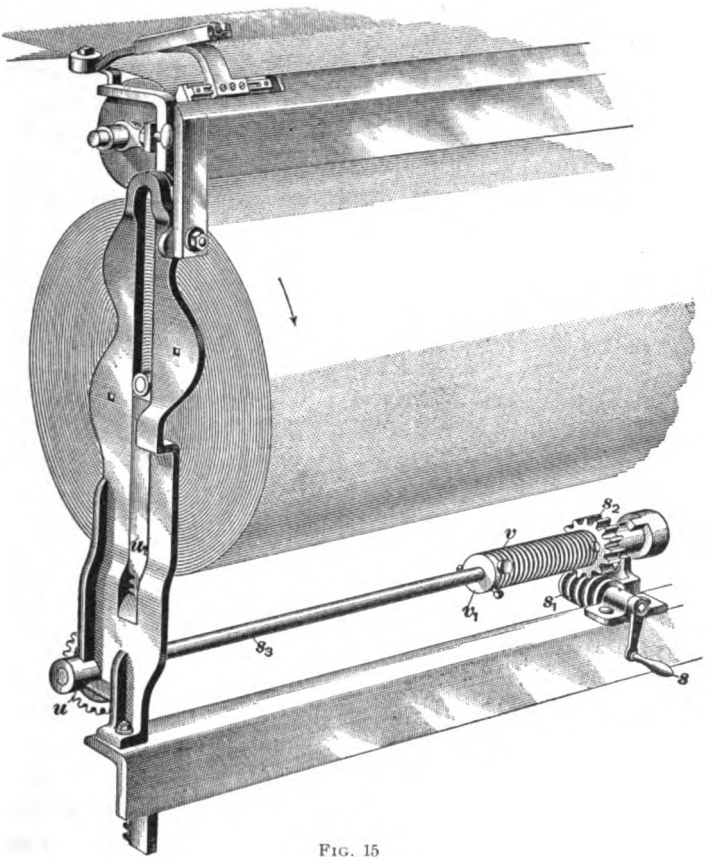

FIG. 15

anism at each side supporting both ends of the cloth roller, one side only being shown in the figure.

As stated, the gear s_2 is not fastened to the gear-shaft, but simply works on it. Fastened to the hub of this gear, however, is one end of the coil spring v, while the other end is

Digitized by Google

connected to the collar v_1 that is setscrewed to the shaft; consequently, the tension of the spring will counterbalance the weight of the rack and cloth roller. As the cloth is wound on the roll, the roll naturally becomes larger and forces the rack u_1 down, thus turning the shaft s_3 and tightening the spring v. In this manner the cloth is wound firmly on the roll.

When it is desired to remove the woven cloth, the handle s is turned to the left, which loosens the spring and allows the weight of the cloth roller to cause the rack to drop. In order to raise the cloth roll into position again, the handle s is turned to the right; this tightens the spring and causes the gear-shaft to revolve, thus turning the gear and lifting the rack and, consequently, the cloth roller.

17. One-Hand Design.—Northrop looms are always made **one-hand**; that is, in all cases the shipping mechanism and take-up gears are found at the left, while the hopper and its different parts are placed at the right of the loom. It is, of course, necessary to place the pulleys of some looms on the right-hand side in order to meet the requirements of the belting, so that in some cases the shipper handle will be at the left of the loom while the pulleys are found at the right. When this is the case, the belt is shifted by means of a cross-connection extending from the shipper handle to the belt fork. This arrangement allows all the different parts of the loom, without regard to which side of the loom the pulley may be attached, to always be one-hand.

FIXING

18. The many additional parts found on the Northrop loom will necessitate additional care on the part of the fixer, especially as these different parts require exactness in setting in order that they may perform their work at the proper time and without the breakage of any of the several parts. In dealing with the setting and timing of the motions of this loom, those parts that are duplicated in the ordinary plain loom, such as the harness cams, pick cams, etc., will not be considered.

Digitized by Google

19. Setting the Warp Stop-Motion.—The instructions, and also the letters of reference, given in connection with setting the different parts that automatically stop the loom when a warp end breaks, apply equally well to the motions shown in both Figs. 3 and 5. First knock off the belt and place the shipper handle in its retaining notch. This will bring the different parts of this motion into the same position that they occupy when the loom is running. With the shipper handle in this position, the link formed by the arms p_1, p_2, and which fits over the cam-shaft, should be pressed firmly against its bearings. After regulating this part of the motion, turn the loom over and see that the cam-points do not come in contact with the knock-off dogs. These parts may be regulated by means of the setscrews by which the knock-off dogs are connected to the shaft, or they may also be regulated by means of lengthening or shortening the connecting-rods. In some cases the cam that actuates the cam-follower is secured to the harness cams by means of a clutch; consequently, all that is necessary when setting this cam is to set the harness cams to give the correct shedding motion. After regulating the position of these different parts, allow one of the drop wires to assume the position it would take if the end drawn through it should break; turn the loom by hand and see that one of the projections engages properly with the knock-off lever and throws the shipper handle out of its retaining notch. With both motions shown in Figs. 3 and 6, the position of the feeler bars should be carefully regulated. With the motion shown in Fig. 3, the feeler bar l_1, when it has moved through half the space traveled, should be in the center between the girts l, l_2, so that it will move the same distance in both directions from this point. This can be accomplished by regulating the connecting-rods n_2, n_3, or by moving both parts n_5, n_6 on the shaft n_4. With the motion shown in Fig. 6, the feeler bars l_1 should move just sufficiently toward the girt l to trap the heddles when an end breaks. They should be in this extreme forward position when the follower n_1, Fig. 5, is bearing against

Digitized by Google

the lowest part of the cam *m*, and may be regulated by means of the connecting-rod *n*, or by adjusting the feeler bars on their shafts.

Care should be taken to have the spring that keeps the follower pressed against the face of the cam tight enough to enable the follower to be at all times in contact with the cam; yet this spring should not be so tight that the drop wires will be bent in case they become trapped between the feeler bar and the stop-motion girt.

20. Setting the Filling-Changing Motion.—When timing the parts of this loom that automatically replenish the filling, it is very essential to set the filling fork and its different parts in such a manner that they will work to the best advantage, since the successful operation of the other motions are dependent on the manner in which the parts of the filling fork operate. With the shuttle in the box, but without any filling in the shed, turn the loom until the crank-shaft is on its front center. When in this position, have the prongs of the filling fork pass through the grid without touching in any manner the sides of the grid; also, see that the filling-motion hook engages properly with the fork and pushes the slide backwards, thus turning the starting rod. Continue to turn the loom until the bunter on the lay engages with the latch finger. As this finger is pushed back by the bunter, the transferrer fork will commence to push the full bobbin from the hopper into the shuttle.

At this point, the transferrer should be directly over the opening in the top of the shuttle. If it is not in the correct position and the difficulty is with the fork, it may be bent into the desired position. Should the lay, however, bring the shuttle too far forwards, or not far enough, this difficulty may be remedied by turning the eccentric that connects the crank-arms to the lay swords.

At the point where the transferrer completes its work of inserting the bobbin, it should press lightly on the bobbin. As the distance that the transferrer moves through is determined by the distance that the latch finger is pressed back

Digitized by Google

by the bunter, it will be seen that if the transferrer presses on the bobbin too hard, it may be regulated by setting the latch finger back by means of the adjusting screw g_4, Fig. 9. On the other hand, if the transferrer presses too lightly, the latch finger may be moved forwards.

When regulating the shuttle feeler, have the shuttle project from the mouth of the box on the side that contains the hopper. Turn the loom until the shuttle feeler is in contact with the shuttle, and then see that the bunter does not engage with the latch finger as the lay comes forwards. When the shuttle is well in the box and the lay is as far forwards as it will go, the shuttle feeler should be very close to the back plate of the box.

21. Position of the Shuttle.—It is very important that the shuttle be in exactly its correct position to receive the cop, or bobbin, as it is pushed in by the transferrer. Many things, however, will tend to interfere with the shuttle being in its correct position. For instance, the picker stick may not have enough power to throw the shuttle well into the box; or, on the other hand, it may have too much power, causing the shuttle to rebound.

If through any cause the shuttle is projecting from the box when the filling-changer is set in motion, the shuttle feeler should prevent the transferring of the bobbin, but there is another defect that should be carefully noted. The picker may be so badly worn that it will allow the shuttle to go too far into the box. This should be carefully watched, and when the picker becomes worn it should be replaced by a new one or an extra piece of leather placed on the lay end, thus compensating for the wear and preventing the picker stick from moving so far back.

22. Hopper Adjustment.—The spring h_3, Fig. 10, that turns the hopper should be carefully regulated in order that no strain may be brought on the different parts when a new bobbin is brought into place. Care should also be taken that, when running the loom, the spaces in the hopper for inserting the bobbins are not left empty, since in this

Digitized by Google

case there is certain to be more or less jar on the different parts when a fresh bobbin is brought into position to be acted on by the transferrer.

CLOTH DEFECTS

23. Many of the common **defects** found in cloth woven on an ordinary plain loom, especially warp ends out, are greatly lessened by means of the automatic attachments found on the Northrop loom, while at the same time there will be found defects in cloth woven in this loom that will not appear in cloth produced by the ordinary plain loom. These defects, although they cannot be said to occur frequently, do appear at times, and it is always well to understand their cause.

In some cases, a heavy pick of filling will show in the cloth and have the appearance of a cord running entirely or part way across the cloth. This may appear to be, and in fact may be, due to the filling being given off by the bobbin in a large quantity, while in other cases it may be due to the ends of filling that have been cut by the temple. When the bobbin is placed in the hopper, the end is passed around the stud on the outside of the magazine; consequently, when the filling is cut close to the selvage, a thread several inches in length is left hanging to the stud. After a time several ends will collect in this manner, which, if not removed by the weaver, are liable to be caught by the lay and carried through the shed by the shuttle, thus causing a bunch of filling to appear in the woven cloth.

Another defect that will have the opposite effect—that is, picks missing—is sometimes due to the filling-cutting arrangement on the temple being improperly set. In some cases, these blades will be set in such a manner that they will cut the filling as the shuttle is entering the box on the magazine side of the loom. When this happens, the pick of filling will be wanting as the shuttle is again driven across the loom, but the end hanging from the shuttle will be caught by the selvages on the opposite side of the loom as they change;

Digitized by Google

consequently, the filling will be inserted again on the next pick; thus, only every other pick of filling will be inserted in the cloth.

In some cases, the shuttle on the Northrop loom will not thread itself when a new bobbin is inserted. This is due in almost every case to the eye of the shuttle being clogged, through lint or some other foreign substance gathering in it. This is easily remedied. At other times, the shuttles may be stopped so suddenly that the filling will be thrown forwards in such a manner as to unthread itself. If this occurs when the shuttle is in the box on the end away from the magazine, the filling will be broken, since the shuttle must be moving away from the hopper when it commences to thread itself. The filling-changing motion will consequently operate, and a bobbin with yarn on it will be ejected from the shuttle.

WEIGHT AND POWER

24. A Northrop loom will weigh a little more than the ordinary plain loom, while the power necessary to drive it has been estimated to be about $\frac{1}{4}$ horsepower. A test was made with looms running 190 picks per minute and it was found that these looms averaged $3\frac{3}{4}$ looms to 1 horsepower. This test does not include the power necessary to drive the shafting.

Digitized by Google

OTHER TYPES OF AUTOMATIC LOOMS

25. The previous description of automatic looms does not exhaust all the devices that have been invented for the purpose of running looms more automatically, either in regard to filling-changing devices or arrangements for detecting broken threads of warp. These advantages are so desirable that their attainment has been the object of many inventions. The Northrop loom described differs considerably from the earlier patterns of the same loom, the experience gained in the operation of these having led to many improvements from time to time.

The loom described changes the filling by removing the bobbin, or cop, from the shuttle and replacing it with a new bobbin, or cop, but other types that have been tried and found practicable to a certain extent are so constructed as to change the shuttle. One device provides for automatically sliding the shuttle containing the empty bobbin out of the shuttle box when the filling runs out or breaks, and replacing it with another shuttle containing a full bobbin; this is sometimes spoken of as the *shuttle-shifting arrangement*, the change being made without stopping the loom. Another method provides for the changing of the shuttle in similar cases, but the loom is automatically stopped, the change of the shuttle made automatically, and the loom automatically restarted. This is the principle adopted on the Harriman loom. As the Northrop arrangement is the one that has been most largely adopted, it is the one that has been selected for full description, as it would be impossible to describe all arrangements for filling-changing that have been used and discarded or that are now in use.

26. The same remarks apply to warp stop-devices, very many of which have been introduced from time to time. The arrangement that has been described is known as a

Digitized by Google

mechanical warp stop-device; but there are many other types of mechanical devices, almost all of which (like the one described) depend on the principle of a steel harness, a hook, or a pin supported by each warp thread dropping when the warp thread breaks and by suitable mechanism stopping the loom.

Electricity has also been utilized in warp stop-devices to a certain extent. In an electrical warp stop-device, certain parts of the loom are electrically insulated from one another and only brought in contact when the breaking of an end allows the pin that it supports to drop. These pins, which are made of brass or copper, complete the electric circuit, thereby enabling a current of electricity to magnetize a piece of soft iron, which attracts and changes the position of certain mechanisms and thus stops the loom.

27. In dealing with this subject it has been assumed that the filling-changing arrangement and the warp stop-motion are always used together, but this is not absolutely necessary. It is always customary, when the filling-changing device is used, to adopt some form of warp stop-motion to work in connection with it, but when using the warp stop-motion it is not necessary, or even always customary, to use the filling-changing device. Thousands of looms are in operation that are not provided with filling-changing devices, but are provided with either mechanical or electrical warp stop-motions.

Digitized by Google

Digitized by Google

DOBBIES

INTRODUCTION

1. When harnesses are employed, all the warp ends that are drawn through any one harness are raised and lowered together as that harness is raised and lowered; that is, each warp end drawn through this harness is manipulated in exactly the same manner as every other end drawn through it. The number of harnesses that can be operated by a cam-loom is limited by the amount of space available for the cams; and as cams take up considerable room, it will readily be seen that cam-looms are limited to a small number of harnesses. It may also be stated that where looms are frequently changed from one weave to another it is necessary to keep a large variety of cams on hand, and in addition the changing of a cam-loom from one weave to another involves considerable work.

For these reasons it is not the general custom in America to run more than 6 harnesses in a cam-loom, and consequently not more than six different interlacings of the ends in the entire warp can be obtained, no matter how many ends the warp may contain. Therefore, when it is desired to weave a pattern in which it is necessary to manipulate more than 6 ends differently, some mechanism other than cams is used to operate the harnesses. If the number of ends that work differently exceeds 6 but does not exceed 25, a **dobby** is generally employed. The method of drawing the warp ends through the harnesses is the same for a dobby loom as for a cam-loom; consequently, the number of harnesses that

For notice of copyright, see page immediately following the title page

Digitized by Google

are used limits the number of ends that can work differently, the chief advantage of a dobby over cams being that with the former more harnesses can be manipulated. The adoption of 6 harnesses and 25 harnesses as the limits of the scope of a dobby is not arbitrary, as the numbers may vary somewhat, according to circumstances.

VARIETIES OF SHEDS

2. The manner in which the different mechanisms, employed to move the harnesses, form the shed in the loom will be found to differ largely; therefore, before dealing with the parts of the dobby it is advisable to describe the various kinds of sheds that are produced.

3. Open Shed.—Fig. 1 illustrates the positions occupied by the warp ends in **open shedding.** In this style of shed-

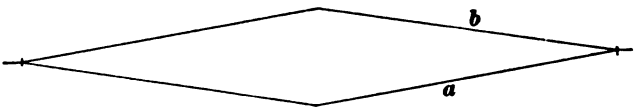

FIG. 1

ding, on one pick the warp ends form the top and bottom lines *b*, *a*. After the filling has been inserted, if there are any ends in the bottom line *a* that are required to be moved to the top line *b* on the next pick, these ends alone will be raised, while the remaining ends that form the bottom line will be left in this position. Similarly any ends in the top line *b* that are required to be moved to the bottom line *a* will be lowered, the remaining ends being held stationary at the top line *b*. Consequently, in this form of shedding only those ends that require changing are moved, and those ends that it is not necessary to change remain stationary. This form of shedding produces the least strain on the yarn, since the ends in the top shed are moved only when they are required to be down, and the ends in the bottom shed are raised only when they are required to be up. The least strain is also brought on the shedding mechanism of the

Digitized by Google

loom with this style of shedding, as the harnesses that are being lowered balance to a certain extent those harnesses that are being raised. This style of shed can also be formed in the least time, since there is no unnecessary movement given to the yarn.

4. Close Shed.—Fig. 2 illustrates the method of forming a **close shed.** In this style of shedding all the yarn assumes the position shown by the line *a* between each two picks of the loom. Thus, all the yarn that forms the top shed on one

FIG. 2

pick is lowered to the bottom shed after each pick, where all the yarn assumes the same position. Then those ends that it is desired to have up on the next pick are lifted to the top line *b*. Consequently, if any yarn on one pick assumes the position shown by the dotted line *b* and it is desired to have it assume the same position on the next pick, it must be lowered to the bottom shed and then raised again. It will be seen that with this form of shedding certain ends must move through twice as much space as is necessary with an open shed.

5. Split Shed.—Fig. 3 illustrates the positions assumed by the warp ends when forming a **split shed.** In this case all the warp yarn assumes the position shown by the line *a* after each pick of the loom. Those ends that are required to be up

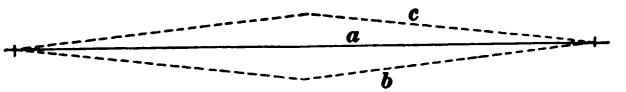

FIG. 3

on the next pick are raised from the center *a* to the top line *c*, while those ends that are required to be down on the same pick are lowered from the center line *a* to the bottom line *b*. Consequently, with this form of shedding, any warp ends that are in the top shed on one pick and that it is desired to lower

Digitized by Google

to the bottom shed on the next pick are dropped to the center *a* and then continue in their movement to the bottom line *b*, while those ends that are in the bottom shed on one pick and are to be moved to the top shed on the next pick are raised to the center *a* and continue their movement to the top line *c*. Any ends that are in the top shed on one pick and are to be in the top shed on the next pick are lowered to the center *a* and then raised to the top line *c*. Any ends that are in the bottom shed on one pick and that are to be in the bottom shed on the next pick are raised to the center line *a* and then lowered to the bottom line *b*. This form of shedding is produced in about the same time as an open shed, since the yarn can be raised from the bottom to the center line and returned to the bottom again in the same time that it takes an end to drop from the top line to the bottom line, the same being true of any of the ends in the top line that are to be dropped to the center and then again raised to the top.

6. Compound Shed.—Fig. 4 illustrates the positions assumed by the warp ends in forming a **compound shed.** In this form of shed, any ends that are to remain in the bottom shed for more than one pick remain stationary at the

FIG. 4

bottom line *a*; but any ends that are in the top shed *b* on one pick and are to be a part of the same shed on the next pick are lowered to the line *c* and then raised to the line *b*; while those ends that are in the top shed on one pick and are required to form a part of the bottom shed on the next pick continue their movement to the bottom line *a*. Those ends that are a part of the bottom shed on one pick and are to be a part of the top shed on the next pick are raised from the bottom line *a* to the top line *b*. In this form of shedding certain harnesses tend to balance others, since during the time that the ends in the top shed are dropping, those ends

Digitized by Google

Digitized by Google

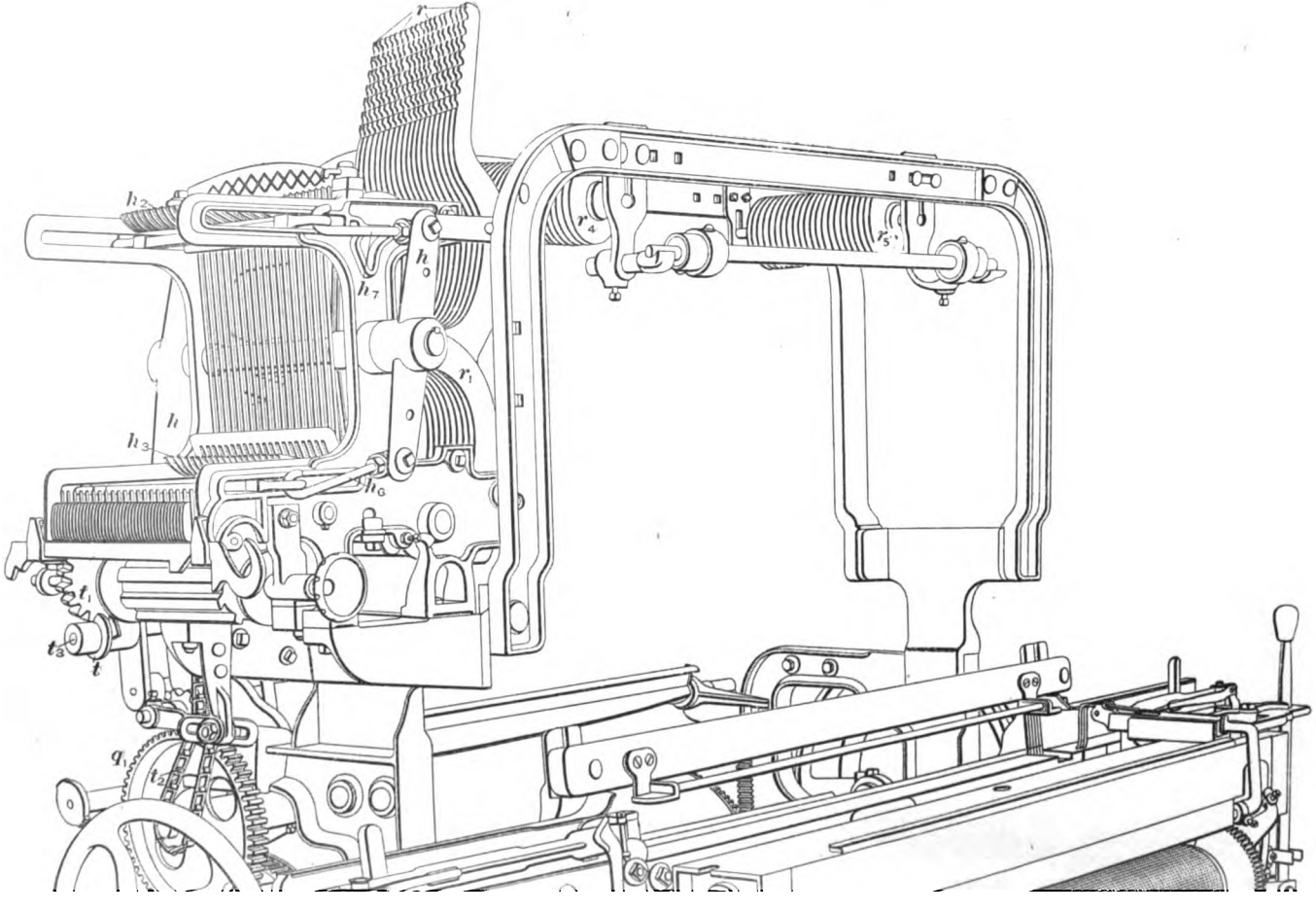

Digitized by Google

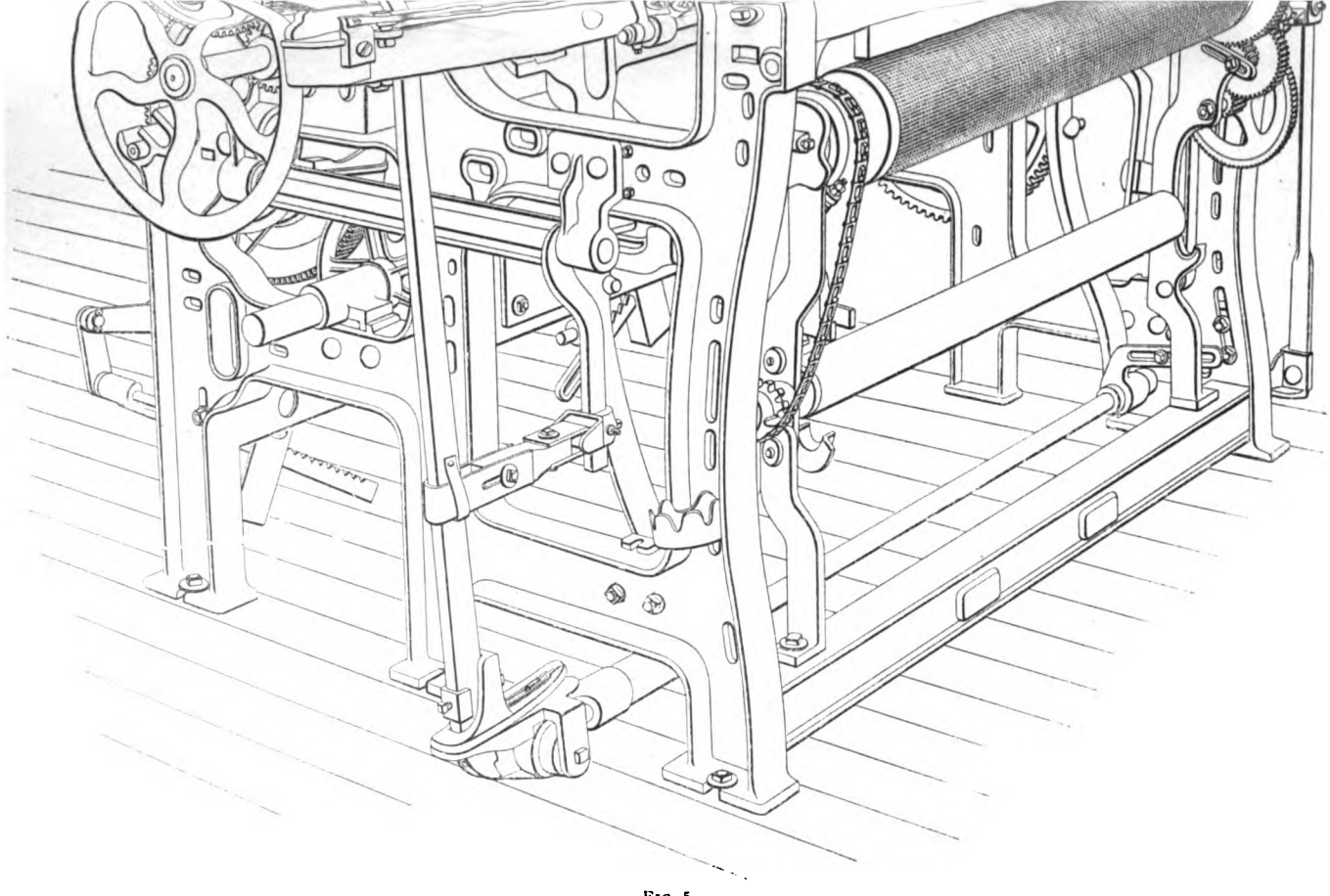

FIG. 5

§ 60 15430

Digitized by Google

Digitized by Google

in the bottom shed that are to be up on the next pick are being raised.

7. It should be understood that the different formations of sheds described are not all employed to an equally large extent, since some are found only on certain types of looms. Most of the dobbies as made today form an open shed, and unless otherwise mentioned, all references to shedding will be understood to refer to this type.

SINGLE-CYLINDER DOBBY

CONSTRUCTION

8. In 1867, Messrs. Hattersley & Smith, of England, patented a dobby that was far superior to anything that had been produced previously. Its extensive use, however, soon brought to light certain defects that were later improved. Yet the dobby as manufactured today is, in its fundamental principles, simply a modification of the original invention, strengthened and improved in order to meet the increased demands placed on it.

Fig. 5 is an illustration of a loom with a dobby attached, a front view of the dobby being shown in this instance. Fig. 6 is a rear view of the dobby alone. Reference should also be made to Fig. 7, which shows a section through the same dobby. As the same letters are used for the same parts in Figs. 5, 6, and 7, it will be well to examine these parts carefully in all the illustrations, so that a better knowledge of the construction of the machine may be obtained. It will be noticed from Fig. 5 that the loom itself is very similar to the ordinary plain loom, with the dobby attachment, the object of which is to regulate the rise and fall of the harnesses placed at one side.

One of the harnesses s operated by the dobby is shown in Fig. 7. To the bottom of the harness are attached harness straps s_1, to which are connected springs s_2, which are

Digitized by Google

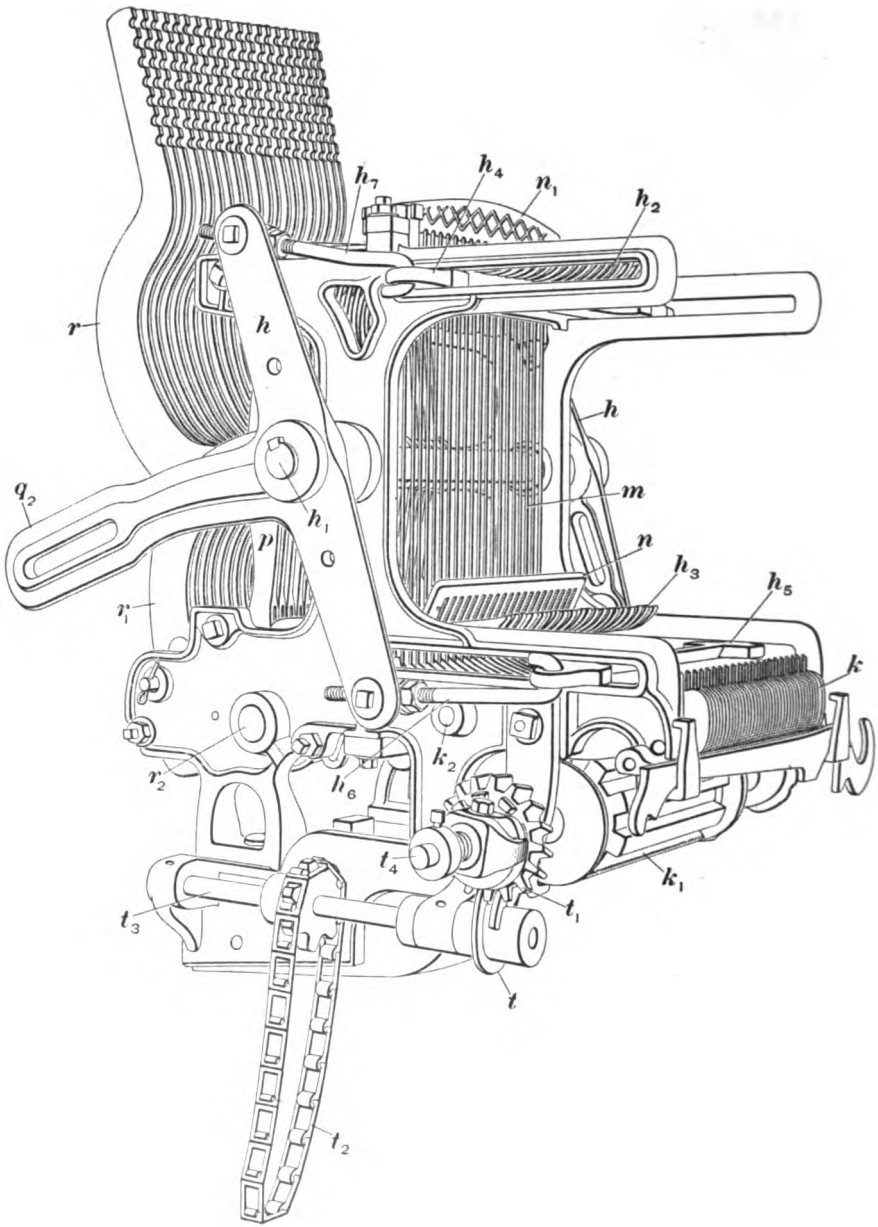

FIG. 6

Digitized by Google

connected to castings s_3 screwed to the floor. Connected to the top of the harness are harness straps s_4 that pass over the sheaves r_4, r_5 and are attached to the wire s_5, which in turn is connected to the harness lever r. Although Fig. 7 shows but 1 harness and 1 harness lever, it should be understood that dobbies are constructed with different numbers of levers up to 25 and that the number of harnesses possible to be operated by a dobby depends on the number of harness levers that it contains. The dobby shown in Figs. 5 and 6 contains 20 levers, and it is therefore possible to operate 20 harnesses in a loom having this dobby attached. It should also be noted in this connection that it is possible to operate any other number of harnesses under 20 with the same dobby, since it is not necessary to use all of the levers of the dobby.

Suppose, for illustration, that instead of 1 harness and 1 lever, as shown in Fig. 7, there are 12 harnesses operated by 12 independent levers. Then if some of these harnesses are raised and the others lowered, a shed will be formed by the warp yarn drawn through the harnesses; and if the shuttle is thrown across the lay through this shed and inserts a pick of filling, these two series of yarn—warp and filling—will interlace with each other and form cloth. Continuing further, if it is possible to have any of these 12 harnesses up or down on any pick, it will be readily seen that the sheds may be formed in a variety of different ways.

Referring again to Fig. 7, the lower end of the harness lever r fits over a rod r_3 that is supported by the two side pieces of the dobby. This rod is also shown in Fig. 6. At the point r_3 a boss on the lever projects into the jack p and is held firmly in position by lever guides r_1, Figs. 5 and 6, that press against the two outer levers. These guides may be tightened or loosened by means of setnuts.

When the jack p is in the position shown in Fig. 7, its upper arm rests against the top girt p_2, while its lower arm rests against the bottom girt p_1. If any force acts on the top arm of the jack to draw it to the left of the position it occupies in Fig. 7, then its lower arm resting against the

Digitized by Google

bottom girt p_1 will cause the jack to act as a lever and draw with it the harness lever r, thus raising the harness. The same action will take place if the lower arm of the jack is drawn to the left while its upper arm is resting against the top girt p_2.

A very important action of the jack that should be noted in this connection is as follows: Suppose that the upper arm has moved to the left and raised the harness, but that as this upper arm is returning to its position against the top girt the lower arm is being moved to the left; then, since the movement of the upper arm in one direction is equal to the movement of the lower arm in the other, the harness lever and the harness that it controls will remain at its upper position. By this means the harness may be held up for any length of time that may be desired. This is termed a *double-lift* arrangement; a dobby capable of giving such a lift to the harnesses is known as a *double-lift dobby* and, as will be readily seen, produces an open shed.

9. Connected to the top of the jack is the top hook h_3, while a bottom hook h_2 is connected to the bottom of the jack. These hooks are so shaped at their outer ends that the top hook is capable of engaging with the top knife h_4, while the bottom hook is capable of engaging with the bottom knife h_5, provided that the hooks assume the necessary position. The knives h_4, h_5 slide back and forth in slots cast in the sides of the dobby, and are operated, as seen in Figs. 5 and 6, by two rockers h, to which they are connected by top and bottom knife hooks h_7, h_6, respectively. These rockers are held in position by a rod h_1, to which they are keyed and which rests in the two sides of the dobby. In speaking of the knives of the dobby, they are said to be in or out; to be on their inward throw or on their outward throw. For example, if the top knife is moving toward the loom it is said to be on its inward throw, and when it has moved to the limit of its throw in this direction it is said to be in; on the other hand, when it is moving away from the loom it is said to be on its outward throw, and when it has reached the limit

Digitized by Google

Digitized by Google

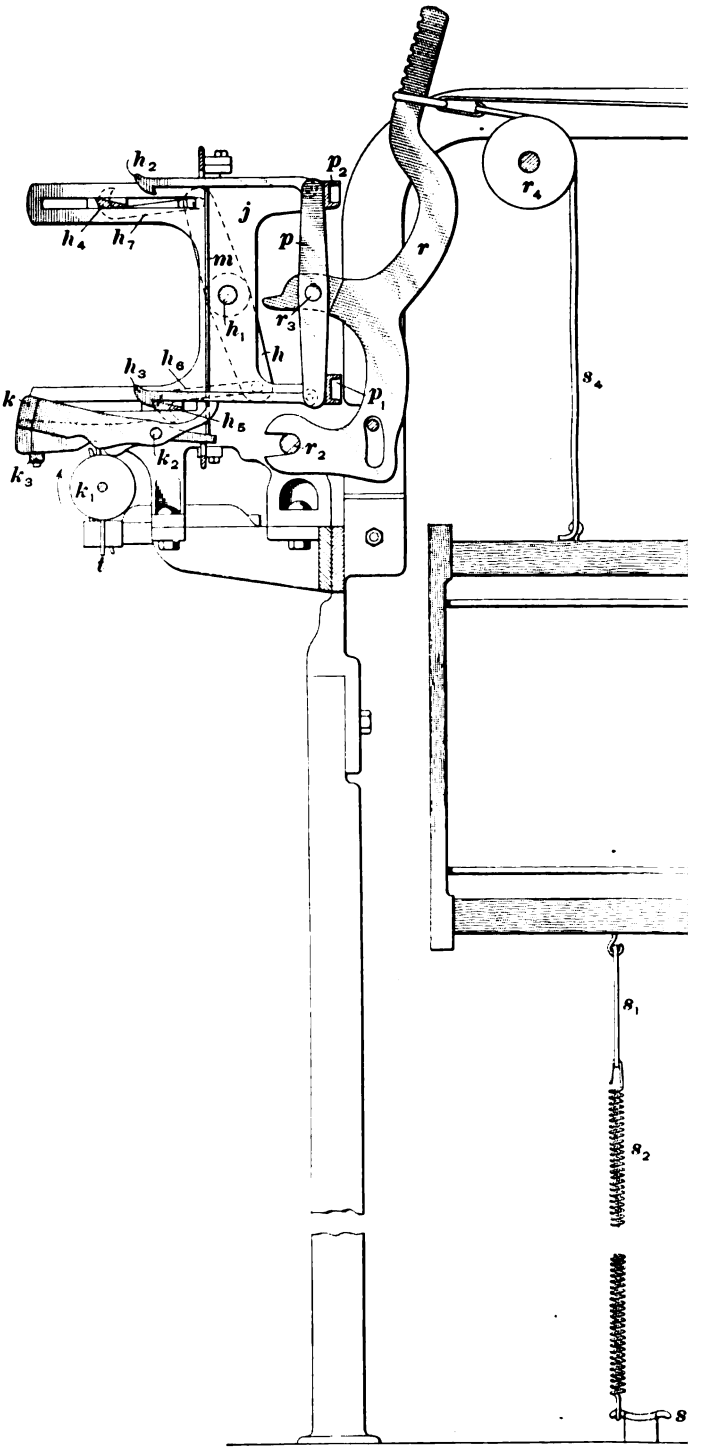

Digitized by Google

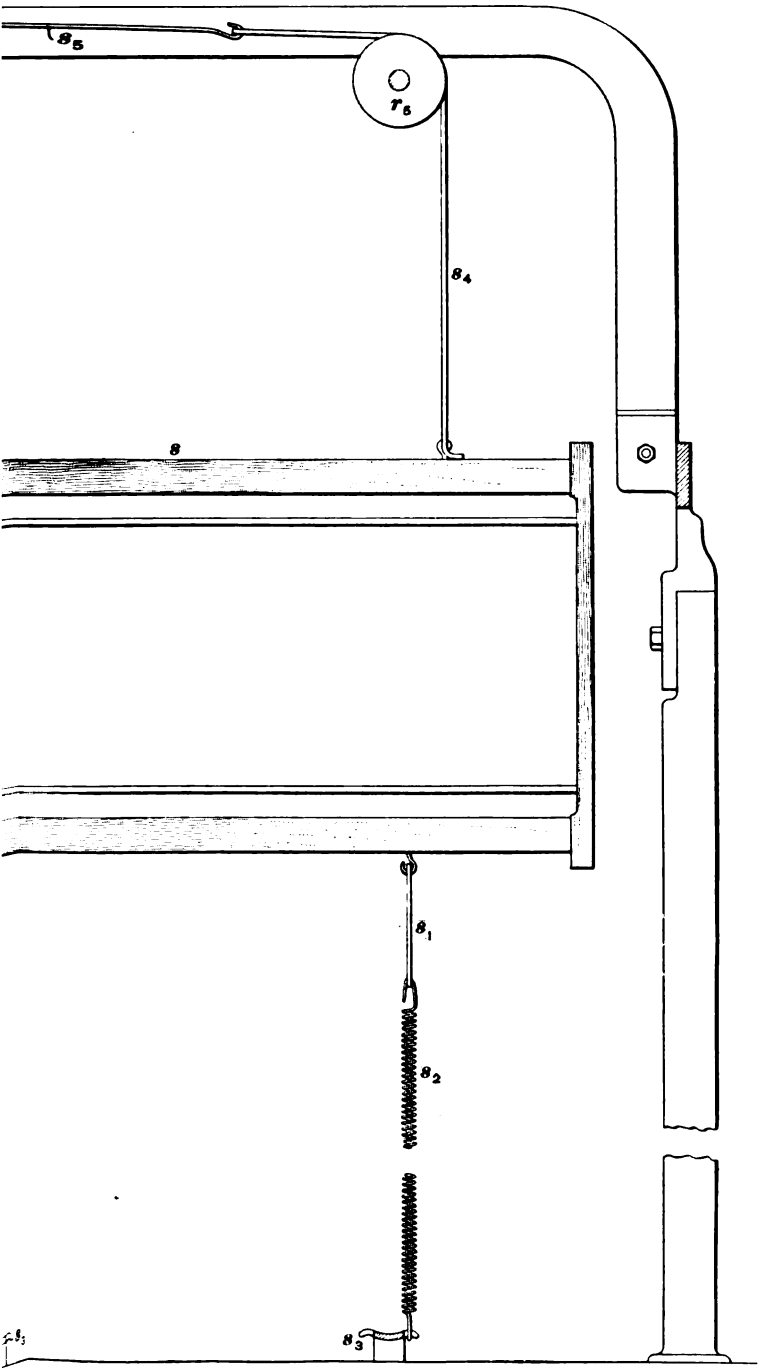

FIG. 7

§ 60 15430

Digitized by Google

Digitized by Google

of its movement in this direction it is said to be out. The same remarks apply to the bottom knife.

The outer ends of the hooks h_1, h_2 are controlled by the dobby fingers k; these are held in position at their inner ends by a rod k_2 that passes through them, while the outer ends of the fingers, which are made slightly thinner, pass between wires and rest on a bar k_3 of the dobby frame. A better idea of the shape of the fingers may be obtained by referring to Fig. 8, which gives a view of the fingers themselves. With this style of dobby, which is known as *double-index*, there are two fingers for each jack of the dobby; one finger has a point a_2 on which the bottom hook rests, as shown in Fig. 7, while the other finger has a point a_3 on which

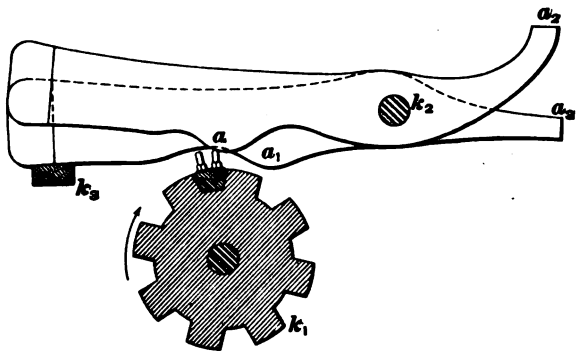

FIG. 8

a wire m, Fig. 7, rests; the top hook h_2 bears directly on the upper end of this wire. Thus one finger controls one hook independently of the other. That part of each finger from the point where the rod k_2 passes through it to its outer end is sufficiently heavy to overbalance the inner part together with the weight of the hook resting on it. Consequently, provided that the outer ends of the fingers are not lifted, they will rest on the bar k_3, Figs. 7 and 8; when the fingers are in this position, the points a_2, a_3, Fig. 8, will be as high as it is possible for them to rise. The connections to the hooks are such that when the fingers are in this position the outer ends of the hooks h_1, h_2, Fig. 7, will not engage

Digitized by Google

with the knives h_4, h_5. Placed directly beneath the fingers is the grooved cylinder k_1, Fig. 6. This cylinder, known as the harness-chain cylinder, carries the harness chain, which consists of wooden bars linked together at their ends. One bar of a chain that would be used with double-index fingers is

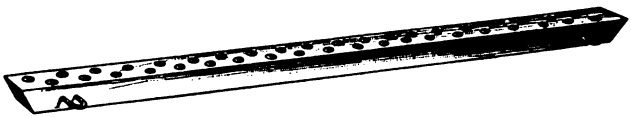

FIG. 9

shown in Fig. 9. These bars are so shaped that they fit readily into the grooves cut in the chain cylinder and are flush with its surface when under the fingers. Each bar contains two rows of holes, each row containing as many holes as there are levers in the dobby. The holes in each row are so spaced that when the bar is placed on the cylinder and brought under the fingers, each hole in the first row will be directly beneath a finger of the set operating the bottom hooks, while each hole in the second row will be directly beneath a finger of the set operating the top hooks. If it is desired to raise the outer end of any finger in the dobby, a peg, which may be made either of wood or steel, is inserted in the hole corresponding to that finger.

FIG. 10

Fig. 10 shows a peg made of steel; its shoulder *a* comes flush with the upper surface of the bar when the peg is in

FIG. 11

place. These pegs may be readily inserted or taken out by means of a peg puller, such as is shown in Fig. 11, which contains a square hole that fits over the middle part of the peg. In a great many cases peg pullers are not used, the pegs being inserted with a hammer and taken out with pliers.

Digitized by Google

METHOD OF DRIVING

10. Dobby Crank-Shaft.—Referring again to Figs. 5 and 6, the manner in which the different parts of the dobby receive motion will be explained. On the end of the crank-shaft of the loom, Fig. 5, is a gear q of 30 teeth that drives a gear q_1 of 60 teeth; the gear q_1 is on a short shaft that is known as the crank-shaft of the dobby. Connected to the inner end of the dobby crank-shaft by means of a crank-arm and working on a swivel is a connecting-rod, which at its other end is connected to the rocker-arm q_2 of the rocker h, Fig. 6. The rocker-arm and rocker together are sometimes spoken of as the T lever. As the connecting-rod is moved up and down by the crank-arm on the dobby crank-shaft, it will impart an up-and-down movement to the rocker-arm q_2, thus giving a rocking motion to the rocker h. Since the gear on the dobby crank-shaft contains twice as many teeth as the gear on the loom crank-shaft, these two parts are geared 2 to 1 and will bear the same relation to each other as do the cam- and crank-shaft of a plain loom. Consequently, the dobby crank-shaft will make one complete revolution during every 2 picks of the loom, which will cause the top part of the rocker h to be moving out on one pick and in on the next. This point should be carefully noted when endeavoring to understand the action of the dobby as a whole.

In some cases the rocker-arm of the dobby is connected directly with and driven by the bottom shaft of the loom, thus receiving the same speed with relation to the crank-shaft as one connected in the manner described above. Dobby crank-shafts are spoken of as being on their top, bottom, front, or back centers.

11. Cylinder Drive.—Referring to Fig. 5, there will be noticed on the outer end of the dobby crank-shaft a sprocket gear that, by means of a chain t_3, drives a short side shaft t_2, Figs. 5 and 6. The shaft t_2 carries a worm t that drives a worm-gear t_1 on the cylinder shaft t_4, Fig. 6, carrying the

Digitized by Google

harness-chain cylinder k_1. The manner in which this worm t drives the cylinder k_1 is shown more clearly in Fig. 12.

The worm-gear t_1, which has a series of projections on one of its sides, works loosely on the cylinder shaft t_4. Set-screwed to the cylinder shaft is a clutch arrangement consisting of a plate t_5 to which is hinged a lever t_6 that projects through a slot in the plate t_5 and engages with one of the projections on the worm-gear t_1. The lever is kept pressed against the worm-gear by means of the spring t_7, which is loose on the cylinder shaft, but is compressed between the lever

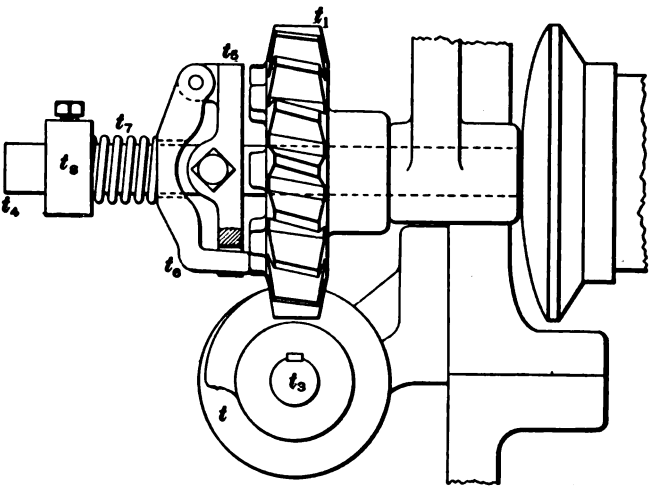

FIG. 12

and the collar t_8. In Fig. 12, the lever t_6 is shown in the position that it assumes when thrown out of connection with the projections on the worm-gear t_1, but it should be understood that when the cylinder is operating, the lever t_6 will be in position between two of the projections on t_1. So long as the cylinder is free to rotate, the worm-gear t_1 imparts motion to the cylinder shaft by means of the clutch, but in case any obstruction prevents the revolving of the cylinder, the lever t_6 is thrown out of connection with the projections of the worm-gear t_1; the spring t_7 allows this to be done readily.

The worm t is so shaped that in revolving it gives to the

Digitized by Google

cylinder an intermittent motion; this motion brings the first row of pegs in the pattern chain under one set of fingers of the dobby at the point *a*, Fig. 8. At this point the cylinder will pause, owing to a straight part of the worm *t* working in the worm-gear t_1. The worm *t* continuing to revolve will next turn the cylinder until the pegs in the second row of the bar come under the other set of fingers at the point a_1, Fig. 8. At this point the cylinder is again allowed to stop. The object of giving this pause to the cylinder is to allow the pegs in the chain to hold up the outer ends of the fingers for a sufficient length of time to allow the knives to engage with those hooks that are down.

OPERATION

12. In order that the operation of the dobby as a whole may be better understood, the action of the different parts that takes place during one or more picks of the loom will be explained with reference to Fig. 7. Suppose that the different parts assume the positions shown in this illustration and that a peg in the pattern chain comes under the finger operating the bottom hook h_3. This peg throwing up the outer end of the finger allows the inner end, on which the hook rests, to drop; this allows the outer end of the hook h_3 also to drop. As the dobby crankshaft revolves and, through the connecting-rod, operates the rocker *h*, the lower arm of the rocker *h* in being pushed out will carry with it the knife h_4, which will engage with the hook h_3 and thus take with it the lower end of the jack *p*. The upper end of the jack bearing against the girt p_3 will be fulcrumed at this point, so that as its lower end is brought out by the action of the knife it will raise the lever *r*, which is connected to the jack *p* at the point r_3. The lever *r* in being pulled outwards will, through the strap connections, raise the harness connected to that lever. If on the next pick it is desired that this harness be down, no peg will be inserted in the pattern chain to operate the finger that connects with the top hook h_3; consequently, the knife h_4, which

Digitized by Google

is moving out on this pick, will escape the hook h_1, and the bottom knife h_4 in returning will allow the pull of the springs attached to the bottom of the harness to pull the harness down to its lowest position. This will cause the warp ends drawn through this harness to form a part of the bottom shed. If, on the other hand, it is desired to have this harness remain up on the second pick, a peg is inserted in the pattern chain to raise the outer end of the finger operating the top hook. The outer end of the finger in being raised causes its inner end to drop, and this motion, being imparted to the top hook h_4 through the wire m, allows this hook to engage with the top knife and be carried out on this pick; this brings the upper arm of the jack p outwards and holds the harness at its upper position.

VARIATIONS OF CONSTRUCTION

13. It should be understood that all dobbies are not constructed according to the descriptions given, all of which apply to the dobby illustrated in Figs. 5 and 6. Dobbies as made today are of several varieties; such as *positive, non-positive; single-lift, double-lift; single-index, double-index.* The dobby that has been described is known as a non-positive, double-lift, double-index dobby.

14. Positive and Non-Positive.—Dobbies are said to be **positive** or **non-positive,** according to whether they do or do not positively control both the raising and lowering of the harnesses. It will be remembered that in the case of the dobby illustrated in Fig. 7, the dobby lever r positively raises the harness, while springs s_4 are introduced to lower the harness as the pull of the harness lever is taken away. Dobbies, however, are sometimes constructed in such a manner that the harness lever will not only lift the harness positively, but also lower it. As this type of dobby is not frequently met with, it will not be dealt with here.

15. Double-Lift and Single-Lift Dobbies.—Dobbies are said to be **double-lift** or **single-lift,** according to

Digitized by Google

whether or not more than one part of the dobby can operate the harness lever. By referring to Fig. 7, it will be seen that the harness lever may be raised by either the top or the bottom hook, these two hooks being attached to the same jack and this jack operating but 1 harness lever. Consequently, the dobby in this case is a double-lift machine. If, on the other hand, the jack is operated by only a single hook, the dobby is single-lift. In a single-lift dobby a harness cannot be held up for more than 1 pick, and if a harness is up on one pick and it is desired to have the same harness up on the next pick it must be lowered to the bottom and again raised to the top. On this account, double-lift machines can be speeded higher without producing any more strain on the warp yarn, since the yarn has no unnecessary movement. Single-lift machines must, of necessity, form a close shed, while a double-lift machine ordinarily forms an open shed. However, by the application of special mechanism, or by making other changes, the ordinary double-lift dobby can be caused to make a close shed. It has, therefore, become customary to consider as a single-lift machine, any dobby that makes a close shed, and as a double-lift dobby any machine that forms an open shed, irrespective of the actual construction of the machine.

16. Double-Index and Single-Index Dobbies.—Dobbies are said to be **double-index** or **single-index** according to whether or not there is a separate index finger for each hook, both top and bottom. It will be remembered that with the dobby illustrated in Fig. 7 there is an index finger for each hook of the machine, making the dobby double-index. If one finger controlled both the top and bottom hooks that are attached to the same jack, the dobby would be known as single-index. The finger used in such a dobby is shown in Fig. 13. It contains a point *a*, on which rests the bottom hook, while a wire *m* that sets in the slot *a*, extends to, and supports, the top hook. Consequently, if the outer end of this finger is raised, thus lowering its inner end, both the top and bottom hooks will be in position to

Digitized by Google

engage with the knives. A bar of the pattern chain used on such a dobby is shown in Fig. 14; it contains but a single row of holes. With this arrangement, the driving mechanism of the chain cylinder is so arranged that it forces a new bar

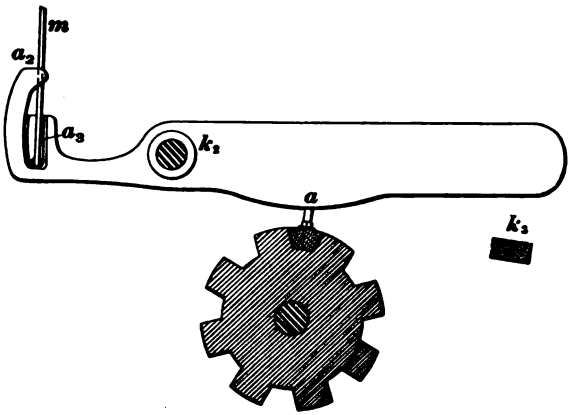

FIG. 13

of the pattern chain under the fingers for each pick of the loom. The chief advantage that the double-index has over the single-index is that with the former one bar of the pattern chain serves for 2 picks of the loom, while with the latter, one bar serves for only 1 pick.

17. Pawl-and-Ratchet Drive.—A method of driving the harness-chain cylinder that differs from the one described is illustrated in Fig. 15. Connected to the lower arm of the rocker h is a casting t_3 that carries the pawl t, which works

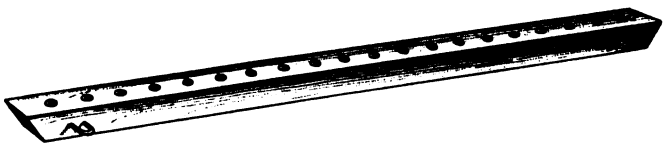

FIG. 14

in the teeth of the ratchet gear t_1 on the cylinder shaft t_4. An escapement feature is also provided by connecting the pawl t to the casting t_3 through the intervention of a spring t_5. In case any obstruction prevents the cylinder from revolving

Digitized by Google

freely, only the strength of the spring must be overcome when the pawl engages with the ratchet gear as the lower end of the rocker moves in. With this drive, it is necessary to adopt some method of holding the cylinder firmly in position after it has been turned by the pawl. This is accomplished by means of the roller t_5, which through the action of the spring t_7 is held firmly against a disk t_6 fastened

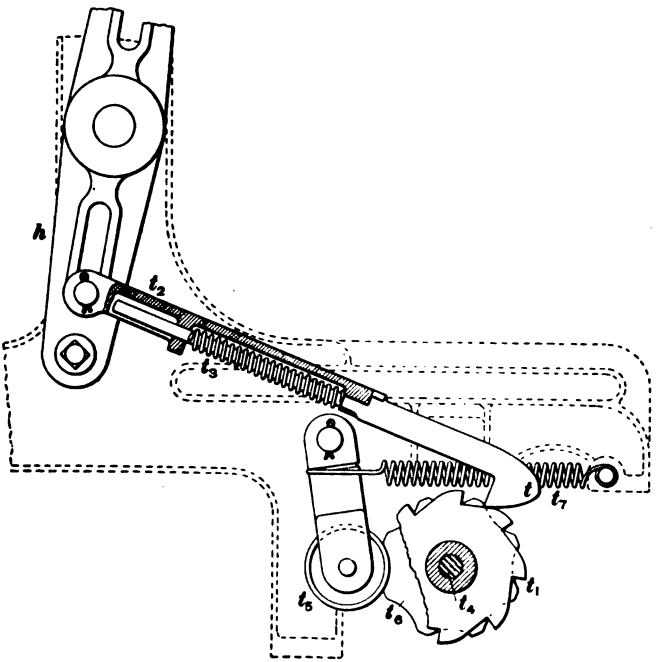

FIG. 15

to the cylinder shaft. This disk has cut-outs in its edge, which, being engaged by the roller, cause the chain cylinder to be securely held in the correct position while the pegs in the bar of the chain raise the fingers of the dobby. It should be noted that since the lower arm of the rocker moves in only once during every 2 picks, the pawl will turn the chain cylinder only once in 2 picks; consequently, this drive can be adopted only on a double-index dobby, where one bar of

Digitized by Google

the pattern chain serves for 2 picks. The index fingers on a dobby with this drive are so shaped that the fingers that are operated by the pegs in the first row will be resting on the pegs in this row when the bar is brought under the fingers by the action of the pawl, and at the same time the fingers operated by the second row of pegs in the same bar will be resting on their pegs.

18. Right-Hand and Left-Hand Dobbies.—It should be noted that the dobby shown in Figs. 5 and 6 is constructed to be placed on a right-hand loom, the dobby being placed at the opposite end from the driving end. Dobbies are spoken of as being **right-hand** or **left-hand,** although there is considerable difference of opinion as to what constitutes a right-hand or a left-hand dobby. Some claim that the mechanism takes its name from the loom on which it is placed, while others claim that a dobby is right-hand or left-hand according to whether it is placed at the right-hand or left-hand side of the loom. As the dobby is placed at the side of the loom opposite that containing the driving pulley, these two opinions are in direct opposition to each other. In this Course, a dobby will be considered right-hand or left-hand according to the position it occupies when attached to the loom.

DOUBLE-CYLINDER DOBBY

CONSTRUCTION

19. If it is desired to weave a pattern that contains a large number of picks in the repeat, a large number of bars must be built for the pattern chain, since even on the double-index dobby one bar represents only 2 picks, and when patterns of several hundred picks are woven this becomes a matter of considerable importance, as a long chain always requires more time in being built. Additional strain is also placed on the dobby by the use of a long chain, since the chain must be supported to a certain extent by the cylinder.

Digitized by Google

When the pattern consists of but one weave it is difficult to overcome this defect, but it frequently happens that a pattern may consist of two weaves, one of which is repeated a large number of times before the next weave is brought into use. An illustration of this occurs in weaving handkerchiefs, when the center of the handkerchief consists only of a plain weave repeated a sufficient number of times to produce the desired length, another weave is introduced for the border (which may also be repeated) to complete the weave.

To overcome this difficulty, a dobby known as the **double-**

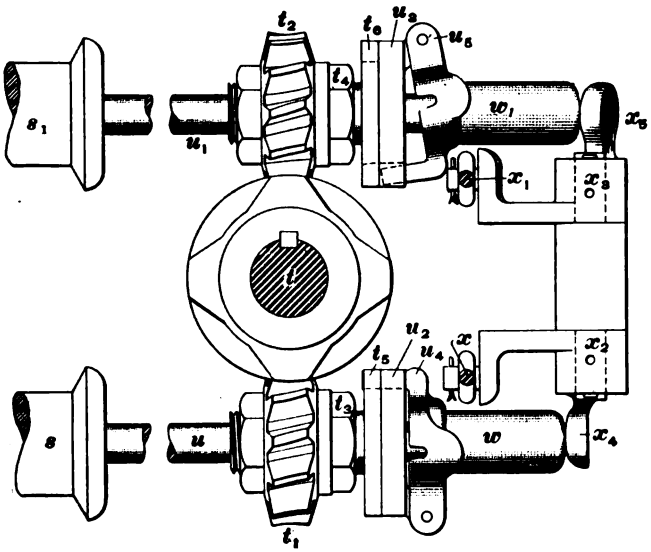

FIG. 16

cylinder dobby is at present largely used, which (as its name implies) contains two cylinders; the pattern chain for one weave is placed on one of the cylinders, while the pattern chain for the other weave is placed on the other cylinder. Since it is possible to send either cylinder around as many times as there are repeats of the weave before changing on to the other cylinder, it is necessary to build only one repeat of each weave, provided that the number of bars in one repeat is sufficient to encircle the chain cylinder. If

Digitized by Google

the number of bars required for one repeat of the weave is less than the number of bars required to encircle the chain cylinder, the weave may be repeated as many times as necessary and the chain cylinder sent around a correspondingly less number of times.

Fig. 16 shows a plan view of the driving mechanism for

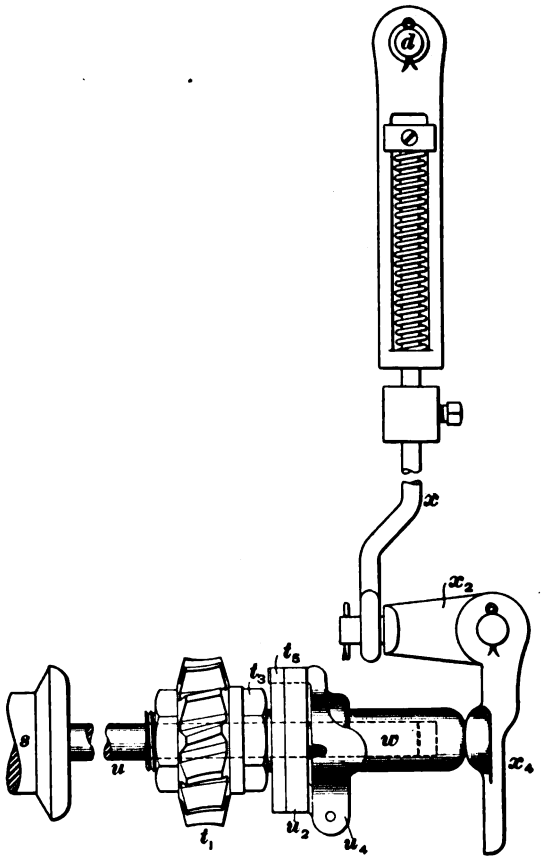

FIG. 17

the cylinders of a two-cylinder dobby, while Fig. 17 shows the driving mechanism of the cylinders as viewed from the end of the loom; one cylinder only is shown in Fig. 17, since the two cylinders are situated one directly behind the other

Digitized by Google

as viewed from this position. Reference is made to both figures in the following description, the same letters applying to the same parts in both cases.

Directly beneath the dobby fingers are placed the two cylinders s, s_1, which receive their motion by means of a worm placed between the cylinders and fixed at the end of an upright shaft t that derives its motion from the crank-shaft of the loom. Working loosely on the cylinder shafts are

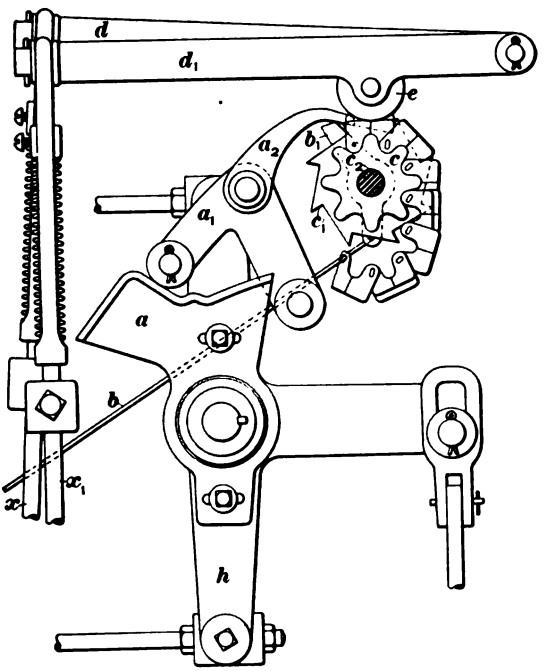

FIG. 18

collars that carry the worm-gears t_1, t_2 and the plates t_3, t_4. The worm-gears are at all times in gear with the worm t; consequently, these gears, together with the plates t_3, t_4, are revolving as long as the loom is running. Fastened to the cylinder shafts u, u, are the plates u_2, u_3, to which are attached the levers u_4, u_5. Between the plates u_2, u_3 and the levers u_4, u_5 are springs that tend constantly to force the

Digitized by Google

levers away from their respective plates. Each plate contains a cut-out into which the lever may slide; w, w_1 are two sleeves set loosely on the cylinder shafts and are in contact with the levers u_4, u_5. The two rods x, x_1 are worked by levers that are raised and lowered by means of a chain containing *risers* and *sinkers;* x_4, x_5 are projections of two levers worked by means of the rods x, x_1.

20. Repeat Motion.—The rods x, x_1 are worked by what is known as the *repeater chain;* a view of it is given in Fig. 18, x, x_1 being the rods shown in Figs. 16 and 17. These rods are attached at their upper ends to the levers d, d_1, on each of which is placed a roller e that rests on a chain passed around the cylinder c. This chain is made up of links, each of which contains a high and low part; consequently, if the link is placed on the chain in such a manner that its high part will come under the roller e carried by the lever d, this lever will be raised, while the low part of the same link coming under the lever d_1 will allow that lever to drop. If the link is turned end for end so that the high part comes under d_1 while the low part comes under d, the opposite effect will result.

The repeat-chain cylinder c has on its shaft c_5 a ratchet gear c_1 that is operated by a pawl a_5 driven by a cam a fastened to the dobby rocker h. This part of the mechanism operates in such a manner that the pawl a_5 is thrown forwards each time that the upper part of the dobby rocker is thrown in; or, in other words, each time that the bottom hooks are drawn out. A dog b_1 that works loosely on the shaft c_5 is set under the pawl and prevents it from engaging with the teeth of the ratchet except when the dog is lowered by means of the wire b, which is connected at one end to an index finger of the dobby. When a peg is placed in the pattern chain and lifts this finger, the rod b will be pushed upwards, lowering the dog b_1 and allowing the pawl a_5 to drop and engage with the ratchet teeth.

Digitized by Google

OPERATION

21. The **operation** of the different mechanisms illustrated in Figs. 16, 17, and 18 is as follows: Suppose that the cylinder s_1 has been in operation and that the cylinder s has been stationary, but that it is now desired to operate the harness chain that is on the cylinder s. Then the cylinder s_1 must be stopped, while the cylinder s must be set in motion. To accomplish this a link that will raise the lever d and allow the lever d_1 to drop is brought under the levers d, d_1. As the lever d_1 drops, the rod x_1 also drops, releasing the pressure of the lever x_2 on w_1 and allowing a spring that is constantly exerting a pressure on u_2 to push out this lever until it

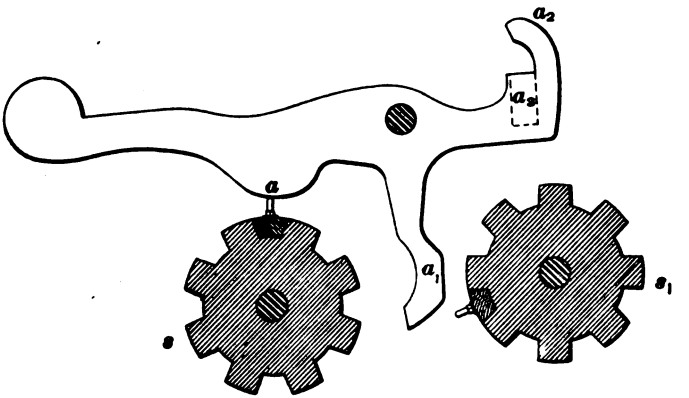

FIG. 19

occupies the position shown in Fig. 16. This action breaks the connection between the plates t_2 and u_3, and consequently stops the cylinder s_1, since the worm-gear t_3 and the plate t_2 are on a collar that works loosely on the cylinder shaft. At the same time that the lever d_1 drops, the lever d is raised; this, raising the rod x, throws the lever x_4, Fig. 17, against the collar w, thus serving to push the lever u_4 through the cut-out in the plate u_3, into one of the cut-outs in the plate t_5. This action of the different parts will set the cylinder s in operation, since the two plates u_3, t_2 are securely locked together, and the plate t_3 is receiving motion from the

Digitized by Google

worm-gear t_1 while the plate u_2 is fastened to the cylinder shaft. At the time that the lever u_4 is thrown in, a cut-out in the plate t_2 should be directly opposite the cut-out in the plate u_2. This relative position of the two plates may be secured by loosening the check-nut t_3, when the plate t_2 may be turned to any desired position. After the plate has been placed in its correct position, the check-nut should be securely fastened.

Fig. 19 shows the kind of finger used on such a dobby. It is a single-index finger, since it controls both the top and bottom hooks—a_2 working the bottom hook, while a wire resting in the slot a_3 works the top hook. The pegs in the chain passing around the cylinder s, Fig. 16, come under the finger at the point a, Fig. 19, while the pegs in the chain that works on the cylinder s_1 come in contact with the finger at the point a_1; thus, if a peg acts on the finger either at the point a or a_1, its outer end will be raised, while its inner end, and consequently the hooks in connection with it, will be lowered.

22. Suppose that it is desired to weave a pattern containing 200 picks of plain weave and 50 picks of a fancy weave, one repeat of which occupies 10 picks. The number of bars built for each weave must be divisible into the total number of picks for that weave and must also be an even number. Thus, for the weave of 200 picks 10, 20, 40, etc. bars could be built, while for the weave of 50 picks, 10 bars could be used. It will be assumed that 20 bars of the plain weave and 10 bars of the fancy weave are to be built. In addition to the pegs for the weave, there is also placed in the last bar of each chain a peg to operate the index finger connected to the wire rod b, Fig. 18, so that each time the harness chain makes one complete revolution the rod b will be pushed up, thus allowing the pawl a_2 to engage with the teeth of the ratchet and turn the ratchet 1 tooth.

It will be assumed that the 20 bars of plain weave are placed on the cylinder s, and the 10 bars of fancy on s_1. As it is desired to obtain 200 picks of plain and 50 picks of fancy, the chain containing the plain weave will have

Digitized by Google

to be sent around ten times, and the 10 bars of fancy will have to be sent around five times. Since the raising of the rod x throws the cylinder s into operation, while the lifting of the rod x_1 throws the cylinder s_1 into operation, the repeat chain to be placed on the cylinder c will contain ten risers that will raise the lever d, and five risers that will raise the lever d_1, which gives a total of fifteen links in the repeat chain. It should be carefully noted in this connection that a link of the chain for the repeat cylinder contains a riser on one end and a sinker on the other; consequently, when a link is placed on a chain in such a manner that it will raise one lever, it must of necessity lower the other. In the case of this illustration it will be seen that only 30 bars of pattern chain are built, whereas on a single-cylinder, single-index dobby it would have required 250 bars to weave the same pattern; the only additional work required in the case of the double-cylinder dobby is the building of the chain for the repeat cylinder.

BUILDING HARNESS CHAINS FOR DOBBIES

23. The order of lifting and lowering the harnesses is marked on design paper and is known as the *chain draft*, as it is from this draft that the harness chain is made. Fig. 20 shows a harness chain draft for a weave. Each row of squares running vertically represents the order in which 1 harness is raised and lowered, while each row of squares running horizontally shows what harnesses are up on each pick; the bottom horizontal row of squares generally indicates the first pick. The filled-in squares show that a harness is up, while the blank squares show that a harness is down. Thus, by referring to Fig. 20, it will be seen that on the first pick the first, second, third, fourth, fifth, seventh, ninth, and eleventh harnesses are up;

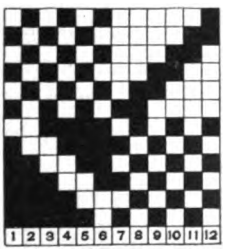

FIG. 20

Digitized by Google

consequently, the warp ends that are drawn through these harnesses will form the top shed on this pick. It also shows that on this pick the sixth, eighth, tenth, and twelfth harnesses are down; consequently, the ends drawn through these harnesses will form the bottom shed on this pick.

That the method of pegging a pattern chain from a harness draft may be more fully understood, the draft in Fig. 20 will be placed on a harness chain consisting of bars, each of which contains a double row of holes in which pegs may be inserted. A view of such a bar, which is used on a double-index dobby, is shown in Fig. 14 and, as stated, each row of holes represents 1 pick, while the manner of pegging these holes determines the order of lifting the harnesses. If it is desired to raise a lever and, consequently, a harness, a peg is inserted in the hole corresponding to that harness; on the other hand, if it is required that that harness shall be down, the hole is left blank.

24. When building a harness chain, the first thing to determine is the first harness and the first pick, as shown on the draft. It next becomes necessary to peg the pattern chain in such a manner that the bar containing the first pick will be placed on the cylinder first, while the pegs that control the first harness must come at the front of the loom so that the pegs will operate the first lever. When the first harness and the first pick are not designated on the draft, it is safe to assume that the lower left-hand corner will give the position of these two. This is the case with Fig. 20, and consequently the bottom pick, as shown in the harness draft, will be placed on the bar that is first put on the cylinder.

When the pick that is to be pegged first has been determined, it is necessary to determine on which end of the bar the pegs operating the first harness shall be placed. This is governed by the end of the loom on which the dobby is placed, as a chain built for a dobby placed at the right of a loom cannot be put on a dobby placed at the left of the loom. It will be assumed that in this instance the chain is to be

Digitized by Google

Digitized by Google

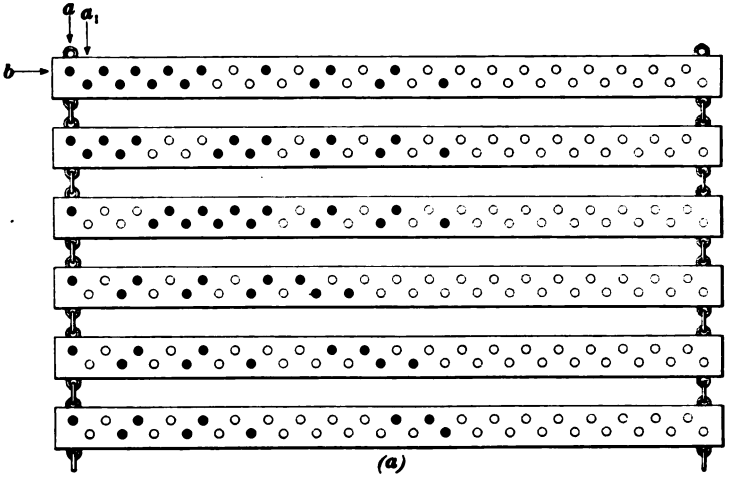

(a)

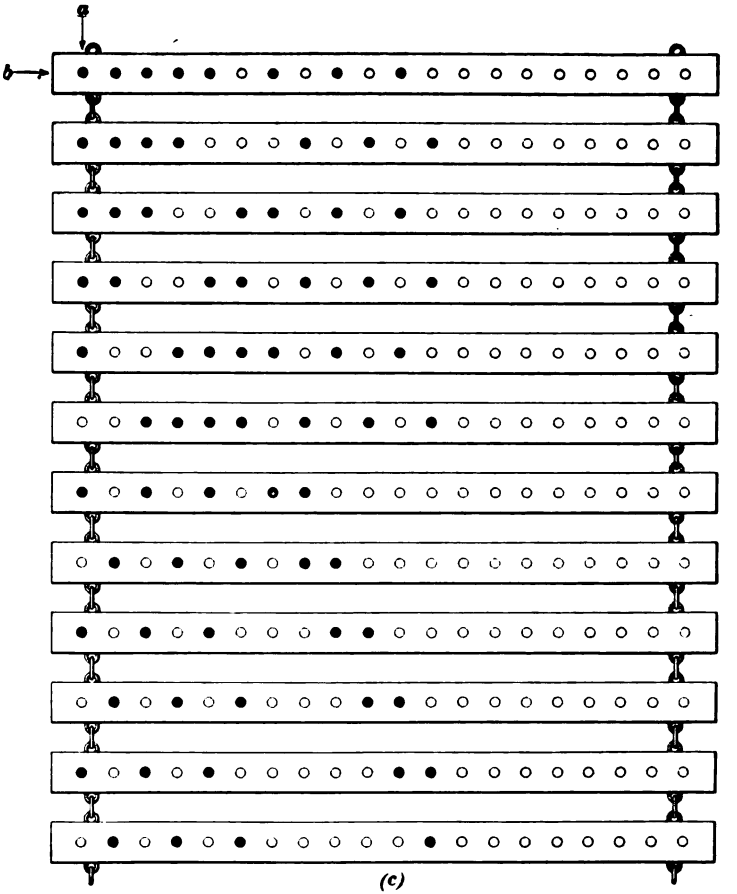

(c)

Fi

Digitized by Google

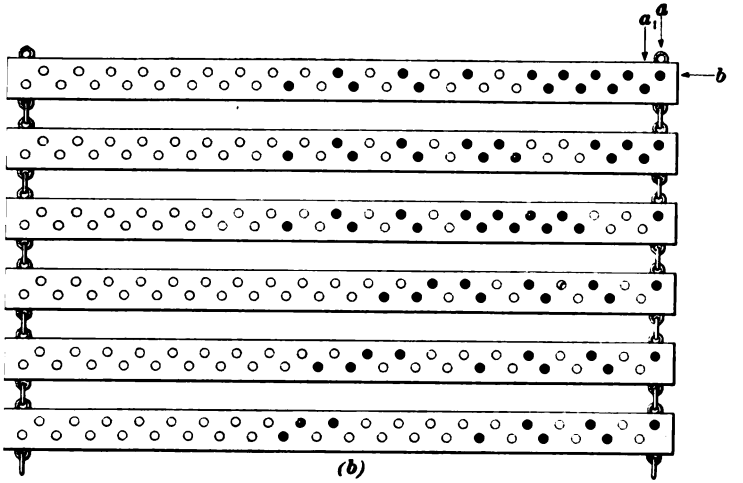

(b)

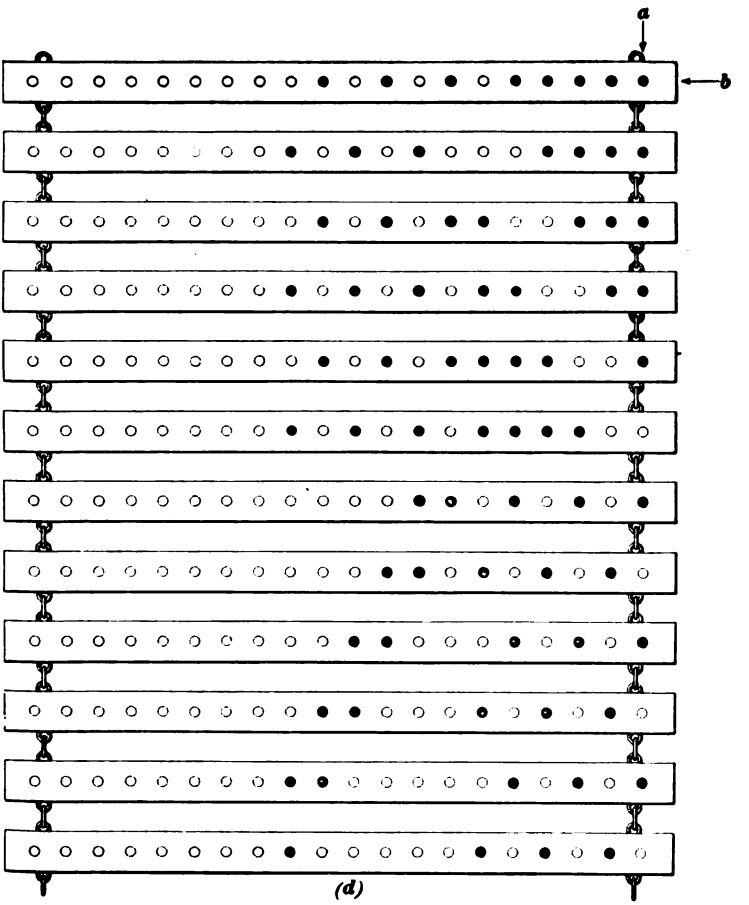

(d)

§ 60 15130

Digitized by Google

Digitized by Google

placed on a dobby on the right of the loom; then the lever that actuates the first harness will be on a person's left when placing the chain on the cylinder and, consequently, the holes on the left-hand end of the chain will govern the first lever. Thus, it is necessary to place the bottom pick of the harness draft on the first row of holes in the chain and also to have the holes on the left of the chain operate the first harness.

Fig. 21 (*a*) represents a harness chain built in this manner; *b* shows the first pick of the weave, while a, a_1 denote the rows that will operate the first harness. It will be noticed that these bars are made for a 20-harness dobby, while the weave occupies only 12 harnesses. In such cases the first twelve holes are used and the rest remain blank. In this figure the filled-in circles show where pegs have been inserted.

If the dobby were placed at the left of the loom, as in Fig. 5, the first row of holes on the right-hand end of the chain would be used for the first harness. A chain pegged for a double-index dobby placed on the left of the loom is shown in Fig. 21 (*b*), the same draft being used as in Fig. 21 (*a*). In Fig. 21 (*c*) is shown the same weave placed on a chain that would be used on a single-index dobby placed on the right of the loom. A chain pegged for a single-index dobby placed on the left of the loom is shown in Fig. 21 (*d*).

FIXING

TIMING AND SETTING THE SINGLE-CYLINDER DOBBY

25. When a loom with a dobby attached is being started, all the motions connected to the loom proper should be set as on a plain loom before the setting of the dobby is attempted. Although the setting of this part of a fancy loom may seem to be a difficult problem, in reality, after it has been carefully studied, it will present no very great

Digitized by Google

obstacle. Each part of the dobby has an exact setting, which bears a definite relation to some other part of the loom and, if these parts are set in their proper relation to each other, the dobby will be found to be exact in its action as a whole. The rules for setting that are given here will be found to apply equally well to any dobby. Later on, references will be made to the setting and timing of the auxiliary motions attached to the dobby, but it should be borne in mind that the settings here given are fundamental and apply to all cases.

26. Setting the Dobby Crank-Shaft.—In case the dobby is driven from the crank-shaft, turn the loom until its crank-shaft is on the bottom center; keeping the loom in this position, move the connecting-rod on the dobby until the dobby crank-shaft is on its back center. This can be accomplished by loosening the setscrews that hold the gear on the end of the dobby crank-shaft. After this has been accomplished, tighten the setscrews. When in this position, the rockers should be perpendicular. Should they not be in this exact position, they may be adjusted by loosening the setnuts at the bottom of the connecting-rod and then moving the rocker until it is in the desired position. When the dobby is driven from the cam-shaft, place the loom crank-shaft on its bottom center. Have the crank to which the connecting-rod of the dobby is attached on its back center, and adjust the rockers so that they will be perpendicular when the different parts are in the positions stated.

27. Setting the Knives.—When these adjustments have been made, turn the loom until the bottom knife is at its extreme inward position and then set the knife about $\frac{1}{4}$ inch back of the notches in the hooks; turn the loom over and set the top knife in the same manner. These adjustments may be made by means of the adjustable hooks that connect the knives to the rockers. If the different parts are set in this manner, the top knife will be directly over the bottom knife when the rocker is perpendicular; both

Digitized by Google

knives will have an equal lift at this point and the harnesses that are changing will consequently be level. Thus, the harnesses that are changing are level when the crank-shaft of the loom is on its bottom center. It should be noted that as an open shed is being dealt with, some of the harnesses will remain up and others down while the rest of the harnesses are changing. Those harnesses, however, that are changing will be level when the loom and the dobby have been set in the manner described.

28. Setting the Cylinder.—If the cylinder of the dobby is driven by a worm-gear, this gear should be set so that the cylinder will be brought to a pause when the knives reach the limit of their throws. When in this position, the chain bar should be directly under the fingers, so that the pegs in the bar will be giving the fingers their greatest lift.

On dobbies having two rows of pegs to each bar of the pattern chain, the first row operates the fingers connected to the bottom hooks. Consequently, when setting the cylinder on such a dobby (the cylinder having the worm-drive), care should be taken to have the bottom knife moving in and the top knife moving out when a new bar of the pattern chain is being forced under the fingers. This will cause the pegs in the first row of the pattern chain to operate when the bottom knife is in and the second row to operate on the next pick, or when the top knife is in. This setting will result in the correct fingers being acted on by the pegs on each pick of the loom.

Another rule for setting the cylinder with the worm-drive and one that applies to either a single- or double-index dobby is as follows: Have one of the knives as far in as it will move. Loosen the gears that drive the cylinder and turn the cylinder until the pegs operating the hooks for the knife that is in are giving the fingers of the dobby their full lift. With the cylinder in this position, turn the worm until the straight part, or that portion that gives the pause, is operating on the worm-gear on the end of the cylinder.

Digitized by Google

Considerable care should be taken to have the chain bar directly under the fingers when the cylinder stops, so that the pegs will lift the fingers and bring down the hooks, causing them to be caught by the knife when it starts on its outward stroke. The missing of the hooks by the knives will be found to be a common fault in dobbies and therefore should be carefully attended to.

29. Regulating the Shed.—As the same size shed cannot be employed in all cases, several provisions are made by which the dobby may be regulated to give a larger or smaller shed as may be required. The crank on the crank-shaft of the dobby contains a slot in which is fastened the stud to which the connecting-rod is joined. By moving this stud in, or nearer to the crank-shaft, the end of the connecting-rod is brought nearer to the center of the circle that it describes and the throw of the connecting-rod is shortened; but by shortening the throw of the connecting-rod, the throw of the knives and the lift of the harnesses are also shortened, and a smaller shed is produced. By moving this stud out on the crank, or farther from the crank-shaft, the opposite effect will be produced. There is also a slot in the arm of the rocker, to which the connecting-rod is attached by means of a stud. By moving this stud in or out in the slot, the lift of the knives will be lengthened or lessened, respectively.

When the throw of the crank on the dobby has been altered by any of these methods, it will be necessary to reset the knives by adjusting the hooks that connect them with the upright arm of the rocker. These hooks contain setnuts, by means of which the distance of the knives from the upright arm of the rocker may be regulated.

30. Lift of the Harnesses.—The upper parts of the harness levers in all dobbies contain a number of notches, and the harnesses that are attached by the harness straps and wires to the upper notches receive a greater lift than the harnesses connected to the lower notches, since the upper part of the levers will move through a greater space;

Digitized by Google

consequently, it is the custom to attach the back harnesses to higher notches in order to give them a greater lift.

Special notice should be taken of the device adopted on some dobbies by means of which a greater lift is given to the back harnesses. On these dobbies, the rocker at the back of the dobby is made somewhat longer than the one at the front, thus giving to that end of the knives a greater throw, and consequently a greater lift to the back harnesses. To accommodate the greater throw of the knives the girts against which the jacks rest are made to slant toward the back, thus allowing the jacks at the back of the dobby to set farther in toward the loom than those at the front.

31. Skipping.—The fault that is probably most frequently met with in connection with the dobby is that known as **skipping;** that is, the failure of any one harness to lift when it should, and consequently the filling floating over the ends drawn through that harness when, in reality, the filling should be under those ends. This fault may be caused in several ways. A peg in the pattern chain may become bent in such a manner that, when the bar of the chain in which it is placed comes under the fingers, the peg instead of lifting the finger that it should operate will pass between it and one of the adjacent fingers.

In some cases the cylinder may be moved slightly to one side, thus throwing the pegs out of their proper positions, in which case some of the pegs may not lift their fingers. This fault may be easily remedied by loosening the setscrews that hold the cylinder in place and moving the cylinder until the pegs in the pattern chain come directly under the fingers.

A short peg placed in the pattern chain will sometimes produce skipping, since it will not lift the finger high enough to cause the hook to become engaged with the knife.

If for any cause one of the hooks should become bent, its action is very apt to become uncertain, since it is liable to become bound by the sides of the rack through which it passes. In such a case the hook will not fall when the finger is lifted, and consequently it will not engage with the knife. In other

Digitized by Google

cases, the hook may just engage with the knife but slip off before the harness has received its full lift and the shuttle has passed through the shed.

In any case where skipping is noticed, the ends that are affected should be traced from the cloth to the harnesses, in order to ascertain through which harness those ends are drawn. Then by carefully watching the fingers and hooks actuating that harness, the cause of the difficulty will generally become apparent.

TIMING AND SETTING THE DOUBLE-CYLINDER DOBBY

32. The cylinders in a double-cylinder dobby must be stopped and started at just the right instant or mispicks will be made in the cloth; consequently, it is quite necessary that the different parts should be set with great care.

The worm-gear that drives the cylinders should be set in a similar manner to that in the single-cylinder; that is, it should be set so that the cylinder will be brought to a pause when the knives are at the limit of their throws. The cylinders should also be set so that the pegs in the pattern chain will give to the fingers a full lift when the cylinder is on the pause. This will insure the hooks being caught by the knives as they move outwards.

33. Setting the Clutch Gear.—When changing from one cylinder to the other, the clutch lever about to be thrown into connection should be directly opposite one of the cut-outs when the riser on the repeat chain comes in contact with its lever; otherwise, the cylinder will not be turned and no harnesses will be lifted on the first pick. These clutch gears are adjustable and can be set by moving a setnut on the gear so that the open space will be in a correct position to receive the clutch lever when it is thrown. Care should also be taken to have the roller that holds the cylinder securely in position while it is not being turned, so placed that when the cylinder is stopped

Digitized by Google

by the lever being withdrawn it will be in position to hold the cylinder firmly until it is required again.

34. Setting the Repeat Motion.—One important point should be carefully noted in relation to the double-cylinder dobby. The pawl that operates the ratchet of the repeat motion is worked by a cam driven by the top part of the upright arm of the rocker; consequently, when the top knife is moving in, a high part in the link on the repeat chain will raise the lever and thus change the cylinder, and on the first pick of the new weave the harnesses will be lifted by the top knife.

The shuttle should be on the shipper side of the loom when a change from one cylinder to the other is being made. The rocker must be set so that the top knife will be moving the hooks and thus raising the harnesses when the loom is picking from the dobby side; that is, the cylinders should start to change when the shuttle is on the shipper side, but on the first pick of the new weave the shuttle should be picked from the dobby side.

POWER AND SPEED

35. Since more harnesses are employed when using a dobby, more power will be required to drive the loom than is the case with the ordinary plain loom. The necessary power will also depend to a certain extent on the number of harnesses being used, but as a general rule it may be stated that where five plain looms are taking 1 horsepower to drive them, the same power will drive only four looms with a dobby attached.

The speed of a loom with a dobby attached is less than that of a plain loom, and depends on the number of harnesses used and on the style of weave and character of the yarn. On some weaves it may be necessary to run the loom as low as 140 picks per minute, while on others it is possible to attain a speed of 180 picks. As a rule, when plain looms have dobbies applied, the speed is reduced 10 to 20 per cent.

Digitized by Google

Digitized by Google

LENO ATTACHMENTS

INTRODUCTION

1. When weaving fabrics in which any warp thread is caused to turn partly around another thread or threads while in the loom, it becomes necessary to attach special appliances to the loom in order to give this turn to the warp ends. The word **leno** has become, during recent years, a general term applied to all classes of such cross-weaving.

In such cloths, the ends, and consequently the picks, instead of lying in parallel lines, are twisted and pulled out of a straight course. This is caused by some of the ends being under the control of 2 harnesses, which can lift them to the right or to the left of one or more other ends, thus producing a crossing of the ends. Crossing the ends on one pick and not crossing them on another is the means whereby such fabrics are produced.

2. A pure, or plain, gauze fabric, the production of which will be considered, is one in which an end of the warp is brought upon one side of a separate end on one pick, and on the next pick is brought up on the other side of the same end, whereas in the ordinary plain weave the warp ends lie parallel to each other and are alternately raised over and depressed under the picks of filling. The gauze plan of interweaving may be said to be the firmest that it is possible to adopt when the amount of material used is considered. It is impossible to make a close fabric by this method, and frequently the gauze method of interweaving is used to obtain in the cloth an open effect that will give to it a very light appearance. In order to weave such fabrics, it is

For notice of copyright, see page immediately following the title page

Digitized by Google

necessary to attach special appliances to the loom; and it is the object of this Section to deal only with these appliances in so far as they may be considered from a mechanical standpoint, and not to consider the designing of the many different and elaborate leno effects that may be obtained.

Fig. 1 shows the manner in which the ends interlace in gauze weaving; a, a_1 represent the 2 warp ends, while each pick is marked in its order of interlacing. It will be

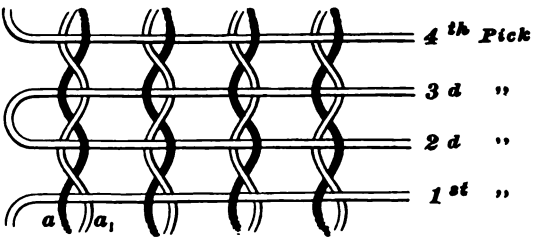

FIG 1

noticed that the end a is always over the pick of filling but under the other warp end a_1 where these ends cross each other; while the end a_1 is always under the pick but over the end a between the picks, also that on the first pick a is on the left of a_1 and on the second pick on the right.

A pure gauze weave, such as is shown in Fig. 1, always repeats on 2 ends and 2 picks, since all the even-numbered picks are alike and all the odd-numbered are alike, the same being true with regard to the ends.

3. Doup and Ground Ends.—The end a is known as the **doup, douping, crossing** or **whip end,** while the end a_1 is known as the **ground end.** When examining a piece of cloth constructed with the pure gauze weave, it is impossible to distinguish definitely which are the ground ends and which the doup ends; nor is it possible to distinguish the face of the cloth from the back, since the interlacings of the doup and ground ends of a pure gauze fabric are similar, and the ground end has the same appearance if viewed on the back of the cloth as the doup end when observed on the face, and vice versa.

Digitized by Google

LENO WEAVING ON SINGLE-LIFT, OR CLOSE-SHED, DOBBIES

BOTTOM DOUPS

4. Harnesses.—In the production of gauze fabrics, two sets of harnesses are required—one for the ground ends and the other for the doup ends. The harnesses for the ground ends are of ordinary construction and the ends are drawn through them in the ordinary manner, but a special arrangement of harnesses is provided for the doup ends. These ends are required to be lifted on both sides of the ground ends and are first drawn through the eyes of an ordinary harness at the back, passed beneath the ground ends, and then drawn through what are known as *doups*, which are connected to a *doup harness*. In this Section, when referring to doups, those known as *bottom doups* and described in Art. **7**, should always be understood unless otherwise mentioned.

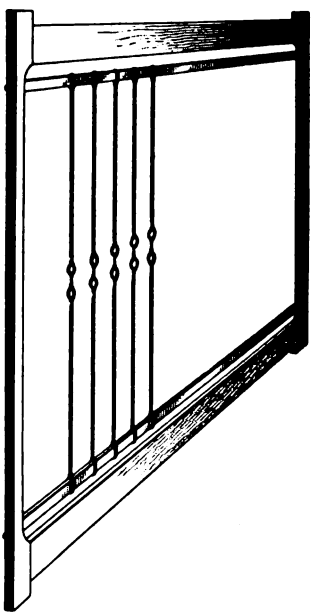

FIG. 2

5. The Standard Harness. Fig. 2 is an illustration of the harness known as the **standard harness.** The frame of this harness is similar to those on ordinary harnesses, but the heddle is of a somewhat different construction. The standard heddle, as shown in the illustration, contains two eyes. In some cases these

Digitized by Google

eyes are both of the same length, while at other times one eye will be found to be considerably longer, this being a matter of choice, but a heddle with one eye longer than the other will not chafe the yarn forming the doup as much as when both eyes are of the same size. When the heddles used have eyes of unequal length, the longer eye is uppermost in the case of bottom doups and is below the smaller eye when using top doups.

6. The Doup Harness.—Fig. 3 is an illustration of a **bottom-doup harness frame** with several doups attached.

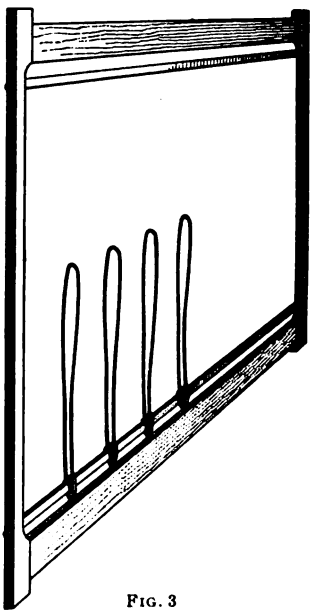

FIG. 3

The frame is similar to that found on an ordinary harness, the difference being that it carries no heddles. The doup-harness frame is the one to which certain loops of worsted thread are attached, and it is used in connection with the standard harness through the heddles of which these loops are passed. A cord is stretched tightly across the lower part of the doup-harness frame; this is shown, in Fig. 3 and other figures, between the heddle bar and the bottom part of the harness frame and close to the latter. It is not essential that the cord be placed in the exact position shown; it may be higher up and nearer to the heddle bar, or it may be about ¼ inch above the heddle bar; in fact, the latter position is often adopted. It is secured at each side either by being passed through holes in the side pieces of the harness frame and tied there, or by being passed over hooks fixed on the inside of each side piece of the harness frame. Sometimes the doups are merely passed around the heddle bar and no cord is used.

Digitized by Google

Threads, or *doups*, as they are known, are sewed to this cord in the exact position they should occupy. When for a fancy leno, they are spaced off in such positions as are required by the pattern. This thread, or doup, is generally made of worsted on account of the elasticity and wearing qualities of that material.

7. Right- and Left-Hand Doups.—Fig. 4 shows the way, or manner, in which the standard and doup harnesses are placed when combined in the loom, the doup harness being in front of the standard harness. One end of the doup is fastened to the cord near the bottom frame of the doup harness, while the other end is passed around the heddle bar, through the bottom eye of the standard heddle from one side, then back through the upper eye and, after being passed around both the cord and the heddle bar, is fastened to the cord at the same place that the first end was fastened. In Fig. 3 the proper method of passing the doups around the heddle bar of the doup-harness frame is shown; in Fig. 4 and other figures, the doup is simply indicated as being attached to the cord. In case the loop formed by drawing the doup through the standard heddle comes at the right of the standard heddle, as in Fig. 4, the doup is known as a **right-hand doup.** When it is formed at the left of the standard heddle, the doup is known as a **left-hand doup.** No ends are drawn through the heddle on the standard harness, but the ends *a*, known as the doup ends, are drawn through the loop that is

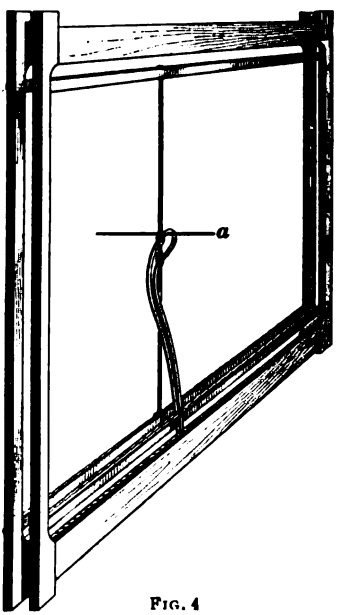

FIG. 4

Digitized by Google

formed by the doup passing through the standard heddle, as shown in Fig. 4.

A few very important points should be noted in connection with the manner in which these 2 harnesses are joined. Each harness, whether doup or standard, has its own set of harness straps and its own set of levers. The doup harness may be lifted while the standard is down, but on the other hand, if the standard is lifted, the doup harness must also be

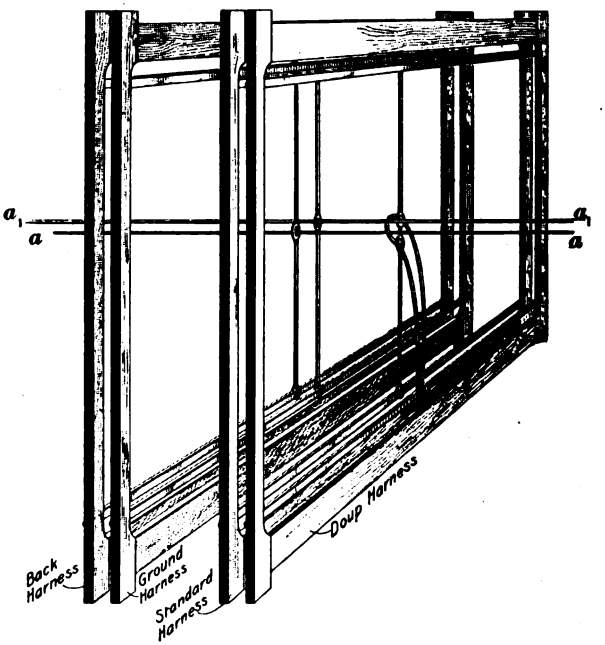

FIG. 5

raised on account of the doup part of the harness passing through the two eyes of the standard heddle. If the standard should be raised without also raising the doup harness, the doups will be strained or broken. These points should be constantly kept in mind when studying the workings of the leno motion.

8. Drawing in the Ends.—The next point to be considered is the manner in which the ends are drawn through

Digitized by Google

the harnesses when producing a pure gauze weave, reference being made to Fig. 5, which shows a left-hand doup. The doup end *a* is drawn through the back harness and then passed through the doup, while the ground end a_1 is drawn through the third harness and crossed over the doup end; thus, while it is on the right of the heddle on the back harness, through which the doup end is drawn, it is on the left of the doup. It is necessary to draw the doup end *a* through the heddle of a separate harness, as shown in this illustration, in order to lift the end when the doup harness rises and the standard remains down. In this Section the doup harness will be considered as the first, the standard harness the second, the harness through which the ground end is drawn the third, and the harness at the back the fourth harness.

9. Drawing-In Draft.—Fig. 6 illustrates the method that is generally adopted to show on paper the manner of drawing in the ends for a leno weave, and is often used in the mills. The standard and doup harnesses are shown together. The harness through which the doup end is drawn at the back is marked fourth harness, while the harness through which the ground end is drawn is marked third harness. The crosses show that the ends connected to them are drawn through those harnesses, the ends being shown by lines. The end *a* is to be drawn through the fourth harness and then through the doup, while the end a_1 is to be drawn through the third harness and crossed over the end *a*. This method of drawing in the ends will give the same order as that shown in Fig. 5.

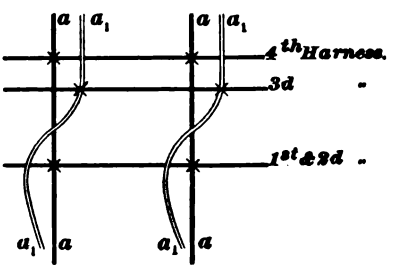

FIG. 6

If a left-hand doup is used, the doup end *a* must be on the left-hand side of the standard heddle, and if

Digitized by Google

a right-hand doup, on the right-hand side of the standard heddle.

10. Reeding the Ends.—When drawing in the ends for weaves of this class, the crossing end and the end around which it crosses should always be drawn through the same

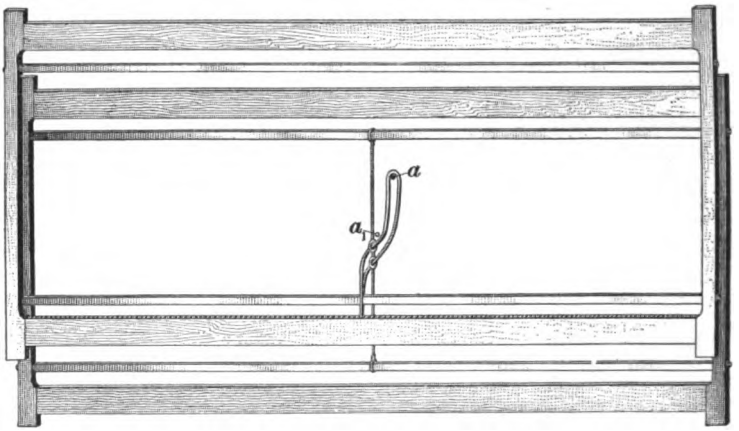

FIG. 7

dent, since this crossing is produced between the standard harness and the last pick inserted in the cloth rendering it

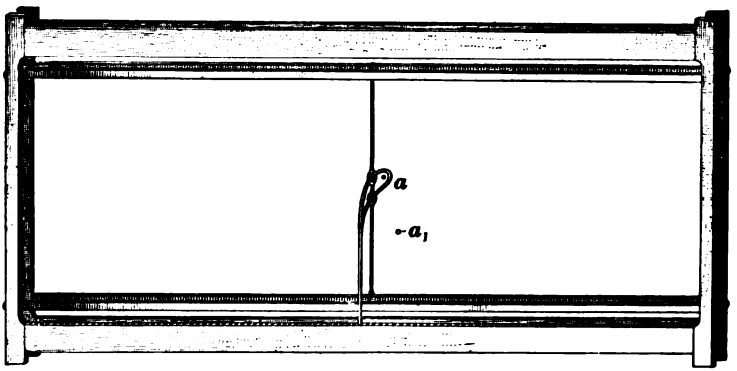

FIG. 8

impossible for the ends to be crossed in front of the reed if drawn through separate dents. The reed, therefore, would prevent the formation of the shed, and the ends of the warp

Digitized by Google

would be broken. In order to permit more space for these ends when the crossing takes place, since the ends are also crossed between the standard harness and the harnesses through which the ends are drawn at the back, the 2 back harnesses are generally placed as far back as possible, while the doup and standard harnesses are placed as far front as

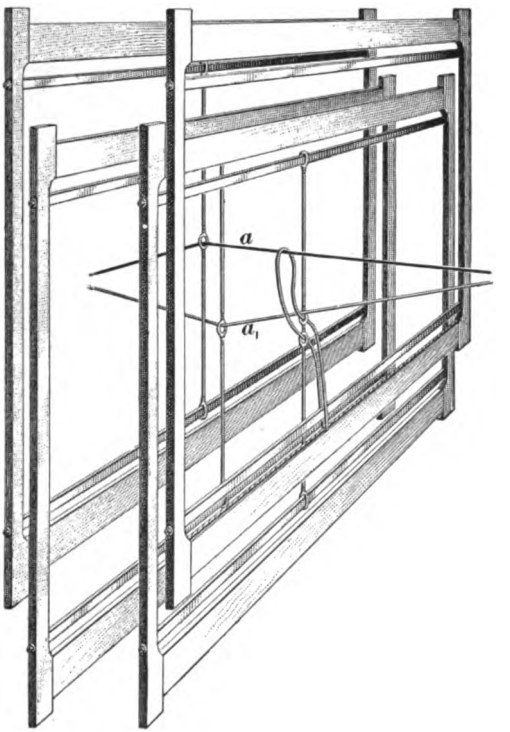

FIG. 9

possible; that is, the doup and standard harnesses are operated by the front levers of the dobby, while the other harnesses are operated by levers near the back of the dobby.

11. Operation of Harnesses.—Figs. 7 and 8, which show two views of a standard and doup harness with a right-hand doup, will serve to illustrate the method of operating these harnesses when producing the crossing of the warp

Digitized by Google

ends. In Fig. 7, which may be said to represent the first pick of the weave, the standard remains down, while the doup harness is raised. The doup end is raised by a harness not shown in this figure but shown as the fourth harness in Fig. 6. On this pick the doup end *a* is brought up on the right-hand side of the ground end a_1, which is drawn through

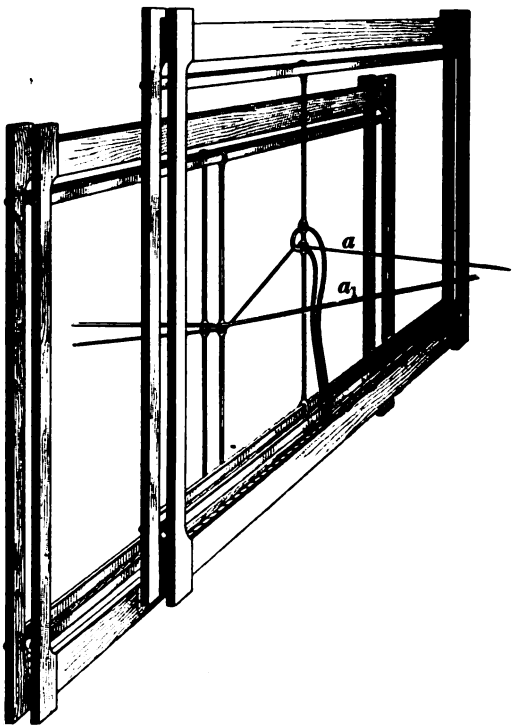

FIG. 10

a harness not shown in this figure but shown as the third harness in Fig. 6.

In the other view, Fig. 8, which represents the next pick of the weave, the standard and doup harnesses are both raised, and as a result the end *a* that is drawn through the doup harness is brought up on the left-hand side of the ground end a_1 and thus a crossing of the ends in the warp takes place. By this means the doup end *a* will always be above,

Digitized by Google

while the ground end a_1 will always be below, the picks of filling.

Figs. 9 and 10 show two other views of the manner of operating the harnesses; in this case the doups shown are left-hand, since the doup end passes on the left of the standard heddle.

In Fig. 9, the fourth harness, through which the doup end is drawn at the back, is shown raised, thus raising the doup end. When, however, this harness is raised, the doup harness is also lifted, permitting the end a to be raised and to bring with it the doup of the doup harness, which slips through the eyes of the standard heddle. In this case the doup end a is brought up on the left of the ground end a_1.

In Fig. 10, which represents the positions at the next pick of the weave, the standard and doup harnesses are both raised, while the fourth harness is lowered, thus causing the doup end a to be brought up on the right of the ground end a_1. In this manner the turn is made in the warp ends, and, as a result, the ends and picks will lie in the cloth in a manner similar to that illustrated in Fig. 1.

12. In all these illustrations, the harness through which the ground end a_1 is drawn always remains at the bottom, and in order to make the turn in the ends, it is necessary for the doup end a to come down to the ground end a_1 at each pick. This is the manner of operating the ends that takes place in a single-lift dobby, where all the warp ends are brought to the bottom of the shed at each pick. This part of the operation will be further spoken of when dealing with the mechanism that operates the harnesses.

The principal form of shedding mechanism used for weaving lenos is the dobby. Dobbies are spoken of either as single-lift or double-lift machines, the general acceptation of the term single-lift dobby being one with but one lifting knife, or blade, the term double-lift dobby generally being applied to a dobby equipped with two lifting knives. There is some difference of opinion as to the exact meaning of these terms but the explanation given is the one usually accepted.

Digitized by Google

A single-lift dobby forms a close shed since all the ends are lowered to the bottom of the shed between each 2 picks.

Double-lift dobbies, as ordinarily constructed and used in textile mills, especially cotton mills, form an open shed since certain ends may remain up while the shed is being changed in preparation for the next pick. However, by the application of special mechanism or by making other changes the ordinary double-lift dobby can be caused to make a shed other than an open shed.

A close-shed dobby is therefore usually understood to be a single-lift dobby and an open-shed dobby generally infers a double-lift dobby. In the consideration of shedding mechanisms for weaving leno fabrics, it is the difference in the sheds, whether close or open or any other style of shed, that is of importance, the question of single or double lift being immaterial except so far as it means, or causes a closed or an open shed. Therefore, throughout this Section the terms close shed and open shed will be used in considering the shedding mechanism, rather than the terms single- and double-lift.

13. Weaving Plain Cloth.—With the ends drawn through the harnesses in the manner shown in Figs. 9 and 10, it is possible to weave ordinary plain cloth. Although the most practical method of weaving plain cloth is the ordinary one in which the ends of the warp are drawn alternately through two harnesses, each end being controlled by only 1 harness, the possibility of weaving plain cloth with the ends drawn through the harnesses in the manner required for weaving plain gauze is a very important advantage, since in many fancy gauze fabrics the pattern is formed by alternately weaving plain cloth and plain gauze as desired. Fig. 9 shows the doup end raised by means of raising the doup and fourth harnesses, while the ground end is lowered; this may be considered as the first pick of a plain weave. On the next pick, the doup, standard, and fourth harnesses will remain down, while the third harness, through which the ground end is drawn will be raised, thus causing that end to

Digitized by Google

float over the pick of filling. The position of the harnesses for this pick is shown in Fig. 11, where a shows the position of the doup end and a_1 shows the position of the ground end. On the next pick, the harnesses resume the position shown in Fig. 9 and the doup end floats over the pick of fill-

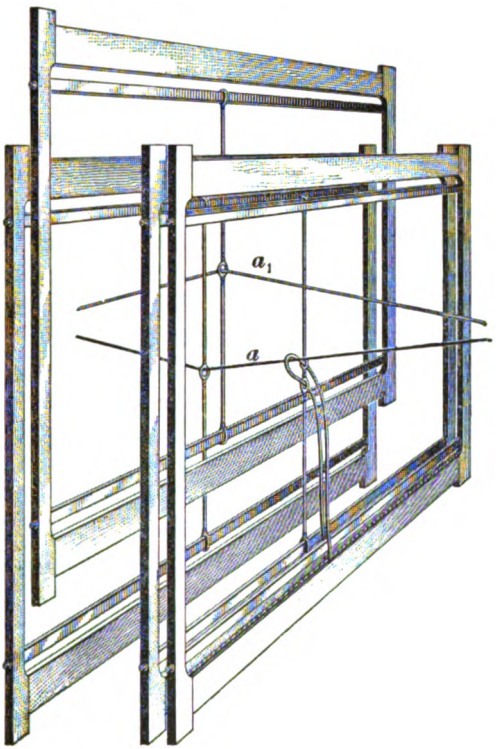

FIG. 11

ing, while the ground end is underneath. The next, or fourth, pick is similar to the second, shown in Fig. 11; consequently, plain cloth will thus be woven.

Plain cloth may also be produced by raising the harnesses as shown in Fig. 10 on one pick, and on the next pick raising them as shown in Fig. 11. This method of lifting the harnesses will produce plain cloth, but is not as satisfactory as the former, due to the additional strain brought on the ends

Digitized by Google

when raised as shown in Fig. 10. On this account, when doup ends are used in weaving plain cloth, the first method explained is always employed.

14. The Slackener.—When the standard and doup harnesses are both raised and the harness through which the doup end is drawn at the back remains down, as shown in Fig. 10, considerable strain is brought on the doup end. This will be perfectly clear from studying the illustration. Consequently, to prevent the breaking of the ends, some arrangement must be employed to ease the doup end and at the same time keep it tight enough to prevent any slack yarn.

This is generally accomplished by using an attachment known as a **slackener** or **easer,** which contains a rod over which all the doup ends pass. Such an arrangement is shown in Fig. 12; the ground ends a_1 pass from the warp beam c over the whip roll c_1 of the loom, while the doup ends a pass from the beam over a rod d supported at each end by an arm d_3, attached to the shaft d_2 to which a lever d_1, is also attached. Connected to the end of this lever is a harness strap d_4 fastened to the back lever of the dobby and consequently raised by that lever, while the spring d_5 serves to pull the lever back into position when it is released by the action of the harness lever.

The operation of this mechanism is as follows: Whenever the doup and standard harnesses are raised and the harness at the back, through which the doup end is drawn, remains down, that lever of the dobby to which the slackener is connected must be raised, thus raising the lever d_1. When this lever is raised, the rod d will be drawn in, thus permitting the doup ends to become slack; but it must be understood that this looseness of the ends must be no more than what will be taken up by the action of the doup and standard harnesses rising together. This will be further considered when dealing with the settings of the dobby for leno work.

In most cases when weaving leno fabrics, it is necessary to place all the doup ends on a separate beam on account of

Digitized by Google

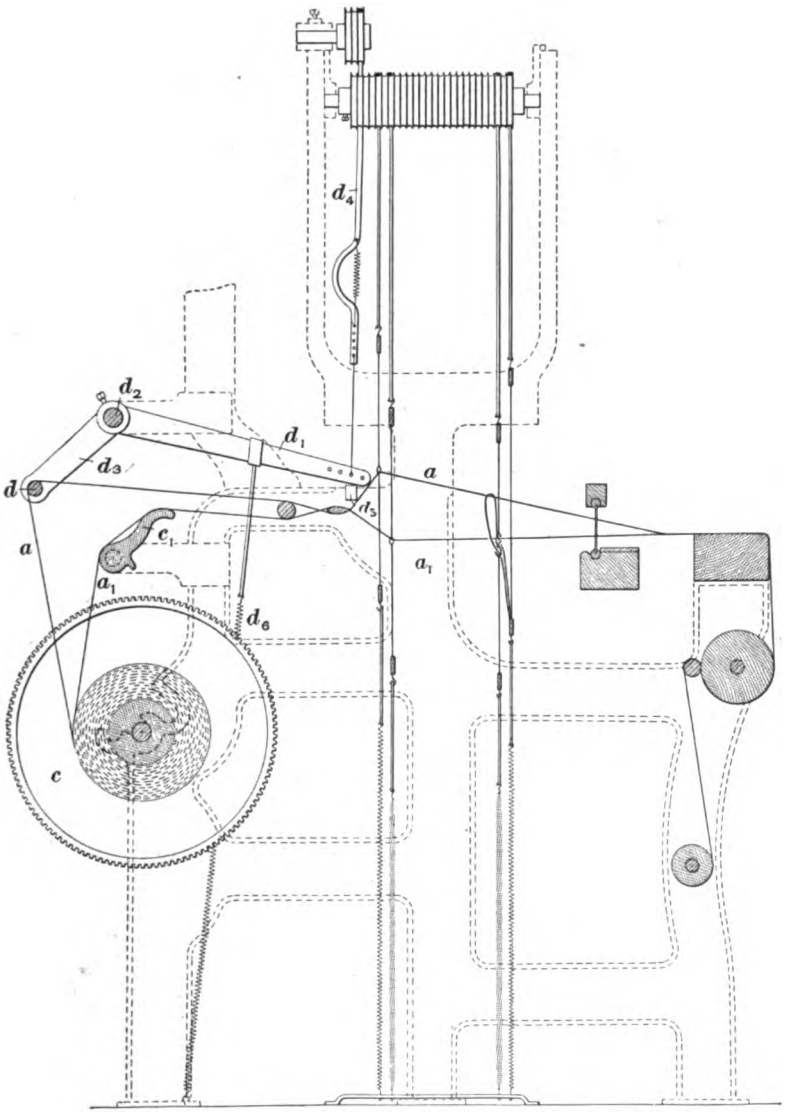

FIG. 12

Digitized by Google

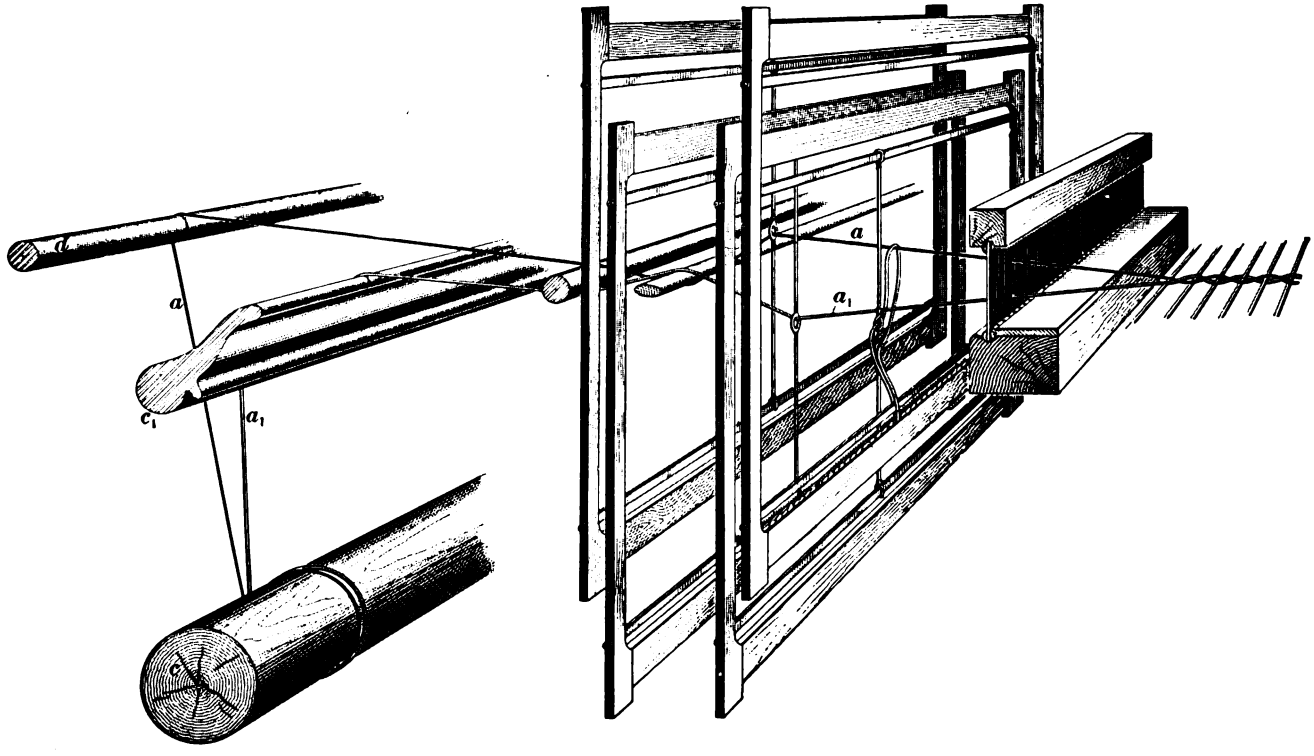

FIG. 13

Digitized by Google

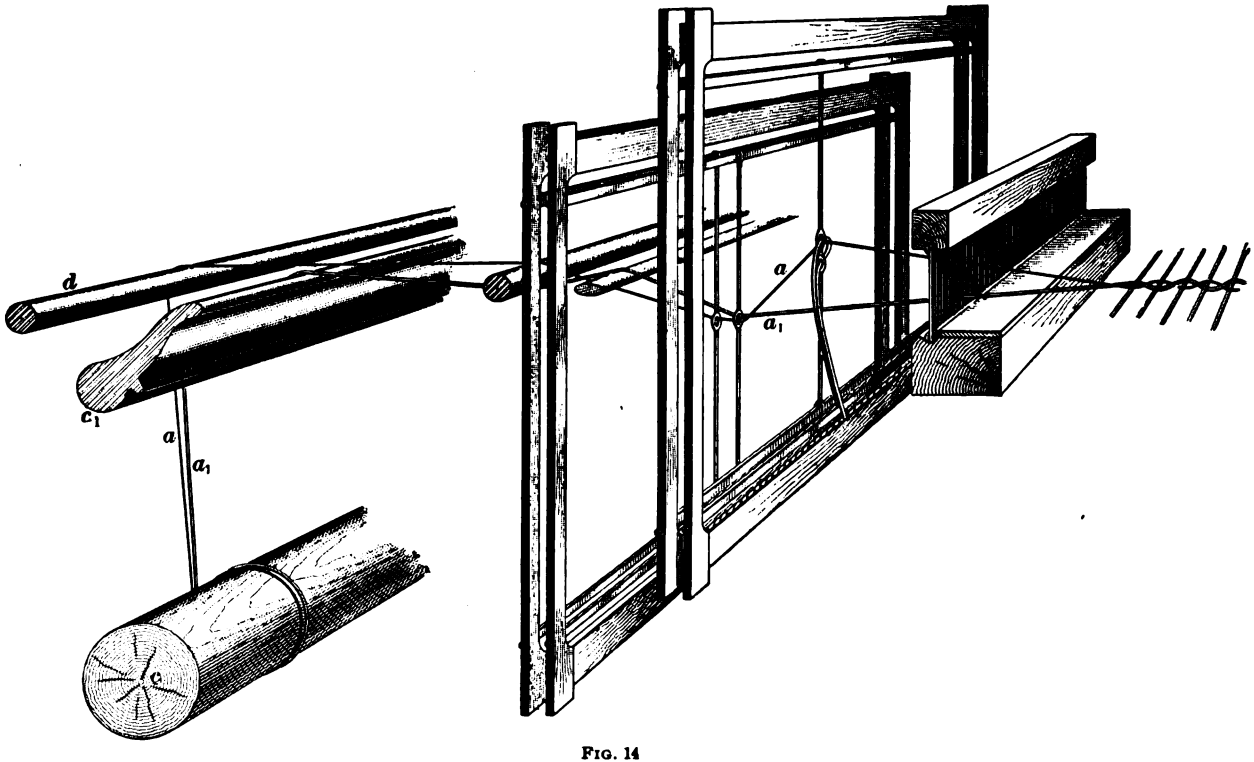

FIG. 14

Digitized by Google

the greater contraction of these ends due to their being pulled out of a straight line, but in a pure gauze consisting of but two ends, the contraction of both will be about equal; consequently, only one beam is necessary, although even in this case it is advisable to place the doup ends on a separate beam in order to reduce as much as possible the strain and wear on both the doups and the doup ends.

Figs. 13 and 14 illustrate two successive picks of a pure gauze weave, showing the beam, together with the whip roll and slackener rod, also the position of the slackener during both picks. In these figures, c is the beam from which the ground end a_1 passes over the whip roll c_1 and through the third harness. The doup end a passes from the beam c over the slackener rod d, through the back harness, and then through the doup. The lease rods are shown in these figures, but, as they do not affect the weave, they will not be considered.

In Fig. 13, the doup harness and the back harness, through which the doup end is drawn, are both raised, thus bringing the doup end up on the right of the ground end a_1, this being a right-hand doup. In this case the slackener rod d is some distance back, this being its ordinary position.

On the next pick, as shown in Fig. 14, the doup and standard are both raised, while the harness at the back, through which the doup end is drawn, remains down. In this case a longer length of the doup end is required, and, consequently, the slackener rod d is moved in, as shown in the illustration, thus permitting this operation of the harnesses to take place without any undue strain being brought to bear on the warp ends. The manner of thus bringing the slackener rod in closer to the loom was explained in connection with Fig. 12.

15. The Harness Chain.—Before building a harness chain that will produce a pure gauze weave, the following points should be considered: (1) When the doup harness is raised and the standard is lowered, the back harness, through which the doup end is drawn, must always be raised, in order

Digitized by Google

to bring up the doup end. (2) When the doup and standard are both raised, the back harness, through which the doup end is drawn, must always be lowered, in order to permit the crossing of the ends. (3) The harness through which the ground end is drawn is never raised. (4) When the doup and standard are both raised, the lever that actuates the slackener rod must always be lifted, in order to relieve the doup ends. It should be remembered that these points refer to a pure gauze weave on a close-shed dobby, using bottom doups. Exceptions to these will be noted later.

Fig. 15 shows the harness-chain draft that would be used to produce a pure gauze weave with the ends drawn in as shown in Figs. 13 and 14. Four picks of the weave are shown, although the weave repeats on 2 picks, since the third pick is exactly like the first and the fourth like the second. The picks are marked in their order, and it is clearly shown which harness each row of pegs operates. The filled-in squares represent levers raised and, consequently, harnesses and ends raised, while blanks represent levers, harnesses, and, consequently, ends lowered. By comparing the first and second picks of the harness chain, or Fig. 15 with Figs. 13 and 14, they will be found to correspond. In Fig. 13, the doup and back harnesses are raised, while the others are down; therefore, in Fig. 15, on the first pick, marks are placed in the squares representing the doup and back harnesses, while the others are left blank. In this instance the slackener is not raised; consequently, the lever of the dobby that actuates the lever of the slackener will remain down and the square will be left blank, as is the case in Fig. 15.

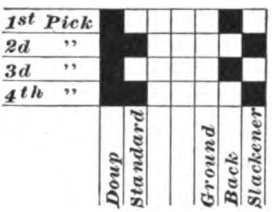

FIG. 15

On the next pick, the doup and standard harnesses are raised, the other harnesses remaining down; consequently, in Fig. 15, on the second pick, marks are placed in the squares that correspond to the standard and doup harnesses, the others being left blank.

Digitized by Google

When the standard and doup harnesses are both raised, it is necessary also to raise the slackener; consequently, a mark is placed in the square that corresponds to the slackener for that pick. This completes the weave, since the third and fourth picks are simply repeats of the first and second. Thus, with Fig. 15 as a harness-chain draft, and with the ends drawn in the harnesses as shown in Figs. 13 and 14, a pure gauze cloth similar to Fig. 1 will be woven.

TOP DOUPS

16. Distinction Between Top and Bottom Doups. Two methods of weaving with doup harnesses are in common use in producing leno fabrics. When the doup is placed at the bottom of the harness frame, similar to those previously illustrated, it is known as a **bottom doup;** frequently, however, it is placed at the top of the harness frame, in which case it is known as a **top doup.** When bottom doups are used, the cloth will be woven with the wrong side uppermost in the loom, the right side of the cloth being uppermost when top doups are used. This is only noticeable in lenos other than pure gauze, since both sides of this cloth are alike. Although bottom doups are in general use, the top doups possess some advantages, the principal ones being that the cloth is right side up when being woven and any defects in the weaving can easily be detected. Broken top doups are also much easier to repair than broken bottom doups.

When weaving a pure gauze cloth, bottom doups are almost always used, since both sides of the cloth are similar. In certain forms of leno, however, better results are obtained by using top doups, and, since a somewhat different arrangement must be adopted in these cases a short description of weaving with this method is given.

With bottom doups, it is possible to raise the doup harness without lifting the standard, but when the standard is raised, it is necessary also to raise the doup harness. With the top doup, however, this condition is reversed; that is,

Digitized by Google

the standard harness may be lifted without raising the doup harness, but it is not possible to raise the doup harness without at the same time lifting the standard harness. Again it will be noticed that with the bottom doup, the ground end was crossed over the doup end in being drawn through the harnesses, whereas in the case of the top doup, the ground end is crossed under the doup end.

When dealing with top doups it is necessary to keep in

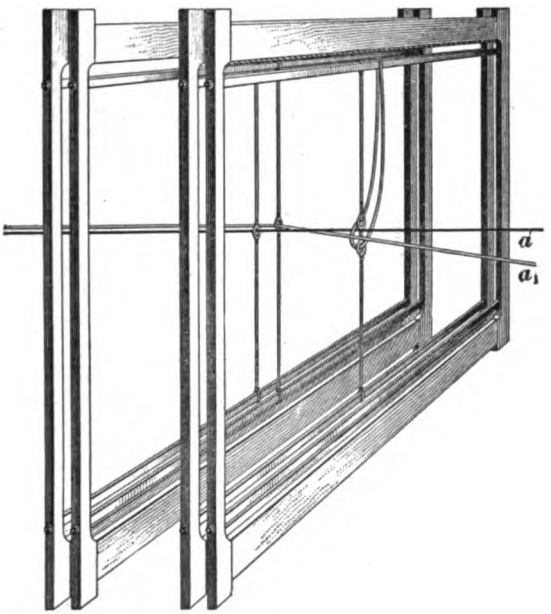

FIG. 16

mind the following important points, a pure gauze weave being understood in this case as well as in all former cases: (1) The ground end is lifted at each pick. (2) When the standard harness is lifted, the doup and back harnesses remain at the bottom. (3) When the doup and standard harnesses both remain down, the back harness through which the doup end is drawn, is lifted. (4) When the harnesses are lifted in the manner described in (3), the harness chain must always be pegged to work the slackener.

Digitized by Google

17. Drawing In.—Figs. 16, 17, and 18 give three views of a left-hand top-doup arrangement. The doup end is drawn through the fourth, or back, harness and passes through the loop of the doup harness, while the ground end passes to the right of the heddle of the back harness, crosses beneath the doup end, and then passes to the left of the standard heddle, these two ends being then drawn in the same dent.

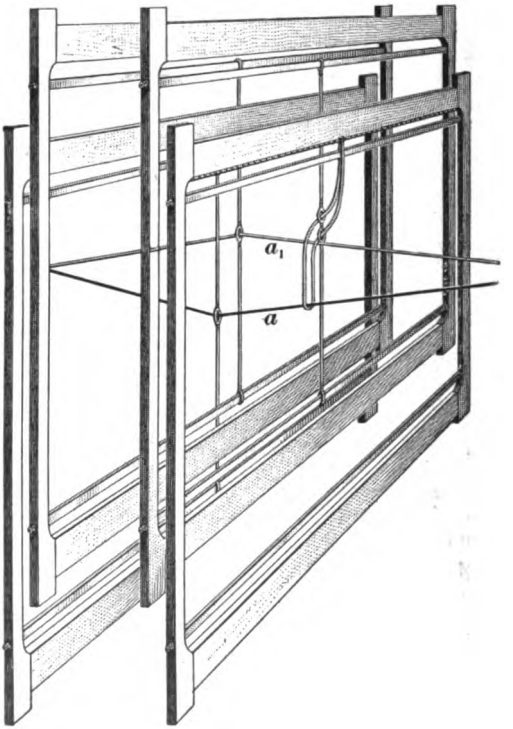

FIG. 17

Fig. 17 shows a view of the first pick of a gauze weave, top doups being used; in this instance the ground harness together with the standard is lifted, while the doup and back harnesses remain lowered. On the next pick, shown in Fig. 18, the back harness, together with the ground harness, is raised, while the doup and standard harnesses remain

Digitized by Google

down, thus making a crossing of the ends, as is shown in the illustration. On this last pick, the slackener rod should be brought in, thus relieving the yarn and permitting the crossing of the ends without any undue strain.

18. The Harness Chain.—Fig. 19 shows the harness-chain draft required to operate the harnesses in the manner

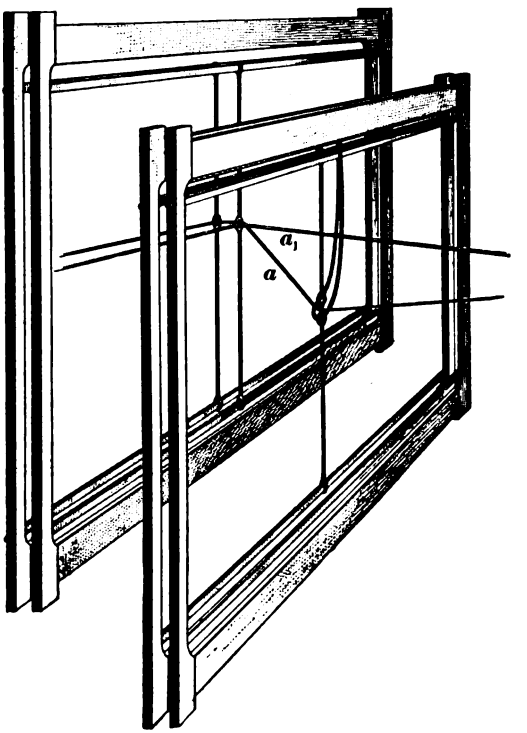

FIG. 18

shown in Figs. 17 and 18. With the harness chain built in this manner, the standard and ground harnesses will be lifted on the first pick, since the filled blanks represent harnesses lifted; this corresponds with Fig. 17, which represents the first pick of the weave. On the second pick, as shown in Fig. 19, the ground and back harnesses are lifted together with the lever operating the slackener; this corresponds to

Digitized by Google

Fig. 18, which shows the arrangement of the harnesses for the second pick.

By comparing Fig. 15, which shows the chain draft when using bottom doups, with Fig. 19, which is the draft chain for top doups, it will be noticed that the harnesses that are lifted on any pick in Fig. 15 are lowered on that pick in Fig. 19, the lowering and raising of the harnesses being exactly opposite to each other. The lever of the slackener, however, is lifted on the same pick in both cases, it being necessary thus to relieve the yarn whenever the crossing of the ends takes place.

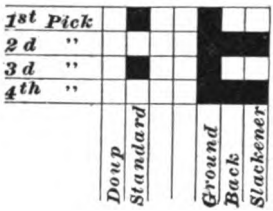

FIG. 19

SETTINGS

19. In all cases so far referred to, the references have been to harnesses operated by a single-lift dobby. It will not be out of place to make a few references to the timing and adjustment settings of the harnesses necessary to obtain good results when weaving a pure gauze fabric.

The lifting of every harness and also the slackener must be timed accurately in order that one may work in harmony with the other. The slackener must be lifted just high enough to let off the required amount of warp at the time of crossing and exactly on time with the standard and doup. The standard and doup must be kept well together in order to prevent the doup from doubling up into the warp, which is liable to result in the ends being broken in addition to producing bad shedding and rapidly wearing out the doups.

With bottom doups, the doups must be kept well down, a little below the eyes of the ordinary harnesses, while with the top doups, they should be a little higher than the eyes on the rest of the harnesses. When bottom doups are being used, they should not lift any higher than is absolutely necessary; otherwise, they will become entangled in the warp ends.

Digitized by Google

Care should be taken to have both the doup and standard harnesses level and so set that the loop will not be too tight nor too slack at the point where it passes through the heddle eyes on the standard harness.

If the harnesses are set so that the bottom doups lift higher than the standard when both are raised, the doups will be pulled through the eyes of the standard. On the other hand, if the harnesses are so set that the doup harness does not lift as high as the standard, there will be an undue strain on the doups, which will be very liable to result in their breaking.

Care should be taken that the slackener does not allow the doup ends to become looser than is necessary to prevent too great a strain being placed on the yarn.

LENO WEAVING ON DOUBLE-LIFT, OR OPEN-SHED, DOBBIES

20. In order that the ends of the warp may make a turn such as is required in weaving gauze, it is absolutely necessary that those ends that are to make the turn shall become level before the crossing takes place. When weaving gauze fabrics on a close-shed dobby, this of course does not need to be considered, since after each pick all the warp ends are brought level at the bottom shed. When, however, the cloth is to be woven on an open-shed dobby, this point becomes more important, since on this style of dobby only those ends are lowered from the top shed that are required to be at the bottom on the next pick, while only those ends are raised that were at the bottom and are required to form a part of the top shed on the next pick.

Thus, in weaving a pure gauze fabric on an open-shed dobby, there will be found this difficulty to overcome; namely, two sets of ends, one being at the top and the other at the bottom, which must be made to meet after each pick of filling is inserted and then resume their former positions. Moreover, this must be accomplished on a loom in which

Digitized by Google

only those ends are moved from the top and bottom sheds that are required to change their positions on that pick.

Formerly it was thought impossible to weave a pure gauze on an open-shed machine, and, in fact, the more complicated leno weaves will be found to weave better on a close-shed dobby; yet, during recent years, motions have been applied to the double-lift dobby by means of which very intricate patterns may be woven successfully on a loom with this kind of a shedding motion. In describing this mechanism, bottom doups will be understood as being used.

As previously stated, there are two sets of ends that must be dealt with when considering a gauze weave on an open-shed dobby, these being as follows: (1) The ends that are drawn through one of the back harnesses and known as the ground ends; these are the ends that are always under the filling. (2) The ends that are drawn through the doups and known as the doup ends; these are the ends that are always over the filling.

The manner in which these ends are operated on an open-shed dobby is to bring the ground ends from the bottom almost to the center of the shed and back again to the bottom while the doup ends are brought from the top to the center of the shed and back again to the top, this operation being performed in the same period of time that it takes an end to move from the bottom to the top shed or vice versa. With this arrangement, the crossing of the ends will take place when the ends are near the center of the shed instead of at the bottom as is the case in a single-lift dobby.

21. The Jumper.—Two mechanisms are applied to the double-lift dobby in order to accomplish this result, one of which operates the harness through which the ground ends are drawn, while the other operates the doup harness. The mechanism operating the ground harness is known as a **jumper.** Its object is to bring the ground ends from the bottom to the center of the shed, where the turn is made, and then to allow the harness again to resume its position at the bottom, this operation taking place in the same

Digitized by Google

length of time that it takes the dobby to form the shed. There are several motions that will accomplish this object,

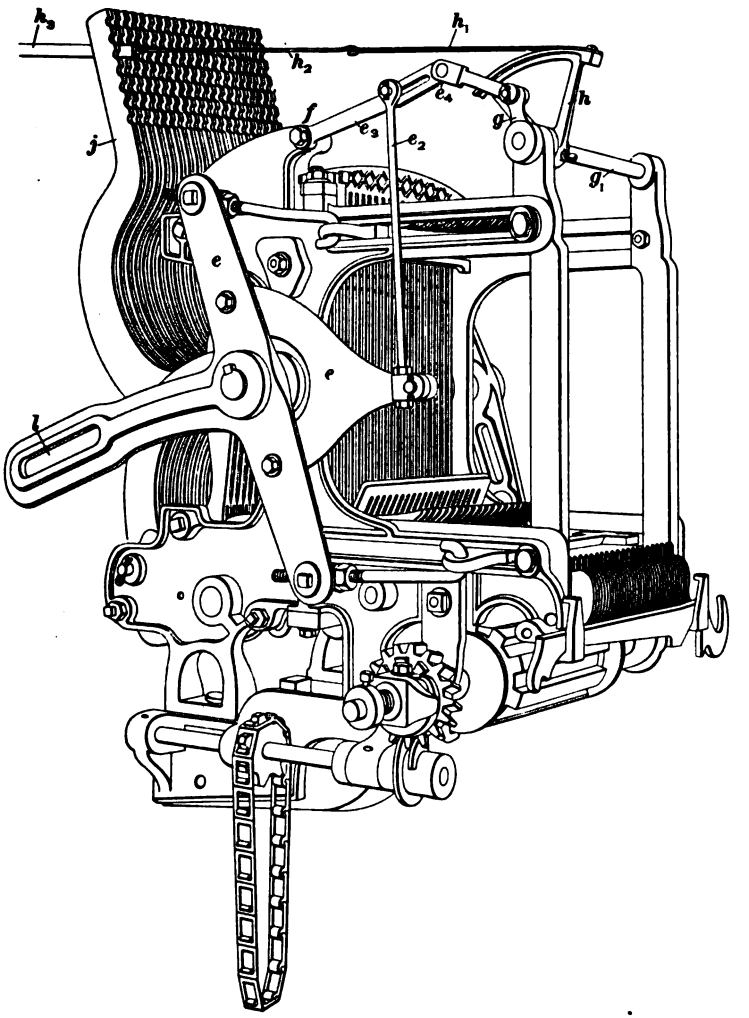

FIG. 20

one of which is described here. Fig. 20 is an illustration of a dobby with a jumper arrangement attached, while Fig. 21

Digitized by Google

shows the jumper, together with the dobby lever to which the ground harness is attached.

Referring to these figures, e is the dobby rocker, to which is attached an arm e_1. Connected to this arm is a rod e_2 that, at its other end, is connected to a togglejoint e_3 hinged at e_4. This togglejoint is connected to the frame of the dobby at f, while at its other end it is connected to an arm g attached

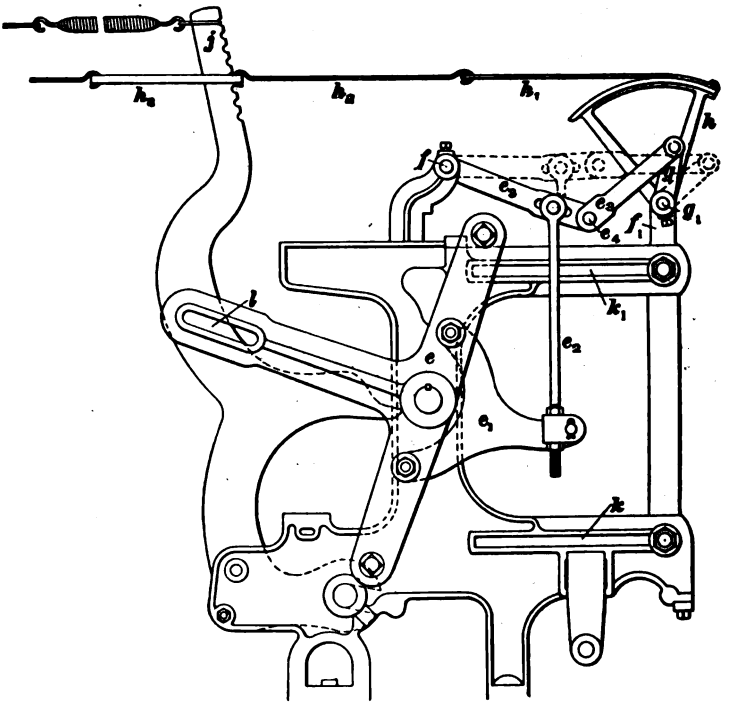

FIG. 21

to the shaft g_1. Fastened to this shaft, by means of a setscrew, is the segment h. Fastened to the top of the segment, by means of a screw, is a strap h_1 that is connected to a wire rod h_2 attached to a loop h_3, through which the dobby lever j passes. The loop must be at least half as long as the depth of the shed formed by the dobby, although it may be longer than this distance without in any way

Digitized by Google

interfering with its proper action. When gauze is being woven, the dobby lever does not act on the harness in any manner, but the segment, acting through the loop, performs the lifting of the harness, the slot in the loop allowing this to be done without interfering with the lever. Sometimes, as shown in Fig. 21, a spring is attached at one end to the dobby lever *j* and to the upper part of the loom framing at the other end by means of a cord or strap. This keeps the dobby lever in place when the jumper is in operation.

22. The action of the whole mechanism is as follows: Motion is given to the dobby rocker *e* by means of a connecting-rod, which connects with the rocker at the point *l*, this motion being such that the top arm of the rocker will be out on one pick, while at the next pick the bottom arm of the rocker assumes the outward position. Motion will be imparted to the arm e_1 in such a manner that it will move up and down, being up when the bottom knife is out and down when the top knife is out, the latter being the position shown in Fig. 21, while the former is the position shown in Fig. 20.

Starting with the position shown in Fig. 21, as the rocker is moved by the connecting-rod the arm e_1 will be moved up, thereby pushing up the rod e_2, which in turn will act on the togglejoint e_3. This action will push the arm *g* outwards, since *f* is fixed. As the arm *g* is pushed out it will turn the shaft g_1, which motion being imparted to the segment *h* will cause the harness to be lifted.

When the rocker *e* has reached a vertical position, the rod e_2, togglejoint e_3, and arm *g* will assume the positions shown by the dotted lines, thus pushing back the segment *h* so that the harness will be lifted half the space of the shed. As the rod e_2 continues to be lifted by the arm e_1 it will push e_2 still higher, but it should be noticed that after e_2 has passed the central position, as shown by the dotted lines, instead of pushing the segment *h* from the loom, it commences to bring it to its former position until the harness is again at its lowest position. This position is shown in Fig. 20.

Digitized by Google

Following the action of these different parts on the next pick, or while the top knife is moving out, the segment *h* will receive the same motion, although in this instance the rod *e*, is moving down instead of up. Consequently, the ends drawn through the harness worked by the jumper will be lifted to the center of the shed and then lowered while one knife is moving out and the other in. In this manner the desired half lift is obtained for the ground ends.

23. Weaving Plain Cloth.—Reference has previously been made to the fact that it is possible to weave plain cloth with a gauze arrangement on a single-lift dobby. It is also possible to weave plain cloth with doup and standard harnesses on a double-lift dobby.

Referring again to Fig. 21, the lever *j* is in close contact with the forward part of the loop h_3. If it is desired to give to the harness its full lift, as would be required in weaving plain, it is only necessary to insert a peg in the pattern chain, which will give to the lever its full lift; the lever in rising will come in contact with the loop, thus raising the harness to the top of the shed.

In weaving a pure gauze fabric, however, the lever *j* is left out of consideration entirely, since the jumper gives to the harness all the motion that is required to produce the weave.

24. The Yoke.—It is necessary next to consider the motion by means of which the doup end is brought from the top to the center of the shed to meet the ground end and then returned. When weaving a true gauze the doup harness is raised on one pick without the standard, and on the next pick the doup and standard harnesses are raised together. This point should be continually borne in mind when considering the device applied to the standard and doup harnesses of a double-lift dobby. Fig. 22 shows a view of this device, which is known as the **yoke**.

When weaving a true gauze fabric on a double-lift dobby, the standard harness is attached to the second lever of the dobby in the manner common to all regular harnesses. To the doup harness are attached the regular harness straps,

Digitized by Google

but these straps, instead of being attached to a loop that slips over the lever, are connected to a point u_3 on the yoke u, shown in Fig. 22. The hook u_1 of the yoke fits into a notch in the first lever of the dobby and the springs attached to the bottom of the harness keep it firmly in place.

To illustrate the action of the yoke, the position of the mechanism during two picks will be considered, the doup harness being raised without the standard on the first pick, while both the doup and the standard harnesses will be lifted on the second. On the first pick, the first lever of the dobby will be lifted, which, catching in the hook u_1, will raise the doup harness. On this pick the second lever will be down, and, consequently, the standard harness will be lowered. On the second pick the harness chain will be pegged to lower the first lever and raise the second. The action of the yoke

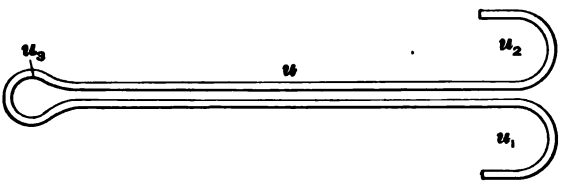

FIG. 22

during the lowering of the first harness and the lifting of the second should be carefully noted. As the first lever is dropping, the yoke and, consequently, the doup harness will drop with it, the springs on the bottom of the harness keeping the yoke firmly pressed against the dobby lever. When, however, the first lever reaches the central part of its drop it will pass the second lever, which is rising and bringing up the standard harness. At this point the second lever will catch in the hook u_3 of the yoke and thus carry the yoke back to the full lift of the lever, so that, although the first lever during this pick drops to its lowest point, the yoke and, consequently, the doup harness will only drop half way, when it is caught and carried back by the second lever. Thus, the doup harness, which was at the top, will drop half way, when it will meet and be carried back with the standard harness, which was down on the previous pick and is now being lifted.

Digitized by Google

This completes 2 picks of the weave, but, in order fully to understand the mechanism, its action for the next pick will be considered. The standard must be lowered on the next pick, while the doup harness must be dropped half the distance and then brought back again. In order to accomplish this, the pattern chain is pegged to raise the first lever and drop the second. The action of the levers for this pick will be found to be very similar to their action during the previous pick, with the exception that in this case it is the second lever that is dropping and the first rising. As the second lever is dropping, it will cause the standard and doup harnesses to be lowered, but when the second lever has reached a point that is half of its drop it will pass the first lever, which is rising. As these two levers pass each other, the first lever will catch in the hook u_1 of the yoke and thus carry the yoke, together with the doup harness, back to its full lift, while the standard harness is dropped to its lowest point. Thus, during the time that the standard harness is being carried from its lowest to its highest position, the doup harness is being lowered from the top to the center of the shed and then carried back again, and also while the standard harness is being lowered from its highest to its lowest position, the doup harness is being brought to the center of the shed and then raised again. In both these cases, the doup harness will occupy the same length of time in changing that is taken by the standard harness in changing from one position to another.

By the use of the jumper and yoke the necessary motions are given to both the ground and doup ends; that is, the ground end is brought from the bottom to the center of the shed, while the doup end is brought from the top to the center of the shed. The turning of the ends around each other is made while they are at this central position and then they are returned to their original positions; that is, the ground end goes to the bottom, while the doup end goes to the top of the shed.

Since this movement of the separate ends occupies the same length of time that is required in forming the regular

Digitized by Google

shed, it is possible to run a double-lift dobby with leno motion attached at as high a rate of speed as is possible without the leno motion, although when weaving leno patterns it is better to reduce the speed of the loom somewhat. As was stated previously, some leno patterns are better woven on a close-shed machine, but these are only the more intricate ones, and in most cases the double-lift dobby with the leno motions attached will answer all purposes. A double-lift dobby can be converted into a single-lift dobby, as far as its operation is concerned, by changing the gearing so as to drive the lifting knives twice as fast, and pegging the pattern chain for one knife only. The other knife, doing no work, is counterbalanced by a number of springs.

One disadvantage of the jumper is its positive action; that is, the harness to which the jumper is attached is forced to rise half the space of the shed and then be lowered on each pick. In the case of leno weaves where a turn of the ends is not required at each pick, this is an unnecessary motion and, consequently, will put more strain on the ends drawn through that harness than is absolutely necessary. Numerous inventions have been made to raise the jumper harness only when required, but as yet none have proved practical.

25. The Harness Chain.—It is necessary in this connection to consider the method of pegging the harness chain for a leno cloth that is to be woven on a double-lift dobby with leno attachments such as have just been described. As in previous examples, the chain illustrated will be one that will give a pure gauze weave; that is, a weave in which a turning of the ends takes place after each pick. In this case, as well as in former instances, the several points in connection with leno weaving should be carefully noted; that is, that on one pick the doup and back harnesses will be up, while on the next pick the doup and standard harnesses will be raised and the back harness will be down; also, that when the doup and standard are both raised, the slackener must let the ends loose. In this case an additional motion is brought into use, namely, the jumper, but since this motion is automatic, it

Digitized by Google

needs no attention when making a harness chain; the hooks that actuate the jumper harness are generally tied up in such a manner that there will be no liability of their being caught by the knives.

Fig. 23 shows a harness-chain draft that will give the weave previously described. Although the weave is complete on 2 picks, 4 picks, or two repeats, are given. Each harness and also each pick is marked so that the workings may be readily understood. On the first pick, the first lever and the lever actuating the harness through which the doup end is drawn at the back are raised, thus bringing up the doup end. On the next pick, the lever operating the standard harness, or the second lever, is raised while the first lever is lowered. This action of the levers will lower the doup harness half the space of the shed, when it will meet and be carried back with the standard harness. Thus, on this pick the doup and standard harnesses are raised while the back harness, through which the doup end is drawn, is lowered. The slackener lever is also raised on this pick, thus letting the doup ends loose.

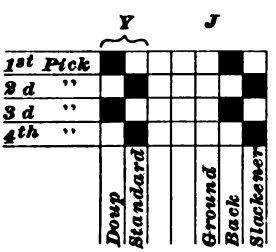

FIG. 23

On the third pick, which is a repetition of the first, the first lever is raised and also the lever that works the harness carrying the doup end at the back. On this pick, the first lever in rising meets the lever actuating the standard harness, which is dropping, at a point half the distance of their rise and fall, and, as the first lever is passing the second, it catches and carries back the yoke and consequently the doup harness. In the chain draft shown in Fig. 23, the spaces corresponding to the ground harness are left blank, since the harness lever has nothing to do with the raising or lowering of this harness. The reference letter *Y* shows that the doup and standard harnesses are to be connected by a yoke, while *J* indicates that the ground harness is to be operated by a jumper.

Digitized by Google

FIXING

26. When weaving gauze or leno fabrics, care should be taken in setting the different parts, as it is very essential in this class of work that all the separate motions are exactly adjusted and work in unison with one another.

27. Regulating the Shed.—The shed should be carefully regulated, since this governs, to a great extent, the quality of the product of the loom. When weaving lenos, as small a shed as possible should be used since considerable additional strain is put on the yarn due to the crossing of the ends, which takes place back of the reed. To further offset this strain, the slackener should be carefully set. In setting the slackener, see that the lever is lifted just high enough to allow the ends to receive the half turn without any additional strain. Care should be taken, however, that no more slack is let off than is absolutely necessary to relieve the ends. An important point to be noted in connection with the slackener is that it is not desired to relieve the doup ends until the crossing of the ends takes place, which occurs at the center of the shed; consequently, the harnesses can move half the space of the shed before it is necessary for the slackener to operate. If the strap that connects the dobby lever to the slackener were tight, the slackener would commence to lift as soon as the harnesses. To prevent this, the strap is made slightly longer than is required to extend from the dobby lever to the arm of the slackener, and any slack in the strap is taken up by the spring, as shown in Fig. 12. As the lever of the dobby commences to lift, the spring will be extended until the slack in the strap is taken up, when the arm of the slackener will be raised. This is so regulated that the slackener will not commence to move in until the dobby lever has moved through about half the distance it travels. When the slackener is not operating, the

Digitized by Google

rod d_1 rests on a bracket d_2, thus preventing the spring on the strap d_4 from being strained.

28. The Yoke.—The yoke should not be placed too high on the dobby levers, since this will result in the doup harness being lifted too high and putting additional strain on both the ends and doups. They should be lifted just high enough to form the shed and no more.

29. The Jumper.—The principal point to be considered when setting the jumper is to see that it does not lift the harness any higher than the center of the shed and, on the other hand, does not drop it any lower than the rest of the harnesses forming the bottom shed. In setting this motion, place the different parts in the position shown in Fig. 21; then the connecting-rod e_2 will be down and the segment h will be at its inner throw. When in this position, the connections with the ground harness should be tight and the outer end of the loop h_2 just touching the harness lever, as shown in Fig. 21. This may be regulated by loosening the setscrew that fastens the segment to the shaft g_1 and placing the segment in any desired position. When this has been set, turn the loom over until the connecting-rod e_2 is at its highest position and see that the loop h_2 in the strap is in the same position as when the connecting-rod e_2 was at its lowest position. If it should not be the same, it may be regulated by the nuts shown at the bottom of the connecting-rod.

As previously stated, when the connecting-rod is at its lowest position and also when at its highest, the harness is down; but when the connecting-rod is half way between these two points, the harness is raised half the space of the shed.

If the lift that the segment imparts to the harness is not sufficient to raise the harness to the center of the shed, it may be regulated by moving the connecting-rod in the slot where it is joined to the togglejoint e_3. By moving the connecting-rod toward the dobby levers, a greater lift is obtained, and by moving the rod toward the segment, a shorter lift results.

Digitized by Google

DIFFERENCE BETWEEN AMERICAN AND EUROPEAN METHODS

30. The method of drawing in the ends that has been described, and which is universally adopted in America, differs somewhat from that used in other countries. In order to avoid confusion, all the descriptions that have been given apply to one standard method, but in Germany and some other countries, the method in which the ends are drawn in when weaving lenos is to have the doup end drawn through the third harness before passing through the doup, while the ground end is drawn through the fourth harness.

This is exactly the reverse of the American method, in which the doup end is drawn through the back harness and the ground end through the third harness. With this method, however, the same result is obtained, the only difference being that in one case the doup end has a little larger space between the two harnesses through which it is drawn, and, since it is this end that stands the strain of the crossing, it would appear that the more space given to it, the easier would be its action.

By referring to Fig. 6 the slight difference that would exist should a be drawn through the third harness and a_1 through the fourth will be readily noticed. It will also be seen that this would not in any way interfere with the crossing of the ends, provided of course that these 2 back harnesses are operated in such a manner as to meet the needs of the ends drawn through them.

Digitized by Google

Digitized by Google

BOX MOTIONS

INTRODUCTION

1. When it is desired to weave a cloth in which it is necessary to place more than one kind of filling, some method of inserting the filling must be employed that differs very materially from that found on a loom that carries only one shuttle and contains but one box at each end of the lay. Looms constructed for this class of work are known as **box looms,** though in the cotton trade they are frequently called **gingham looms.**

The principle on which these looms are constructed is that of having at one or both ends of the loom a number of boxes, which are generally operated by levers and other suitable mechanism that will bring the bottom of the desired box in line with the race plate of the loom and thus allow the picker to act on the shuttle contained in that box. By this means, several shuttles, each containing a different kind or color of filling, can be operated, and the one to be used at any given time selected automatically.

Several attempts were made to adapt the power loom to the production of checked and other fabrics requiring more than one kind of filling before a successful motion was obtained. At the present time, however, all methods of operating the boxes on a box loom are based on one of two leading principles of governing shuttles; these are known as the **drop-box** and **revolving-box motions.** The drop box was invented and applied to the hand loom about 1760, while the revolving-box motion, as applied to power looms, was invented in 1843. Both of these motions are now found

For notice of copyright, see page immediately following the title page

Digitized by Google

in considerable variety of detail, but the revolving-box motion has not met with favor in the United States; in fact, it may be said that the drop-box motion is universally adopted in America. On this account this motion alone will be dealt with, and it should be understood that all mention of box looms refers to the drop box as applied to power looms.

In speaking of box looms, the number of boxes is designated by the number of boxes at each end of the lay with a multiplication sign between; thus, if a loom has four boxes on one end and one on the other, it is known as a 4×1 box loom; if it contains four boxes on each end, it is known as a 4×4 box loom. On looms weaving cotton goods, the drop boxes are generally placed only at one end of the loom. The number of shuttles that can be operated in a box loom is one less than the total number of boxes; thus, six is the largest number of shuttles that can be run in a 6×1 loom; four in a 4×1 loom; two in a 2×1 loom; etc. The statements made in the following pages should be accepted as referring to a 4×1 drop-box loom.

CROMPTON 4×1 BOX MOTION

CONSTRUCTION AND OPERATION

2. Connection of Picker Stick at Box End.—Fig. 1 shows one side of a Crompton loom with the box mechanism for a 4×1 box motion. The boxes *a* are arranged directly over one another, and are so connected to the end of the lay that they may be readily moved up or down without offering much resistance to the motive power of the loom. As the boxes receive an up-and-down motion while the picker receives a horizontal motion, some means must be provided by which the picker may be brought out of contact with the boxes during the time that the latter are being lifted or lowered. This is provided for by having a recess at this end of the lay, in which the picker rests during the time that it is not acting on the shuttle. The picker used at this end of the loom differs considerably from the ordinary

Digitized by Google

Digitized by Google

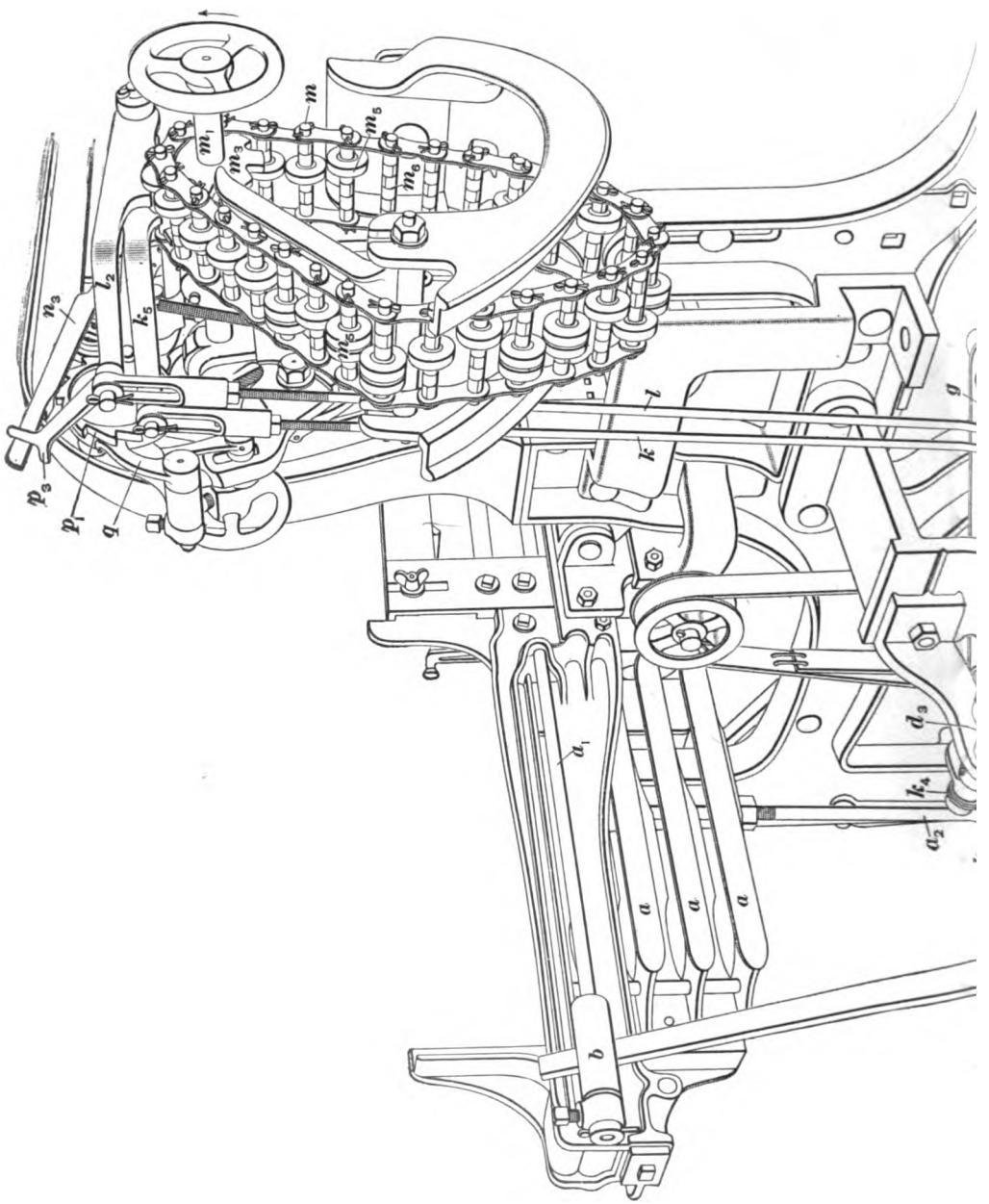

Digitized by Google

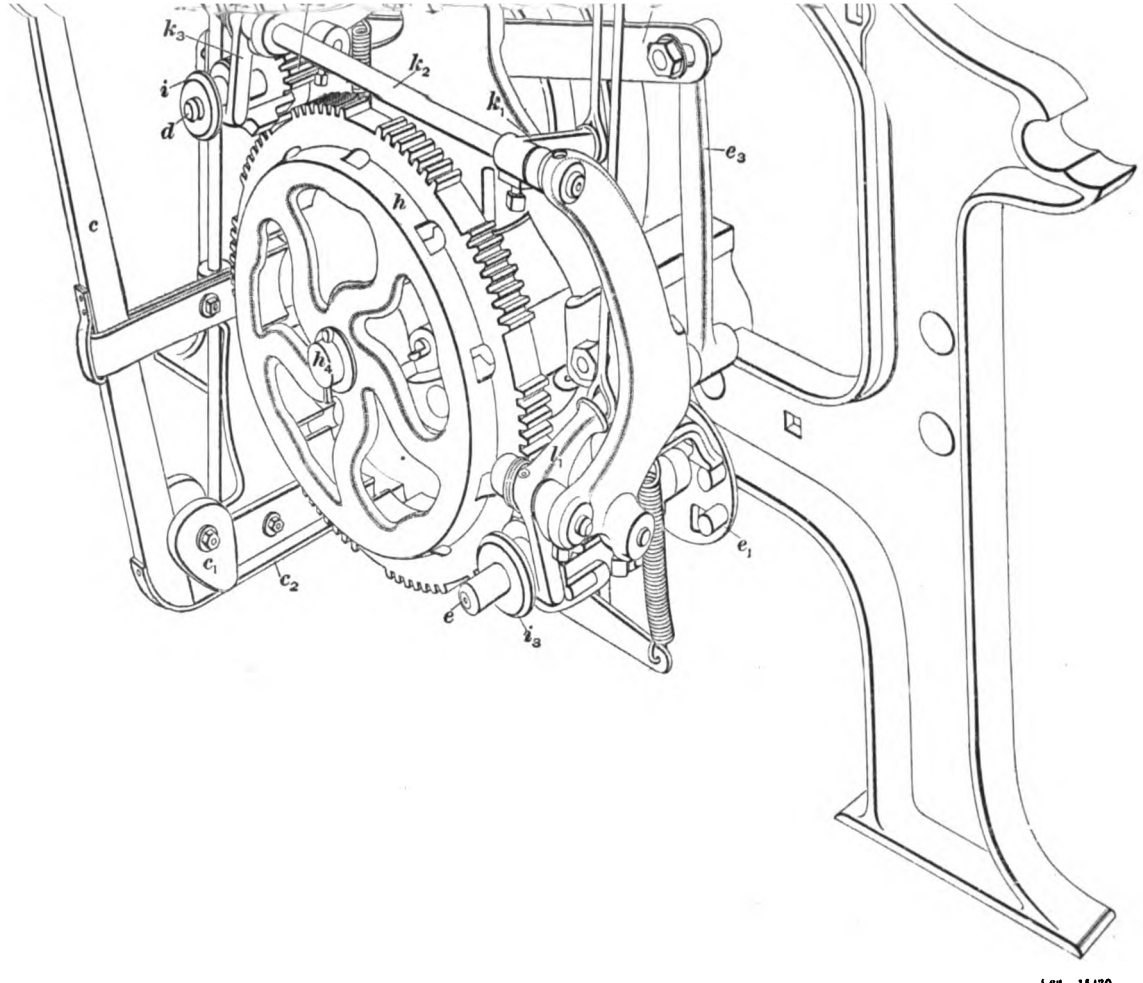

FIG. 2

§ 62 15430

Digitized by Google

Digitized by Google

picker and is shown at b, Fig. 1, and also in Fig. 2. The rod a_1 passes through the hole b_1 and serves as a support for this end of the picker, in addition to being a guide for the picker during its picking action. The other end of the picker passes through a slot that is provided at the back of each box. The picker stick c, Fig. 1, passes through the slot b_2, Fig. 2, of the picker, and is not connected to the picker in any other manner; it throws the picker forwards when picking the shuttle from this side of the loom. As the picker stick is not attached to the picker, any slightly higher elevation that the picker stick may assume in moving from one end of the box to the other will not in any way affect the picker; consequently, there is no necessity of adopting a parallel motion, the picker stick having simply a slight recess near its lower end that bears against a stud supported by the bracket c_1. The picker stick is held against the stud by means of the strap c_2, which at its other end is connected to a spring.

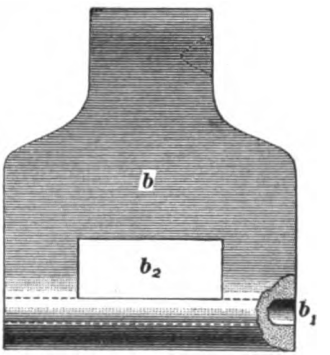

FIG. 2

3. Lifting Lever.—With a motion such as is shown in Fig. 1, if it is desired to use four colors of filling, four shuttles, each containing a different color, are placed in the boxes a. It is the object of the mechanism shown in this figure to bring the bottom of any one of the boxes level with the race plate of the loom, in order that the picker may act on the shuttle contained in that box. The boxes are raised and lowered by means of the lifting rod a_2, which is attached to the lower part of the bottom box. In designating the different boxes on a box loom the top box is spoken of as the first box; the next, as the second box; the next, as the third; and so on, the bottom box, where there are four boxes, being known as the fourth box.

Digitized by Google

The parts from which the rod a_3 receives its motion are more clearly shown in Fig. 3, which illustrates the different parts of the motion as they appear when looked at from the inner side. At its lower end, the lifting rod carries the stud a_2, to which is pivoted an arm f, connected to the upper end of which is another arm f_1, the two arms f, f_1 being held together by a spring f_2. Referring again to Fig. 1, there will be noticed the ends of two shafts d, e, known, respectively, as the front and back shafts of the box motion. Attached to the inner end of the back shaft, as shown in Fig. 3, is a circular flat disk e_1 that carries a crank e_2. Connected to this crank is a crank-arm e_3 that is pivoted at its other end to a stud attached to the lever g. On the inner end of the front shaft d is also a circular plate d_1. This plate carries an eccentric d_2, on which works a collar g_1 that is a part of the lever g. At the point where the two arms f, f_1 are held in contact by the spring f_2, they are slightly hollowed out, thus forming a slot in which a stud g_2 that is carried by the lever g is held.

When it is desired to raise or lower the boxes, one or both of the shafts of the box motion are given a half revolution. From Fig. 3 it will be noticed that if the parts connected to the front shaft d are in the position shown in this figure and the shaft is given a half revolution, the eccentric d_2 will raise the collar g_1, which will also raise the lever g at this point and result in the forward end of this lever assuming a higher position. On the other hand, if the parts connected to the back shaft e are in the position shown in Fig. 3 and this shaft is given a half revolution, the crank e_2 will lower the crank-arm e_3, which will result in the back end of the lever g being dropped and its front end raised. As the front end of the lever g is raised, it will also raise the lifting rod a_3 by means of the connections formed by the stud g_2 and arms f, f_1.

4. Method of Raising and Lowering the Boxes. The amount of lift that is given to the boxes by means of the eccentric and crank arrangements will be seen from the

Digitized by Google

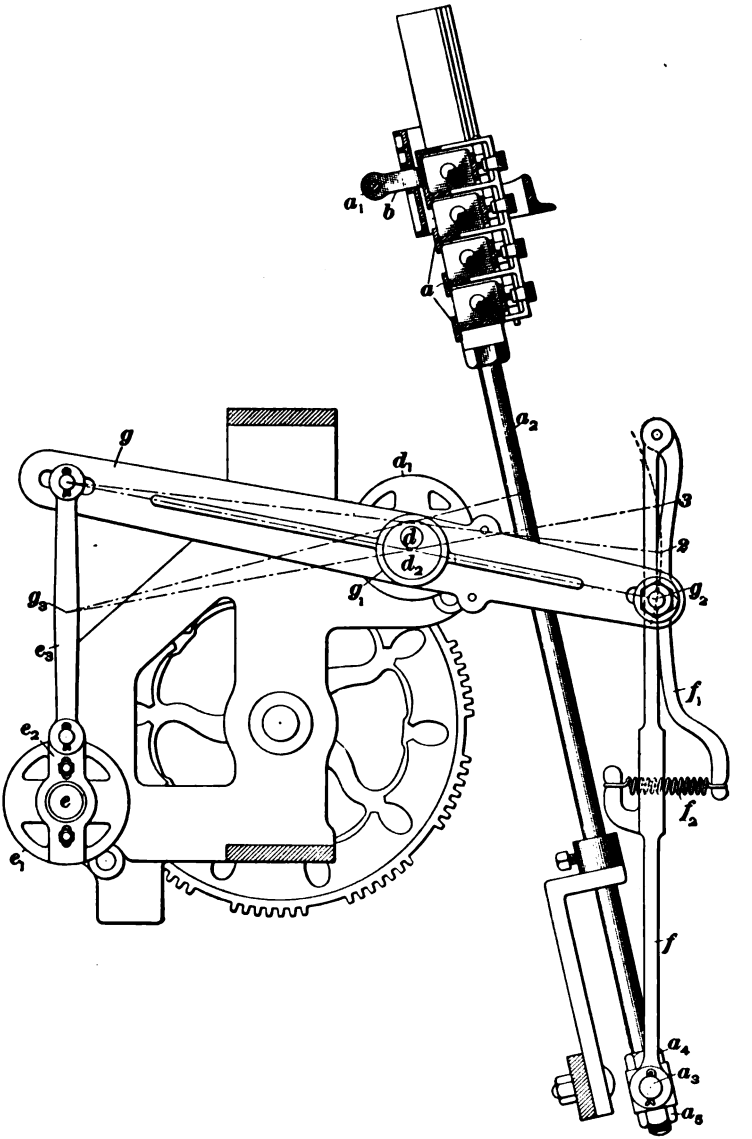

FIG. 3

Digitized by Google

following: The boxes as shown in Fig. 3 are in the position that they assume when the first, or top, box is level with the race plate. If, when the boxes are in this position, it is desired to raise the lifting rod a_2, and consequently the boxes a, so that the picker will act on the shuttle carried by the second box, the front shaft of the box motion will be given a half revolution, causing the eccentric on this shaft to raise the collar g_1 and consequently the lever g at its forward end. As no motion is given to the crank-arrangement at the back end of the lever g, the forward end of the lever will be brought up to the point *2*, Fig. 3, this lift being sufficient to bring the bottom of the second box level with the bottom of the race plate. When it is desired to bring the third box into position the eccentric arrangement of the front shaft d remains in the position shown in Fig. 3, while the back shaft e is given a half revolution, causing the crank-arrangement to lower the back end of the lever g to the point g_3, and the front end of the lever to be raised to the point *3*, which lift is sufficient to bring the bottom of the third box level with the race plate. If the different parts of the box motion are in the position shown in Fig. 3 and it is desired to bring the fourth box into position for the picker to act on the shuttle contained by that box, both the front and back shafts will be given a half revolution, which will result in the eccentric on the front shaft raising the lever g at this point, while the crank-arrangement on the back shaft will drop the back end of the lever g to the point g_3. This action of the two shafts will result in the forward end of the lever g being raised to the point *4*, which lift will be sufficient to bring the bottom of the fourth box level with the race plate.

5. In dropping the boxes, the motion given to the lever g will, of course, be opposite to that described for raising them, the motion being positive in both directions. However, in studying this mechanism, it should be understood that many different combinations of raising and lowering the boxes may be met with. For example, suppose that the

Digitized by Google

bottom of the second box is in line with the race plate and it is desired to raise the boxes until the third box is in position. As previously stated, when the second box is in position, the eccentric d_2 on the front shaft is in its highest position, while the crank-arrangement on the back shaft is in the position shown in Fig. 3; consequently, if it is desired to bring the third box into position, it will be necessary to give both shafts a half revolution, resulting in the eccentric assuming the position shown in Fig. 3, while the crank-arrangement will be dropped, bringing the back end of the lever g to the point g_2.

With this method of raising and lowering the boxes, any box may be brought into position at any time no matter which box was previously in position, although it is found in operating a loom that the best results are obtained by not giving the boxes a greater lift than the space occupied by one box; that is, if the first box is in position it is better to raise from the first to the second rather than from the first to the third, since in the former case not so great a strain is brought on the different mechanisms as in the latter case.

6. Connection Between the Lifting Rod and Lever.—Certain special points in regard to the manner of forming the connection between the lifting rod a_2 and the lever g should receive careful attention. By referring to Fig. 3 it will be noticed that since the lifting rod a_2 is connected to the bottom of the boxes, this rod will necessarily have a backward-and-forward movement imparted to it by the motion of the lay, while on the other hand the forward end of the lever g receives an up-and-down motion; for this reason it is impossible to make any rigid connection between these two parts. However, by connecting the arm f to the lower end of the lifting rod and having the lever g operate the arm f this difficulty is overcome.

The method of connecting the parts f, f_1 with the lever g provides a safety device in case any obstruction prevents the boxes from moving freely. When operating the boxes in a box loom it occasionally happens that a shuttle or the picker

Digitized by Google

becomes caught in the boxes, thus preventing the boxes from rising or falling. If under these circumstances the lever g is operated, the stud g_3 is forced out of the retaining slot formed by the arms f, f_1, the spring f_2 being extended sufficiently to allow this to be done without breaking any of the parts. It will readily be seen that under these conditions the lifting rod a_3 will not be moved. After the obstruction has been removed, in order to bring the parts into their proper position, it is simply necessary to extend the spring f_2 and raise or lower the arms f, f_1 until the stud g_3 slips into its retaining slot.

7. Star Gear.—It is next necessary to consider the method adopted to give the half revolution to the back and front shafts of the box motion. It should first, however, be understood that the motion of these shafts should be intermittent, since otherwise the boxes would constantly be changing. The motion of the front and back shafts is derived primarily from gear h, Fig. 1, which is known as the **star gear.** This gear is placed on a short shaft, or stud, h_4, and is driven by a cam on the end of the cam-shaft of the loom. This is somewhat more clearly shown in Fig. 4, which illustrates the different parts of the motion with the arms of the star gear removed, in order that the inner rim of this gear may be seen. As shown in this illustration, the outside face of this star gear consists of sections of 7 teeth each, blank spaces remaining between these sections. The inner rim of the star gear contains cut-outs h_1, with which the stud h_3 of the cam h_2 engages; consequently, as the cam-shaft revolves, the stud h_3 engaging with the cut-outs h_1 will turn the star gear until, through the revolution of the cam-shaft, the stud is brought out of contact with the star gear. In connection with this motion there are two points that should be carefully noted: (1) The stud h_3, at each revolution of the cam-shaft moves the star gear a distance that is equal to the space between the centers of two consecutive blanks on the outer rim of this gear. (2) Since the cam-shaft revolves only once every 2 picks, the star gear will be moved only once in that time; and during the time that the stud is not

Digitized by Google

engaging with a cut-out, the star gear is held stationary by the concentric portion of the cam h_4 being engaged with the part of the star gear between two cut-outs.

8. Operation of Front and Back Shafts.—Keyed to each of the shafts d, e, as shown in Fig. 4, is a gear—d_4 on the front shaft and e_4 on the back shaft. Since both are alike and work in exactly the same manner, a description of

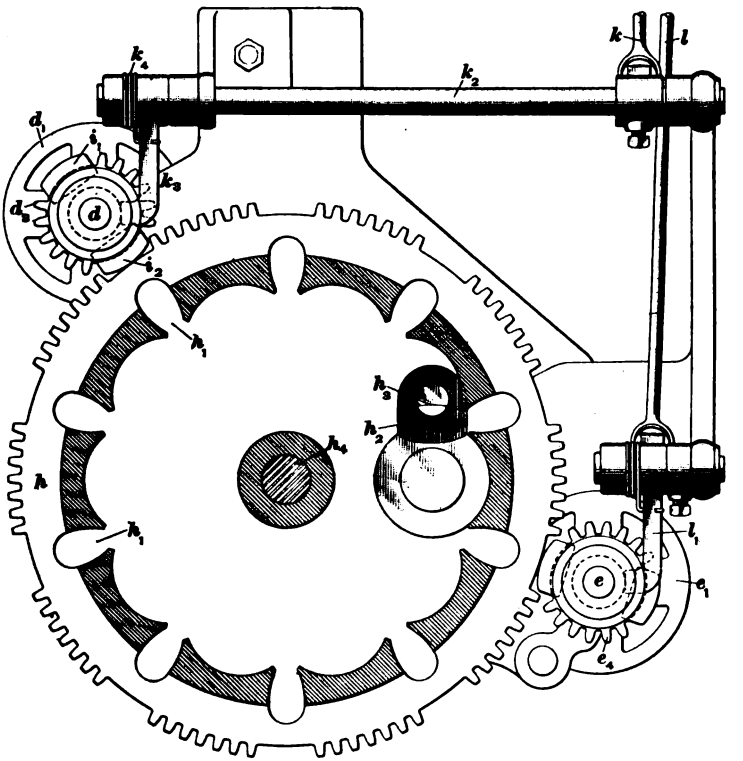

FIG. 4

one will serve to illustrate the action of both. Referring to Fig. 5, which shows the operation of these parts somewhat more clearly and shows the star gear, together with the front shaft d, it will be seen that this shaft carries a collar i that slides loosely on the shaft and carries 2 projections i_1, i_2.

Digitized by Google

These projections extend into cut-outs on the outer rim of the gear d_2, which contains alternate sections of teeth and blanks; there are two blanks and two sections of teeth,

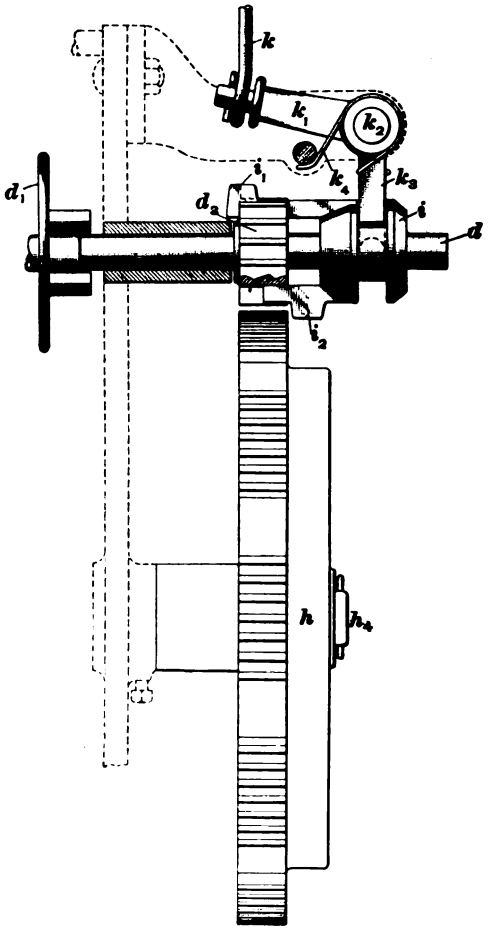

FIG. 5

each section containing 6 teeth. It will be noticed that the projections i_1, i_2 are sufficiently high to engage with the teeth of the star gear, provided that they are brought into the proper position. Assuming that the different parts are

Digitized by Google

in the position shown in Fig. 5, then any motion of the star gear h will not be imparted to the gear d_3, since one of the blanks on this latter gear is being presented to the star gear and the high portion on the projection i_3 is not in such a position that the star gear will engage with it. If, however, any force acts on the collar i to move it toward the gear d_3, the high portion on the projection i_3 will engage with the star gear, and since this projection slides in one of the cut-outs in the gear d_3, the gear will be turned sufficiently to allow its teeth to engage with the teeth of the star gear. This action will result in the gear d_3 receiving a half revolution, when the blank filled by the projection i_1 will be presented to the star gear; and in case the collar i is not

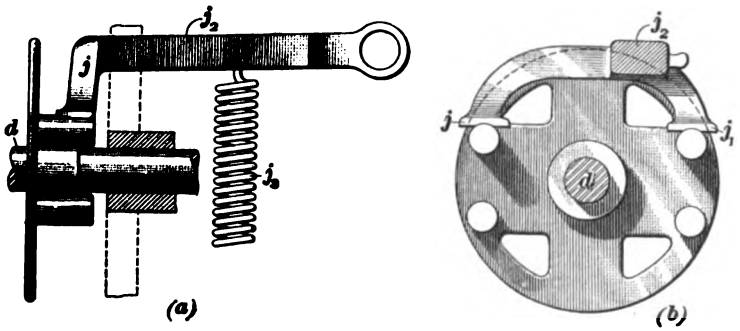

FIG. 6

moved back after the projection i_3 has engaged with the star gear, any further motion of the star gear will not be imparted to d_3, since the high portion of the projection i_1 will not come in the path of the teeth on the star gear. It should be noted in this connection that the construction of the projections i_1, i_3 is such that only one projection can be in the path of the teeth on the star gear at one time.

After the star gear has engaged with and turned the gear d_3 for half a revolution, the opposite blank on this latter gear is presented to the star gear; and in order that the gear d_3 may always assume its correct position there are on each of the inner plates of the front and back shafts of the box motion four studs, as shown in Fig. 6, (a)

Digitized by Google

being a side view and (*b*) a front view, both partly in section. These studs are so placed that two fingers j, j_1 will rest squarely on two of the studs when the shaft d is in the correct position to present a blank on the face of the gear d_3 to the star gear. The fingers j, j_1 are carried by an arm j_2 that is connected, at its other end, to the framework of the loom and carries a strong spring j_3 that is constantly tending to force the fingers j, j_1 on the studs carried by the plates.

9. Considering next the manner in which the sliding collars are operated, in order to throw the gears d_3, e_4, Fig. 4, in and out of connection with the star gear, there will be noticed in Fig. 1 two rods k, l that extend from the upper part of the box motion to the lower part. Dealing first with the rod k, it will be noticed that at its lower end this rod is connected to an arm k_1 that is setscrewed to the short shaft k_2. This shaft is free to move in its bearing and has setscrewed at its other end a lever k_3, the lower end of which projects into the collar i. These different parts are more clearly shown in Fig. 5; in this figure, a spring k_4 is shown attached to the lever k_3. The action of this spring tends to force the lever k_3 outwards at all times. It will thus be seen that if any force acts on the rod k to raise it, the shaft k_2 will be turned in its bearings; this action will throw the lower end of the lever k_3 in toward the loom, which will result in the sliding collar i being pushed in, causing the projection i_2 to engage with the star gear and thus turn the gear d_3 sufficiently to allow its teeth to engage with one of the sections of teeth on the rim of the star gear. As the gear d_3 is given a half revolution its opposite cut-out will be presented to the star gear, but since the collar i is in, the projection i_1 will not be in a position to engage with the star gear. Should, however, the force that lifted the rod k be taken away, the spring k_4 will push the arm k_3 outwards, together with the collar i, allowing the projection i_1 to engage with the star gear and the gear d_3 to be given another half revolution.

Digitized by Google

The action of the rod l is similar to that of the rod k, with the exception that this rod is connected directly with the lever l_1, Figs. 1 and 4, without the intervention of the short shaft noted in connection with the rod k.

BOX-CHAIN MECHANISM

10. The upper ends of the rods k, l are connected to levers k_3, l_3, respectively, as shown in Fig. 1, which are fulcrumed on a stud fastened to the framework of the loom. These levers are operated by means of the box chain m, Fig. 1. This chain consists of risers m_3 and sinkers m_4, also sometimes known as rollers and washers, respectively. These risers and sinkers are placed on spindles and the spindles fastened together by links, the whole forming the box chain. A somewhat better idea of the construction of a box chain may be obtained by referring to Fig. 10. The washer, or sinker, m_4 is a short tube of metal of sufficient diameter to slide over the spindle, its principal object being to hold the rollers in their correct positions. The rollers m_3 are considerably larger in diameter and have at their center a hole sufficiently large to allow the spindle to pass through. After such a chain is built it is passed around the chain barrel m_2, which is fast to the chain-barrel shaft m_1, and the ends of the chain connected together. The chain barrel m_2 is operated by the pawl n_2, Fig. 8, which engages with the ratchet m_2 on the chain-barrel shaft. The pawl n_2 is connected to the lever n, which receives its motion from the rod n_1, which is operated by a cam on the cam-shaft of the loom. The chain-barrel shaft m_1 also carries another ratchet gear, in which works a stop-pawl that holds the chain barrel in the correct position to bring a bar of the box chain directly under the levers k_3, l_3, Fig. 1, after the chain-barrel shaft has been turned by the pawl n_2, Fig. 8. In connection with this motion, it should be noted that since the pawl n_2 derives its motion primarily from the cam on the cam-shaft of the loom, it will turn the ratchet gear m_2 1 tooth during every 2 picks of the loom; consequently,

Digitized by Google

one bar on the box chain serves for 2 picks. It is necessary to have the speed of the box chain bear this relation to the speed of the loom, since the shuttle must travel from the box end to the opposite end and back again before the boxes can change.

OPERATION OF THE BOX MOTION AS A WHOLE

11. The different motions that have been described constitute all the principal mechanisms found on this box motion, and its action as a whole is as follows: When the motion is in its normal position, that is, with the first box in position to have its shuttle acted on by the picker, all the parts will assume the positions shown in Figs. 1 and 3. In case it is desired to raise the second box into position, a riser, or roller, that will operate the lever k_4 is placed on the bar of the box chain that will be forced under the lever during the 2 picks that it is desired to have the second box operate. On the same bar, sinkers, or washers, are placed so as to allow the lever l_4 to remain down. Raising the rod k_4 by means of a roller on the box chain causes the gear d_2 to engage with the star gear, thus giving the front shaft d a half revolution. This half revolution of the front shaft causes the eccentric d_3, Fig. 3, to assume its highest position, thus raising the forward end of the lever g sufficiently to lift the bottom of the second box on a level with the race plate.

If the first box is in position and it is desired to lift to the third box, a roller is placed on the box chain to operate the lever l_3, Fig 4, while that part of the bar of the box chain on which the lever k_4 rests will contain sinkers, allowing this lever to drop. The lifting of the lever l_4 by the roller on the box chain raises the rod l, which throws the collar i_4 in toward the loom and allows the gear e_4, Fig. 4, to engage with the star gear, thus giving the back shaft e a half revolution. This half revolution of the back shaft causes the rod e_3, Fig. 3, to be lowered, dropping the back end of the lever g and raising its forward end sufficiently to bring the bottom of the third box on a level with the race plate.

Digitized by Google

If the first box is in position and it is desired to raise to the fourth box, rollers are placed on the box chain to raise both the levers k_3, l_3, Fig. 1, thus lifting the rods k, l, throwing both gears d_3, e_4, Fig. 4, into connection with the star gear and giving a half revolution to both the back and front shafts of the box motion. Revolving both shafts causes the eccentric d_3, Fig. 3, to assume its highest position, while the crank e_3 assumes its lowest position, thus giving a full lift to the forward end of the lever g and raising the bottom of the fourth box to a level with the race plate.

MULTIPLIER MOTION

12. Construction.—In the mechanism so far described one bar of the box chain serves for only 2 picks of the loom; consequently, if the pattern being woven contains a large

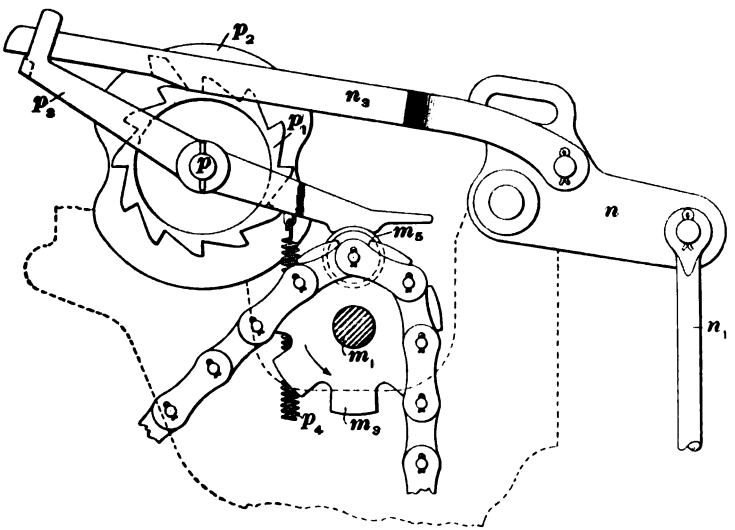

FIG. 7

number of picks of each color, it will be necessary to build a very long box chain. To overcome this difficulty, a mechanism known as the **multiplier motion** is applied to most box looms. By means of this motion, the box-chain

Digitized by Google

bar that controls the box containing the required color will not have to be built for every 2 picks, since it will be possible to build any bar in such a manner that in addition to raising the required box it will also set in operation mechanism that will prevent the pawl n_3, Fig. 8, from operating on the ratchet m_1 and thus allow the box chain to remain in the one position until the required number of picks of that color or kind have been placed in the cloth.

Certain parts of this mechanism are shown in Fig. 1, but more detailed views of these parts are given in Figs. 7 and 8,

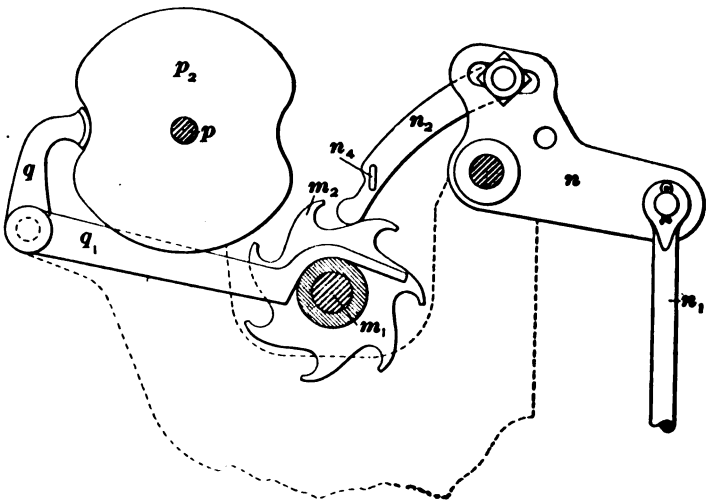

FIG. 8

which show the motion as looked at from the same point, but in each figure certain parts are removed in order to show more clearly the other parts. Referring first to Fig. 7, there will be noticed attached to the lever n that carries the pawl for driving the ratchet of the chain barrel another pawl n_3, which engages with a ratchet p_1 that is on the stud p. The ratchet p_1 forms a part of the cam p_2, which contains two cut-outs, as shown. The action of the pawl n_3 on the ratchet p_1 is controlled by a lever p_3, one end of which is in contact with the pawl, while the other end rests on the box chain and

Digitized by Google

is held in this position by a spring p_4. In case it is desired to have the pawl n_2 out of contact with the teeth of the ratchet, that part of the bar of the box chain that comes in contact with the lower end of the lever p_3 contains a washer, allowing the spring p_4 to depress this end as far as possible, raising the other end, which is in contact with the pawl n_2, and lifting it out of contact with the teeth of the ratchet. When, however, it is desired to have the pawl engage with the teeth of the ratchet, a half roller, so-called because it projects over the links of the box chain on the upper side of the chain, is placed on the bar of the box chain, which will raise the lever p_3 at its lower end, depressing the end that is in contact with the pawl n_2, and allowing the pawl to engage with the teeth of the ratchet p_1. An important point to be noted in this connection is that since the pawl n_2 that works the ratchet p_1 receives its motion from the lever n, it must necessarily move the ratchet p_1 1 tooth every 2 picks of the loom.

Referring to Fig. 8, there will be noted working on the outer rim of the cam p_2 a finger q. Setscrewed to the same stud is another finger q_1, the inner end of which rests on the chain-barrel shaft. When the finger q rests on that part of the rim of the cam that is cut out, which is the position shown in Fig. 8, the finger q_1 will be down, as shown in this figure. As the cam is turned by the action of the pawl n_2 on the ratchet p_1, it will force the finger q outwards, turning the stud to which it is setscrewed and thus raising the inner end of the finger q_1. As the inner end of this finger is raised, it will come in contact with the pin n_4 on the pawl n_2 and thus lift the pawl out of contact with the teeth of the ratchet m_2.

13. Operation.—The action of this mechanism is as follows: Suppose that it is desired to place a large number of picks of some one color, say red, in the cloth consecutively and that the red is carried by the shuttle that is in the first box. A bar of the box chain containing washers at the point where the levers and the bar are in contact will be brought under the levers; there will also be placed on the

Digitized by Google

end of this same bar of the box chain a half roller, which will raise the end of the lever p_3 with which it comes in contact, causing it to assume the position shown in Fig. 7 and allowing the pawl n_3 to engage with the ratchet gear p_1. As the ratchet gear is turned, the cam p_2 will also be turned, forcing the finger q, Fig. 8, from the cut-out to the extreme edge of the cam. This action will raise that end of the finger q_1 that is in contact with the chain-barrel shaft, causing it to lift the pawl n_3 out of contact with the ratchet m_3 and thus stop the box chain from turning. As the cam p_2, Fig. 7, continues to revolve through the action of the pawl n_3 on the ratchet gear p_1, the lever q, Fig. 8, will drop into the opposite cut-out on the rim of the cam, allowing the pawl n_3 again to engage with the ratchet m_3 and to turn the box chain until the next bar is brought under the levers k_3, l_3, Fig. 1. If this bar also contains a half roller, the different parts of the motion will be placed again in the same position they assumed when the previous bar was operating. On the other hand, if there is no half roller on this bar, the lever p_3, Fig. 7, will be pulled down by the spring p_4, raising the pawl n_3 out of contact with the ratchet gear p_1; the finger q, Fig. 8, will remain in the cut-out of the cam p_2 and allow the pawl n_3 to turn the chain barrel until a bar is brought under the levers containing a half roller, which will raise the lever p_3, Fig. 7.

By referring to Fig. 7, it will be noticed that the ratchet p_1 contains 12 teeth, and as the pawl n_3 while engaging with this ratchet moves it 1 tooth during every 2 picks of the loom, and since one bar of the box chain can cause the cam p_2 to make only half a revolution, then one bar of the box chain that is built to operate the multiplier motion will serve for 12 picks; that is, if a half roller is placed on a bar of the box chain, the shuttle that is brought into operation by that bar will run for 12 picks before a change is made.

The multiplier motion that has been described is known as the *12-pick multiplier*. It is, however, possible to have the motion control a different number of picks by means of having a different number of cut-outs on the cam, or by changing the number of teeth in the ratchet.

Digitized by Google

METHOD OF BUILDING BOX CHAINS

14. An illustration is given here showing the building of a complete chain when using a 12-pick multiplier, the filling being inserted as follows: 24 picks blue, 24 picks white, 12 picks red, 12 picks yellow, 12 picks red, 12 picks white, 12 picks blue, 4 picks white, 4 picks blue, 4 picks white, 4 picks blue, 4 picks white, 12 picks blue, 12 picks white, 12 picks red, 12 picks yellow, 12 picks red, 24 picks white, giving a total of 212 picks in one repeat of the chain.

Box chains are built from pattern drafts, which show the number of picks of each color in one repeat and the order in which they are placed in the cloth. A box-chain draft for the colors arranged as stated above is shown in Fig. 9. With this draft as a guide, it is necessary to build the box

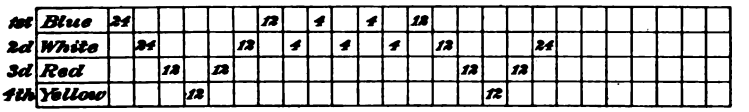

FIG. 9

chain in such a manner that the exact number of picks of each color shown in the draft will be placed in the cloth in their proper order. One other point that should be noted is that in many cases the colors are so arranged that it is a difficult matter so to build the chain that serious jumps in the boxes will be avoided, for while it is possible to raise the boxes from the first to the fourth or to lower them from the fourth to the first, this should be avoided as much as possible; consequently, when building a box chain care should always be taken to place the different colors in the different boxes in such a manner that the least possible number of jumps will be necessary. A jump occurs when the boxes are moved through a greater space than is occupied by one box. By referring to Fig. 9, it will be noticed that by placing blue in the first box, white in the second, red in the third, and yellow in the fourth, the boxes will be lifted in regular

Digitized by Google

order and no jumps will occur; whereas, if the red is placed in the second box and the white in the third, it will be necessary to jump the boxes in many cases.

Fig. 10 shows five bars of a filling chain, each bar showing a different arrangement of rollers and washers; the first, or top, bar contains the multiplier roll. It will be seen that, with the exception of this roll, the bar consists of washers; consequently, a bar built in this manner will give 12 picks of the first box. The next bar contains washers only and, as a result, the first box will be on a line with the race plate. The next bar contains a roll that will raise the lever k_3, Fig. 1, of the box motion and, as explained, this will raise the second box. The next bar contains a roll that will raise the lever l_3, Fig. 1, of the box motion and will result in the third box being brought into position. The bottom bar is built to give the fourth box.

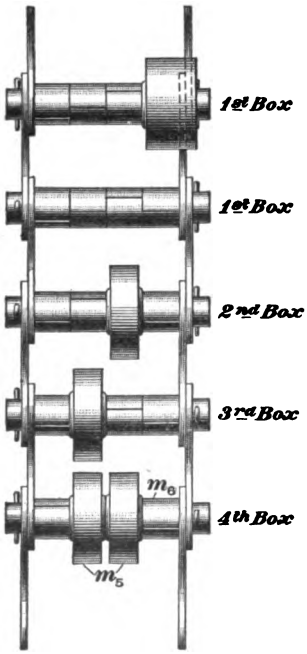

FIG. 10

When building a box chain for a loom, the side on which the box mechanism is placed should be carefully noted and the chain built in such a manner that the rollers and washers will come under their correct levers. In placing a box chain on the loom, the first bar is placed on the chain barrel at the back and the barrel turned by hand in the same direction that it moves when operating. Comparing Fig. 10 with Fig. 1, it will be seen that if the first, or top, bar is placed on the barrel m_3 in the manner described and the hand wheel turned in the direction of the arrow, the levers will be operated in the manner indicated.

Digitized by Google

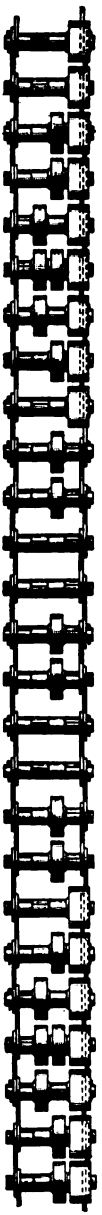

FIG. 11

15. Fig. 11 shows the complete chain built according to the chain draft. The first color called for in the draft is 24 picks of blue, which color is in the first box. To obtain these 24 picks of blue the first two bars of the chain, reading from the top, are built to give the first box and on the end of each bar is placed a multiplier roll. Since each bar containing a multiplier roll will give 12 picks, these first two bars of the chain will give 24 picks of the first box. The next color in the draft is 24 picks of white, which is in the second box. The next two bars are built in the same manner as the first two, with the exception that there is placed on each a roll that will raise the inside lever of the box motion and thus give the second box. By comparing each bar of the box chain with the filling draft it will be seen that the desired result will be given. However, it should be noted that when it is necessary to place only 4 picks of a color in the cloth, the multiplier cannot be used. In this case, two bars are built to give the desired box and, since each bar operates for 2 picks, the desired 4 picks will be given.

In case it is necessary to place a certain number of picks of one color in the cloth, this number being greater than 12 and yet not a multiple of 12, as many bars as possible will be built with multipliers and then the desired number will be completed by building a sufficient number of bars without multipliers. For example, suppose it is desired to place 30 picks of one color in the cloth; two bars containing multipliers will be built, which will give 24 of the required picks, and in addition to these, three bars without multipliers will be built, which will give 6 more picks of the same color, thus completing the 30 picks.

Digitized by Google

STILL BOX MOTION

16. On most looms it will be found that when the filling runs out, the loom will continue to run for 2 or 3 picks before being completely stopped by the filling stop-motion. On plain work this is generally of little or no consequence. When, however, it occurs on a box loom, if some method is not adopted to stop the operation of the box motion the exact pattern of the filling will not be placed in the cloth. To overcome this defect the rod that carries the pawl operating the box chain, instead of being connected directly to the cam on the cam-shaft, is connected to what is known as the **still box motion.**

17. Construction.—A view of this motion is shown in Fig. 12. The rod n_1 operates the pawl working the box chain. At its lower end this rod is connected to a lever r fulcrumed at the point r_1. Fulcrumed at this same point is another lever s, which carries two arms s_1, s_2, held together by the spring s_3. On the cam-shaft of the loom is placed a double cam, one part of which t_1 operates the lever s, while the other part t acts on the lever r. These levers have a point of contact at r_2, and are thus prevented from coming any closer together. The lever r carries, at the point s_4, a stud that works in a recess formed by the two arms s_1, s_2. Thus, as the lever s is raised by the action of the cam t_1, the lower arm of the lever r will also be raised by means of the connection formed at s_4, provided that there is nothing to prevent its action. On the other hand, when the lever r is depressed by the action of the cam t, the lever s will also be lowered by means of this same connection. Connected to the upper end of the lever r is an arm u that rests and slides on the plate u_1. A rod v passes through the brackets v_1, v_2 and contains a slot v_4 through which the arm u passes in its backward and forward movement. At its upper end the rod v carries a projection under which the finger v_3 passes; this finger is setscrewed to the rod beneath the breast beam and is operated by the filling stop-motion.

Digitized by Google

18. Operation.—The operation of this mechanism is as follows: So long as the shuttle contains the filling, the cams t, t_1 will give an up-and-down movement to the levers s, r, since although each cam acts on only one lever, by the connection at the point s_4 the action of each cam will be imparted to both levers. The motion of the levers being, in turn, imparted to the rod n_1, it will turn the box chain and thus give the desired pattern of the filling.

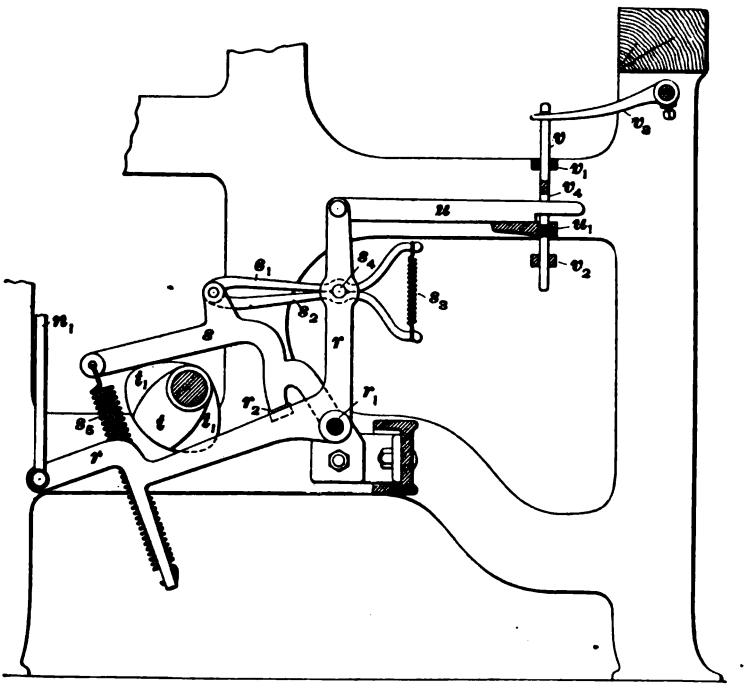

FIG. 12

When, however, the filling runs out, although the loom may run for two or more picks, yet by means of this device the rod n_1 will not operate the box chain. This is accomplished in the following manner: When the filling is absent, the filling-fork lever will engage with the filling-fork hook and move back the filling-fork slide. As this slide is pushed back it turns the rod beneath the breast beam to

Digitized by Google

which is connected the finger v_3 shown in Fig. 12. As this rod is turned it will lift the finger v_3, which in turn will raise the rod v and by this means bring the lower end of the slot v_4 above the level of the plate u_1 on which the arm u slides. Thus, when the cam t_1 lifts the lever s it will also tend to lift the lower arm of the lever r, but will be prevented from doing so by the arm u, which, in being pushed along the plate u_1, will come in contact with that part of the rod v that is projecting above the plate. The stud s_4 will be pushed out of the notch formed by the arms s_1, s_2, the spring s_3 allowing this to be accomplished without the breaking of any parts. After the filling has been inserted and the loom started, the different parts of this motion will assume their former positions, since, as the pressure of the cam t_1 is taken from the lever s, the two levers will be brought together through the action of the spring s_2, which is extended when the lever r is prevented from operating.

FIXING OF BOX LOOMS

19. Although the fixing of box looms may be found to differ to a certain extent from the fixing of looms previously described, all the points that apply to plain looms apply equally well to the box loom, and should be carefully borne in mind when considering the additional difficulties connected with box looms.

20. Timing the Boxes.—When starting a box loom, the first object to be attained is the timing of the boxes in such a manner that they will not start to change before the shuttle is well into the box and will be completely changed before the loom commences to pick. This is very essential, since if the boxes commence to change before the shuttle is well boxed, the shuttle will be caught in the mouth of the box and will thus prevent the changing. On the other hand, if the loom commences to pick before the boxes are completely changed, the bottom of the box will not be level with the race plate when the shuttle is thrown.

Digitized by Google

There are several methods of timing the boxes, one probably being as good as another, so long as it accomplishes the result of changing the boxes in time. One method is to set the box-changing device so that the boxes will have moved about $\frac{1}{4}$ inch when the dagger on the protector rod strikes the bunter. On the Crompton loom, it is a good plan to set this motion so that the cam on the end of the cam-shaft will just commence to move the star wheel when the crank-shaft of the loom is on the bottom center. In whatever manner the boxes may be timed, the two results mentioned must always be accomplished. To set the cam that operates the box chain on the Crompton loom have the shuttle on the shipper side. Turn the loom until the crank-shaft is slightly beyond its front center; then set the cam so that it will just start to raise the connecting-rod that imparts the motion of the cam to the lever n, Fig. 8, operating the pawl n_1. When the pawl that operates the box motion is at its fullest throw, the risers and sinkers of the box chain should be directly beneath the levers and the cylinder should be held stationary after the pawl leaves the ratchet gear.

Another point that should be noted in connection with the setting of the Crompton box motion is the position of the sliding projections that engage with the star wheel. When there are no risers on the box chain under the levers, the star wheel and sliding projections should be in such a position that they will clear each other. There should also be a little loose motion in the rods connecting the sliding projections with the levers that rest on the box chain. When these are properly set, test the lift of the levers by placing a riser beneath them, making sure that the sliding projections are forced into such a position that they will engage correctly with the star wheel. Care should be taken that these sliding projections are not moved farther than is necessary.

21. Leveling the Boxes.—After the boxes have been timed so that when changing they will start and stop correctly, it is necessary to level them; that is, the lifting parts should be so adjusted that whenever a box is brought into

Digitized by Google

position, the bottom of that box will be on an exact level with the race plate of the loom. This will sometimes be found to be a difficult matter, since in many cases all the boxes, with the exception of one, may be in a correct position, and yet changing the one that is a little out of true may so alter the lift of the others that, when they are again brought into position, they will be found to be either above or below the correct position they should occupy. The leveling of the boxes is a matter of leverage, and it is necessary to so set the different arms of the levers that they will give the exact throw required.

When leveling the boxes, bring the box motion into its normal position; that is, have the top box in such a position that the shuttle it contains will be acted on by the picker. Set the bottom of this box level with the race plate of the loom by adjusting the lifting rod by means of the check-nuts a_4, a_5, Fig. 3, placed at its lower end. After the first box has been leveled in this manner, bring the second box into position by turning the front shaft. Both the front and back shafts may be readily turned by hand in order to bring any desired box into position, and when leveling the boxes it is customary to turn the shafts in this manner so as to facilitate the operation. When the second box is in position, level it by means of moving the stud g_2, Fig. 3, in the slot at the forward end of the lever g. After leveling the second box return to the first and see that this box is in its correct position. Moving the stud g_2, in order to level the second box, may have thrown the first box slightly out of position; consequently, it will be necessary again to level this box by means of the nuts a_4, a_5. With the first and second boxes level, lift to the third box by means of turning the back shaft. If this box is not level it may be adjusted by moving the stud that connects the rod e_3 to the lever g; a slot in the back end of this lever provides for this adjustment. If this slot does not provide a sufficient adjustment the crank e_2, Fig. 3, may be moved up or down slightly by means of loosening the nuts that secure it to the plate e_1. Having leveled the third box, return to the first and second

Digitized by Google

and if they are not level adjust them as described. With the first, second, and third boxes level, lift to the fourth by turning both the front and back shafts. If this box requires any adjustment it should be divided between the slots in the two ends of the lever *g* and the crank-adjustment. With the fourth box level, return to the other boxes and see that they are correct.

The boxes should work freely in the grooves in which they slide and yet not be so loose as to result in the shuttle being given an uneven throw when acted on by the picker. If they are tight in the grooves, they will be raised and lowered in a jerky manner, which is very liable to result in the picker being caught at some part of its throw, thus preventing the lifting of the boxes.

22. Regulating the Binders and Shuttles.—After the box motion has been properly timed and the different boxes correctly leveled, the shuttles and binders should be regulated. The binders on a box loom are made of malleable iron and, consequently, can be bent to any shape desired. It should be the aim, therefore, of every fixer to see that the shuttle is checked in as easy and uniform a manner as possible. On the inner side of the binders are grooves, the edges of which should be kept perfectly smooth so that they will not cut the filling.

In the case of a 4×1 loom, the weaver should have at least six shuttles, all of which should be of an exact size and weight; otherwise, some of them will work in a perfect manner, while others will not work satisfactorily. When a new set of shuttles is started in a box loom, care should be taken to have them in such a condition that any shuttle will run as well in one box as in another.

23. Shuttles Catching.—A defect that probably occurs as frequently as any on a box loom is the catching of the nose of the shuttle in the picker, thus preventing the lifting of the boxes.

At the end of the lay on the box side, directly behind the picker, is a hollow space, which should be packed sufficiently

Digitized by Google

to cause the front part of the picker to come on a line with the plate that serves for the back of the boxes. This packing generally consists of a roll of cloth and, in addition to preventing the shuttle from entering the box too far, also serves as a bunter for the picker, thus helping to check the shuttle more gradually and prevent its rebounding in the box.

On the Crompton box loom, there will be found on the picking cam that is placed at the box side of the loom, a device intended to prevent the shuttle from being too far in the box when the boxes are changing. This device consists of an extra stud on the picking cam placed in such a position that it will come in contact with the picking cone just as the shuttle comes to rest in the box. By this means, the picking stick will be moved in toward the loom about $\frac{1}{8}$ inch, which in turn will push the shuttle that distance, thus preventing any chance of its being caught. This additional point on the cam is not of course so large as the regular picking cam-point, but is only sufficiently large to accomplish the desired result.

24. Attaching the Picker.—As mentioned, the picker on a box loom slides back and forth on a rod, or spindle, a_1, Fig. 1. Before placing the picker on this spindle, care should be taken to see that it is perfectly straight, since in some cases pickers become so warped that the hole through which the spindle passes will not be shaped correctly and, consequently, will not allow the picker to move freely on the spindle. In such cases, the best plan is to place the picker in a vise and after making it as straight as possible, file out the hole of the picker sufficiently to enable it to work freely on the spindle. On the end of the spindle next to the loom end a piece of leather should be placed, in order to prevent, as far as possible, the strain that would otherwise come on the picker stick when it strikes the forward part of the box in being thrown forwards by the picking motion.

25. One other point should be noted in connection with box motions; namely, when they are applied to looms having

Digitized by Google

the dobby, the chain operating the boxes should always be timed correctly with the chain operating the harnesses, in order to have the filling inserted at its proper place in the weave.

POWER AND SPEED

26. The power required to drive a box loom is necessarily somewhat in excess of that required to drive a plain loom, owing to the additional motions that are brought into use. The required power will also depend to a certain extent on the number of boxes on the loom. A test made in a mill running box looms resulted as follows: One hundred and sixty 40½-inch Crompton (4 × 1) box looms running 158 picks per minute and weaving 27-inch plain goods consumed 58.19 horsepower, or an average of 2.75 looms per horsepower.

In many cases the box motion is applied to looms having dobbies attached and, in such cases, the necessary horsepower to drive the loom will be even greater. A test to show the marked difference in horsepower required between looms with and without box motions resulted as follows: Looms on 16-harness work without the box motion were running at the rate of 4.43 looms per horsepower, and when the same work was placed on box looms, it was found that 2¼ looms were consuming 1 horsepower.

27. It naturally follows that the speed of a box loom must be less than that of a plain loom. The exact speed at which the loom can be run will depend to a great extent on the number of boxes and to an even greater extent on the class of weave being run; that is, the character of the yarn and also the method of inserting the filling, whether it can be placed in the cloth by simply raising or lowering the boxes in regular order or whether it is necessary to resort to many serious jumps. A good speed for these looms may be anywhere between 140 and 160 picks per minute, the exact speed depending on the conditions mentioned.

Digitized by Google

Digitized by Google

JACQUARDS

(PART 1)

JACQUARD CONSTRUCTION

INTRODUCTION

1. Purpose of the Jacquard.—The weaves for fabrics to be woven on looms with cam or dobby shedding attachments must necessarily be limited in the number of ends having different interlacings, since the largest number of harnesses usually employed in a dobby is 30, while the scope of cam-looms is considerably less than this. Dobbies can be constructed with a somewhat larger capacity, but their use is not advisable, since the slight gain in capacity is more than offset by the detrimental effect, on the warp, of a larger number of harnesses, and the increased skill required on the part of the weaver. When making a weave for a loom with a 30-harness dobby, the designer is limited to the use of 30 ends working differently, that is, interlacing with the filling in a different manner from other ends. It is true that by using different methods of drawing in the ends through the harnesses, a weave can be made to occupy as many ends as may be desired; many different effects may thus be produced that at first glance appear to require that a very large number of ends shall work differently, although when any such fabric is analyzed, the entire weave will be found to contain not more than 30 ends that interlace with the filling in a different manner.

For notice of copyright, see page immediately following the title page

Digitized by Google

When, therefore, a cloth is to be woven with a weave that necessitates a greater variety of interlacing of the ends than is possible when using a dobby, it becomes necessary to use a shedding machine of greater capacity—the *jacquard*. The principal distinction between the dobby and the jacquard is that whereas the dobby employs harnesses through each of which are drawn a large number of ends that consequently work alike, the jacquard employs a shedding mechanism and harness arrangement by means of which each end of the warp may be operated independently if so desired, it being thus possible to have every end of the warp interlace with the filling in a manner different from that of any other end. Jacquards are usually arranged, however, so that 4, 5, 6, 7, or 8 ends work alike.

2. Invention of the Jacquard.—The jacquard machine derives its name from its inventor, Joseph Marie Jacquard, a mechanic of Lyons, France, who first turned his attention to improving the means of raising the harnesses in looms for figured weaving during the latter part of the 18th century, although it was not until early in the 19th century that he finally perfected the machine bearing his name.

The jacquard machine is considered one of the most nearly perfect inventions ever made, for the reason that not alone the principle, but even the essential parts have remained practically the same as originally conceived by Jacquard, although, of course, in the modern jacquard many improvements have been made that have added greatly to its efficiency.

3. Classes of Jacquards.—A jacquard machine is a mechanism placed above a loom for the purpose of automatically selecting and raising the desired warp ends so as to form the required shed for the insertion of each pick of filling. The expression *jacquard loom*, which is frequently used, is a misnomer, since the term jacquard applies to the shedding mechanism only; this can be applied to almost any ordinary loom by making slight alterations. In Fig. 1, a jacquard machine is shown placed above a loom and connected to it

Digitized by Google

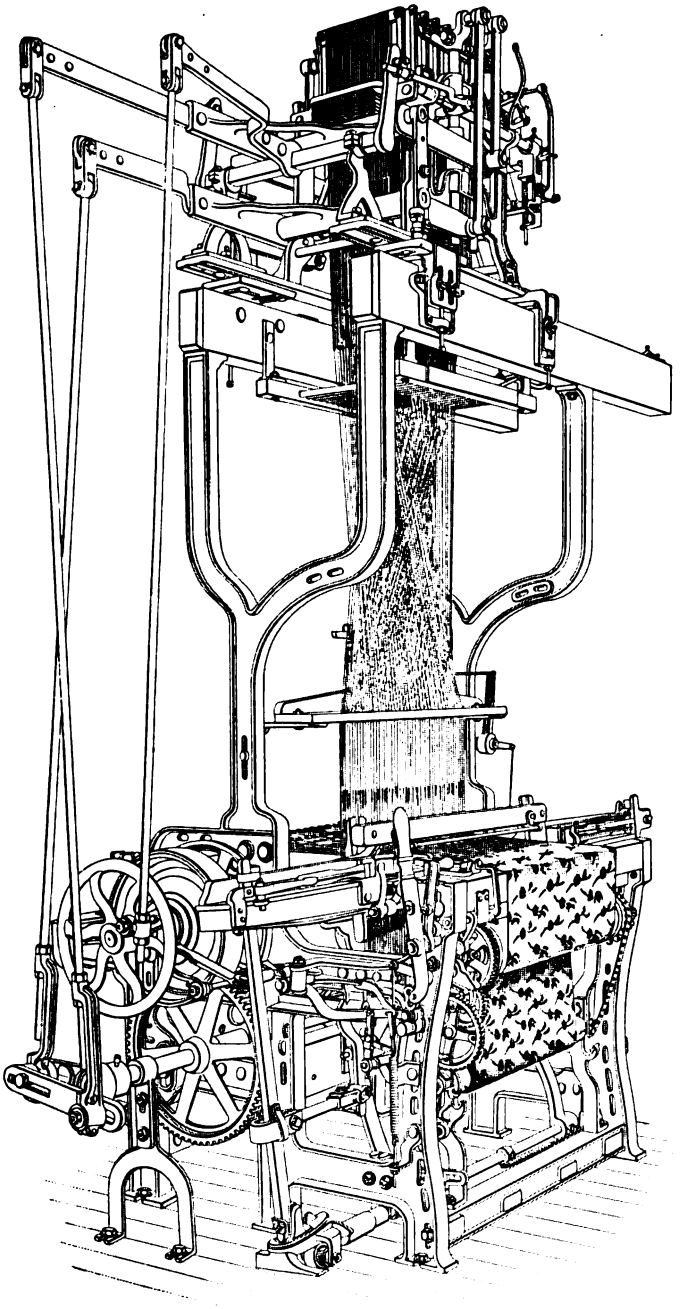

FIG. 1

Digitized by Google

in the manner usually employed. This illustration gives the appearance of the jacquard machine and loom together when in operation.

The jacquard machines most frequently used at the present time may be divided into three general classes, as follows: *single-acting*, or *single-lift*, jacquards, which may be either *close-shed* or *split-shed* machines; double-acting jacquards with one cylinder, which are known as *double-lift single-cylinder* machines; and double-acting jacquards with two cylinders, known as *double-lift double-cylinder* machines.

SINGLE-LIFT JACQUARDS

GENERAL PRINCIPLES OF CONSTRUCTION AND OPERATION

4. Fig. 2 shows a perspective view of a **single-lift jacquard** complete, while Fig. 3 shows a cross-section through certain of the essential parts of this machine. Those parts shown in both figures are lettered alike and reference should be made to each when studying the descriptions.

The lower part *b* of the jacquard is known as the *grate*, *grating*, or *rest board*. The hooks *a* pass through this grate and by means of their curved points a_1 are supported by it. The neck cords a_2, to which the harness lines are fastened, are attached to the lower ends of the hooks, and by this means the warp ends are raised and lowered as desired. The arrangement of the harness lines is shown in Fig. 1; they are attached to the hooks and pass downwards to the warp ends that they govern.

In order to accomplish the raising of the hooks and, consequently, the lifting of the harness lines and warp ends, it is necessary that some mechanism shall first select the hooks that it is desired to raise, after which some other mechanism must be brought into use to raise those hooks. The latter mechanism, or the lifting of the hooks, will be considered first, because it is necessary to understand this part of the

Digitized by Google

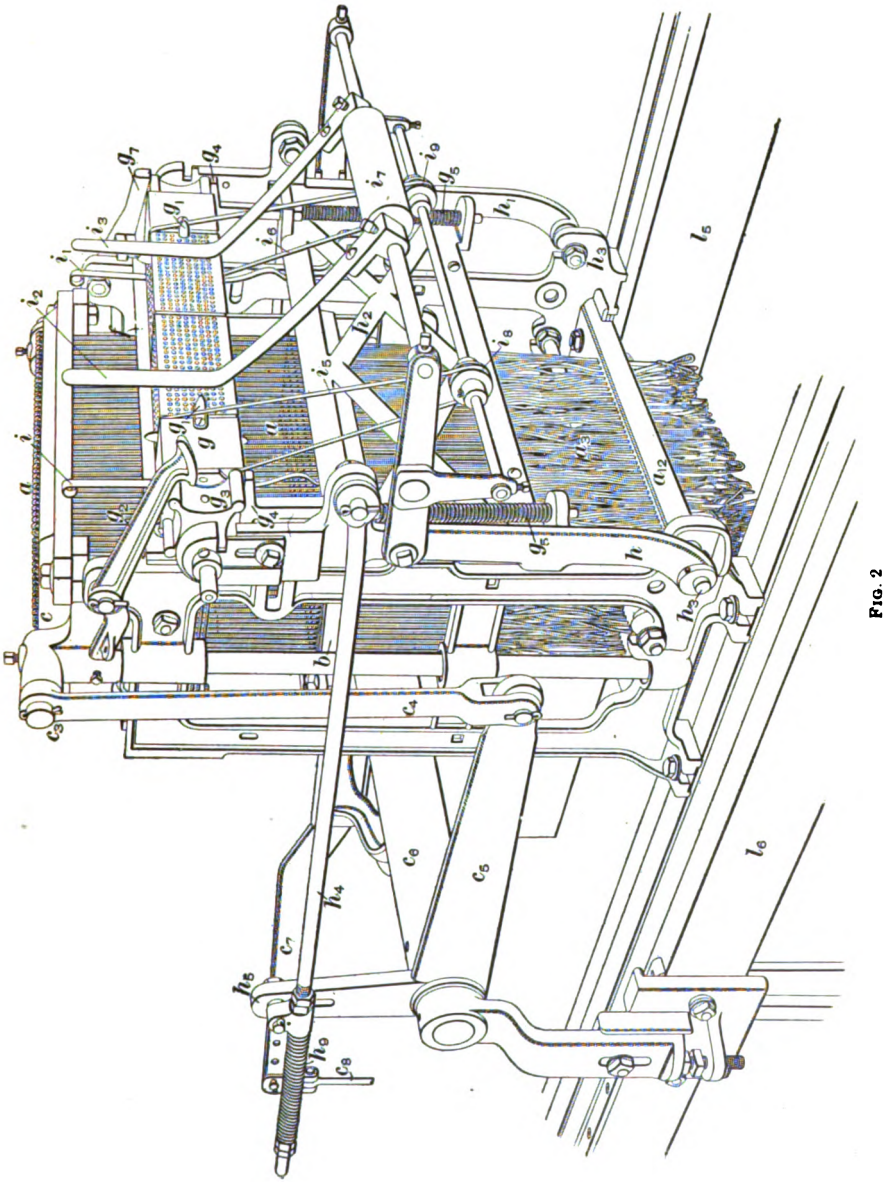

FIG. 2

Digitized by Google

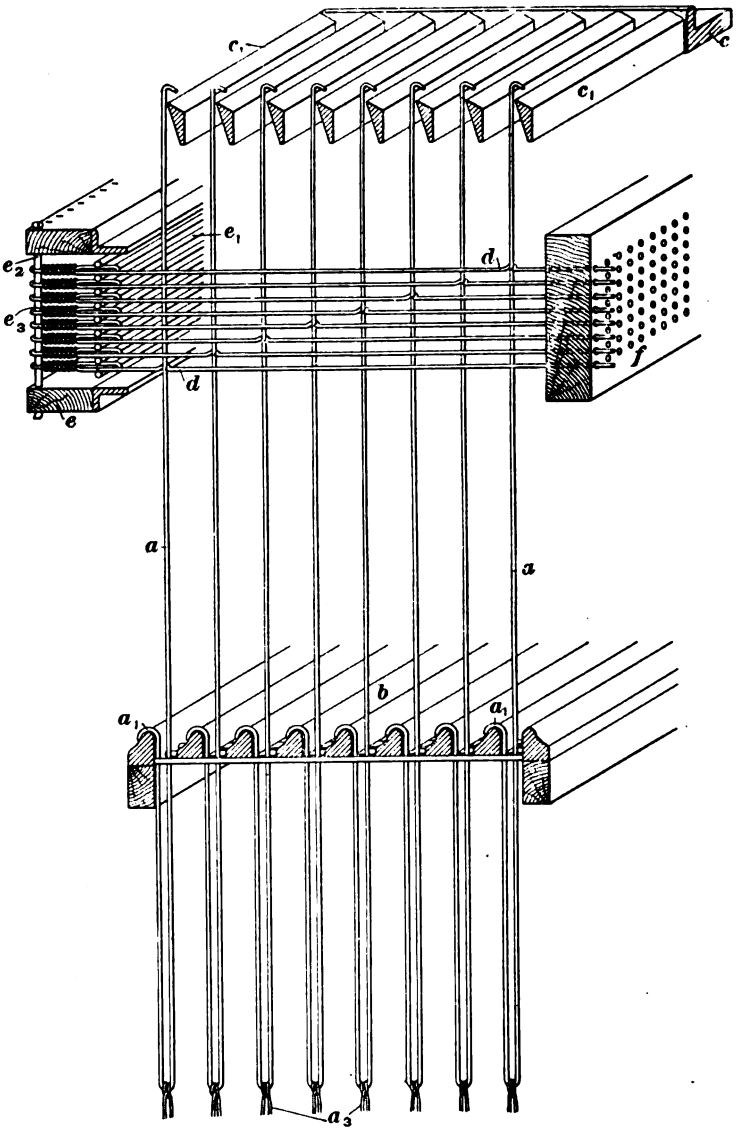

FIG. 8

Digitized by Google

machine in order to comprehend that directly connected with the selection of the hooks.

5. Referring to Figs. 2 and 4, a lever c_7 attached to a shaft c_8 is raised and lowered by means of a rod c_9, which is fastened by a stud, or crankpin, to a wheel c_{10} on the crankshaft c_{11} of the loom. Also attached to the shaft c_8 are two arms, the one shown in Fig. 2 being marked c_6. These arms are connected by means of rods c_4 to studs c_3 on the casing c of the *griff* (sometimes spelled *griffe*), or *grife;* only a

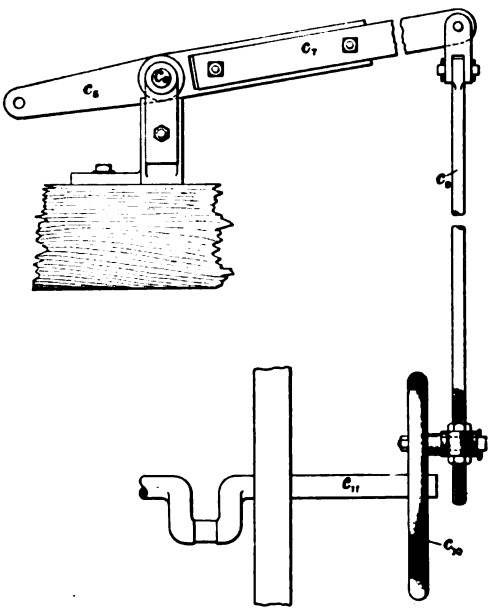

FIG. 4

portion of the griff is shown in Fig. 3. The casing c extends around the knives c_1, thus forming a rectangular frame, with the knives, which are shown broken in Fig. 3, extending from side to side. As the rod c_9 is alternately lowered and raised, it will in turn raise and lower the griff, and since the rod c_4 and stud c_3 are duplicated on the other side of the machine, although not shown in Fig. 2, the griff will thus receive an equal lift at each side. Since the upper curved

Digitized by Google

ends of the hooks *a*, Fig. 3, can be made to assume such a position that they will be caught by the griff in rising, the hooks and, consequently, the harness lines will be lifted by the griff.

6. Referring next to the mechanism that selects the hooks to be raised, each hook is connected to a wire *d*, Fig. 3, known as a *needle*, that runs at right angles to the hooks and is connected at one end to a spring contained in the *spring box e*. Thus the needles are constantly being pushed forwards by these springs and held in such a position that they will cause the curved top of the hooks to become engaged with the griff. Provided that there were no mechanism to offset the action of the springs, all the hooks would occupy this position continually and would consequently be lifted by the griff each time it was raised. At the end opposite the springs, the wires pass through, and project slightly beyond, the *needle board*, or *face plate*, *f*. The cylinder *g*, Fig. 2, is capable of being brought against the needle board, and also contains holes that exactly correspond with the position of the needles as they project through the needle board. Thus, if nothing intervened between the needle board and the cylinder, all the hooks would be lifted by the griff in rising, since the needles are perfectly free to be pushed forwards by the springs.

7. The Cards.—Laced together and passing around the cylinder, as shown in Fig. 1, are a number of **cards** similar to the one shown in Fig. 5. This card is shown with all the

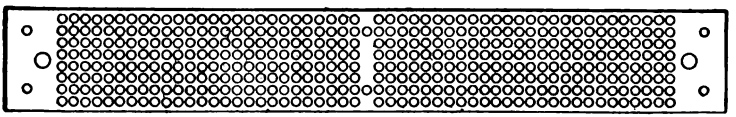

FIG. 5

holes cut, but it is possible to have any part of the card uncut, the number of holes cut and their position depending on the hooks that it is desired to lift.

If a number of cards, all similar to Fig. 5, should be laced together and passed around the cylinder *g* and the machine

Digitized by Google

then operated, the needles would still retain the position that would cause the hooks to be lifted by the griff, since the holes in the cards would exactly correspond with those in the needle board and cylinder. On the other hand, should the cards not be cut at all, every needle in the machine would be pushed back, the hooks would not engage with the griff, and all the harnesses would remain down. It is by cutting some of these holes and not cutting others that some ends of the warp are raised and others left down, thus determining the weave.

The large holes, one at each side of the card shown in Fig. 5, are known as *peg holes*, and it is through these that the pegs g_1 shown on the cylinder g pass, thus holding the card in the exact position desired. The two small holes at each end of the card and also the two in the center are known as *lace holes* and are used when lacing the cards together; that is, attaching them to one another by means of cords so that they form a continuous chain.

One card determines the raising and lowering of the ends for only one pick; consequently, as many cards must be cut as there are picks in one repeat of the weave being produced, and these cards then laced together and passed around the cylinder. At each pick of the loom a new card is brought against the needle board and determines the hooks to be raised and those to remain down for that pick. In order to accomplish this, it is of course necessary to revolve the cylinder. The mechanism that has this for its object will be described later, as it is desired at present to deal only with those parts that bear directly on the lifting and lowering of the hooks.

8. The operation of the parts so far referred to is as follows: One face of the cylinder g together with a card is brought against the needle board f. Wherever a hole is cut in the card, a needle will project through, and the hook controlled by that needle will remain in such a position that its curved upper end will be caught by the griff when rising. Wherever the card is not cut, the needles coming against the

Digitized by Google

card will be pushed back and the hooks controlled by those needles will be moved out of the path of the griff and will consequently remain down. As the crank-shaft of the loom revolves, the rod c_3, Fig. 4, will be lowered, thus raising the griff. As the griff is raised, all hooks controlled by needles passing through holes in the card will be caught and carried up by it, while all hooks controlled by needles that are pushed back by the card will escape the griff and remain down. In this manner the *shed* is formed.

During each revolution of the crank-shaft of the loom, the griff is both raised and lowered; consequently, the machine is *single-lift*. Before forming the shed for the next pick, all the warp ends are brought level at the bottom of the shed, thus forming a *close-shed*.

DETAILS OF CONSTRUCTION

9. The **griff** of a jacquard consists of the casing c, Fig. 3, and knives, or blades, c_1. There are as many of these knives in a jacquard as there are hooks in the short row, the number in this case being eight, although the number of hooks in both the short and long rows is dependent on the total number of hooks in the machine. The sides of the knives facing the hooks are beveled off or else the knives are inserted in the griff in a slanting position, in order to lessen their liability, when they are descending, of striking and bending the tops of the hooks that are down. If the sides of the knives were vertical, their lower edges in dropping would be certain to strike the tops of the hooks that were down. Even knives similar to those in Fig. 3 will at times strike and bend the tops of the hooks. When a hook is bent in this manner it is said to be *crowned*.

Another construction of the knives that also tends to prevent the crowning of the hooks is shown in Fig. 6. In this case there is, in addition to the slanting portion of the knife, a part that is vertical, the whole forming a knife deep enough to have its lower edge below the top of the hook, even when the hook is down and the knife up. With this construction there is of course no possibility of hooks being crowned, but

Digitized by Google

the additional depth of the knives makes it more difficult to see into the machine if it is desired to examine any of its parts.

The construction shown in Fig. 7 is another method that is sometimes adopted. In this case the tops of the hooks are extended above the highest point reached by the griff in its lift and, consequently, the knives are at no time in such a position that they can strike the tops of the hooks. The

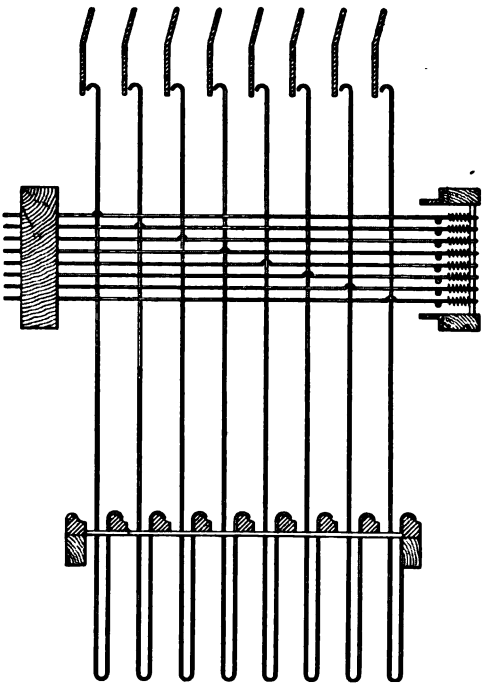

FIG. 6

disadvantage of a machine having its hooks and knives constructed in this manner is the rapid wearing away of the hooks, caused by constant chafing against the knives.

10. The Needles.—Fig. 8 is a plan view of a complete needle, similar to the top one shown in Fig. 3. The former represents the needle as it would appear when looking downwards on it; the curved part that operates the hook is shown

Digitized by Google

bent horizontally. In Figs. 6, 7, and some others, the curve of each needle is shown as if inclined upwards; this is for the sake of clearness, as the needles are actually bent horizontally out of a straight line. Each needle in a vertical row differs from any other in the same row as to the position of the curved portion made to receive the hook. The top one has the curve at the longest distance from the spring

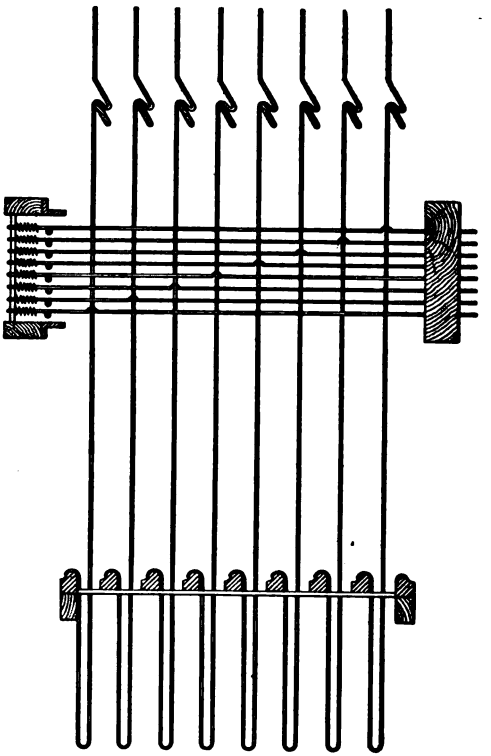

FIG. 7

box; the second one, a little nearer; and so on, until the bottom needle has the curved part nearest the spring box. As the hooks of a 400-hook machine are arranged in eight long rows, each operated by a different knife, this variation in the construction of the needles is necessary in order to bring the curved part of each in the exact position to receive

Digitized by Google

its hook. The hook passing through any one needle is locked in position by the other needles in the same vertical row, as shown in Fig. 3. On one side of each hook is the curved part of its needle, while the other seven needles pass

FIG. 8

on the other side of it. In this manner the hooks are prevented from moving out of their correct position, although any hook may be readily removed from the machine in case it is desired to fix any of the parts.

Other styles of needles are sometimes adopted, the middle portion of one of which is shown in Fig. 9. In this style the hook passes through a loop formed by the needle making

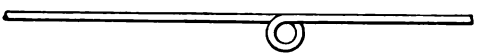

FIG. 9

a complete turn. The style of needle shown in this figure is not as commonly adopted as that shown in Fig. 8, since the latter is more easily removed in case repairs become necessary.

11. The Spring Box.—The construction of the **spring box** is shown in Fig. 3. It consists of top and bottom pieces connected by flat wires e_2, one wire passing through the eyes, or loops, of the needles in each vertical row. Rods e_1 connect one end of the spring box to the other and serve to separate the horizontal rows of needles. Carried by each needle is a spring e_3 that is compressed between the wire e_2 and the shoulder on the needle. These springs keep the needles pushed forwards except when they are pressed back by the cards.

12. Jacquard Harness.—The harness of a jacquard is entirely different from the harness on looms using cams or dobbies. A view of one line of a jacquard harness, together with all its attachments, is given in Fig. 10, the different parts with their letters of reference being as follows: *a*, the

Digitized by Google

FIG. 10

jacquard hook; a_2, the neck cord, which is threaded through a hole in the *bottom board* a_{12}, Fig. 2; a_1, a harness line, 8 of which are attached to the neck cord in this case, all threaded through holes in a board known as the *comber board* extending across the loom, as seen in Fig. 1; a_3, the top loop, mid-piece, or sleeper, which is made of a double thread twisted and varnished; a_6, the mail, or eye, which contains three holes, the warp end being drawn through the center one; a_{10}, the bottom loop, or hanger, made of a double thread twisted and varnished; a_{11}, the weight, or lingoe. The sleeper, mail, hanger, and lingoe are frequently spoken of as one piece and are then known as the **coupling.** A harness line is sometimes spoken of as a *mail line.*

The action of the griff on the hooks is non-positive, since it simply raises the hooks without lowering them; consequently, some such attachment as the lingoe must be adopted to lower the hooks when the griff drops.

All parts of a jacquard harness are not necessarily similar to those shown in Fig. 10, since in many cases different methods of construction are adopted. This illustration, however, shows the general principles involved.

CYLINDER MOTIONS

13. Method of Turning the Cylinder.—The cylinder consists of four flat faces, one of which must press against the needle board at each pick of the loom. It is impossible to turn the cylinder when it is against the needle board, and it therefore becomes necessary to move it from the needle board in order that it may be turned.

The method adopted to turn the cylinder is shown in Fig. 2. As the cylinder g is moved from the needle board, the hook g_2, sometimes called the *pawl*, or *catch*, which is pivoted to the frame of the machine, will catch the *head*, or *lantern*, g_3 of the cylinder and turn it quarter way around, thus causing the next face

Digitized by Google

of the cylinder to be presented to the needle board when the cylinder is again brought in. To prevent the cylinder from turning more than quarter way around, and also to keep it steady, so that it will always return squarely against the needles, it is held firmly by a hammer g_4, which is pressed against the lantern of the cylinder by springs g_5.

14. Mechanism for Moving Cylinder From Needle Board.—Several cylinder motions are applied to jacquard machines, all of which may be divided into two general classes, known as *self-acting cylinder motions* and *independent cylinder motions*, according to whether they are or are not actuated by the griff. All cylinder motions, whether independent or self-acting, should be provided with some means of regulating the time at which the cylinder is brought against the needle board, in order that the cards may act on the needles at the proper time. The motion must also give to the cylinder a dwell during the time that it should be kept pressed against the needle board, to allow the griff sufficient time to rise and thus escape the hooks that are pressed back by the card acting on the needles.

15. Independent Cylinder Motions.—An independent cylinder motion may be defined as one that moves the cylinder in and out by means of some mechanism entirely separate from the jacquard machine itself. This mechanism is usually driven by an eccentric on the crank-shaft of the loom.

A good type of this class of cylinder motions is shown in Fig. 11. The cylinder is supported by two arms h, h_1 that are pivoted at the points h_2. These arms are connected by a cross-piece h_3, the whole being known as the *cylinder gate*. Connected to the arm h is a rod h_4 attached to a bracket h_6 carried by the cross-shaft c_6, while a similar rod connects the arm h_1 to the bracket h_6, which is at the other end of the cross-shaft c_6. Connected to the shaft c_6 is the lever c_7 that is worked by the rod attached to the wheel on the crank-shaft of the loom. As the lever c_7 is thrown up by the revolving of the crank-shaft it acts through the shaft c_6,

Digitized by Google

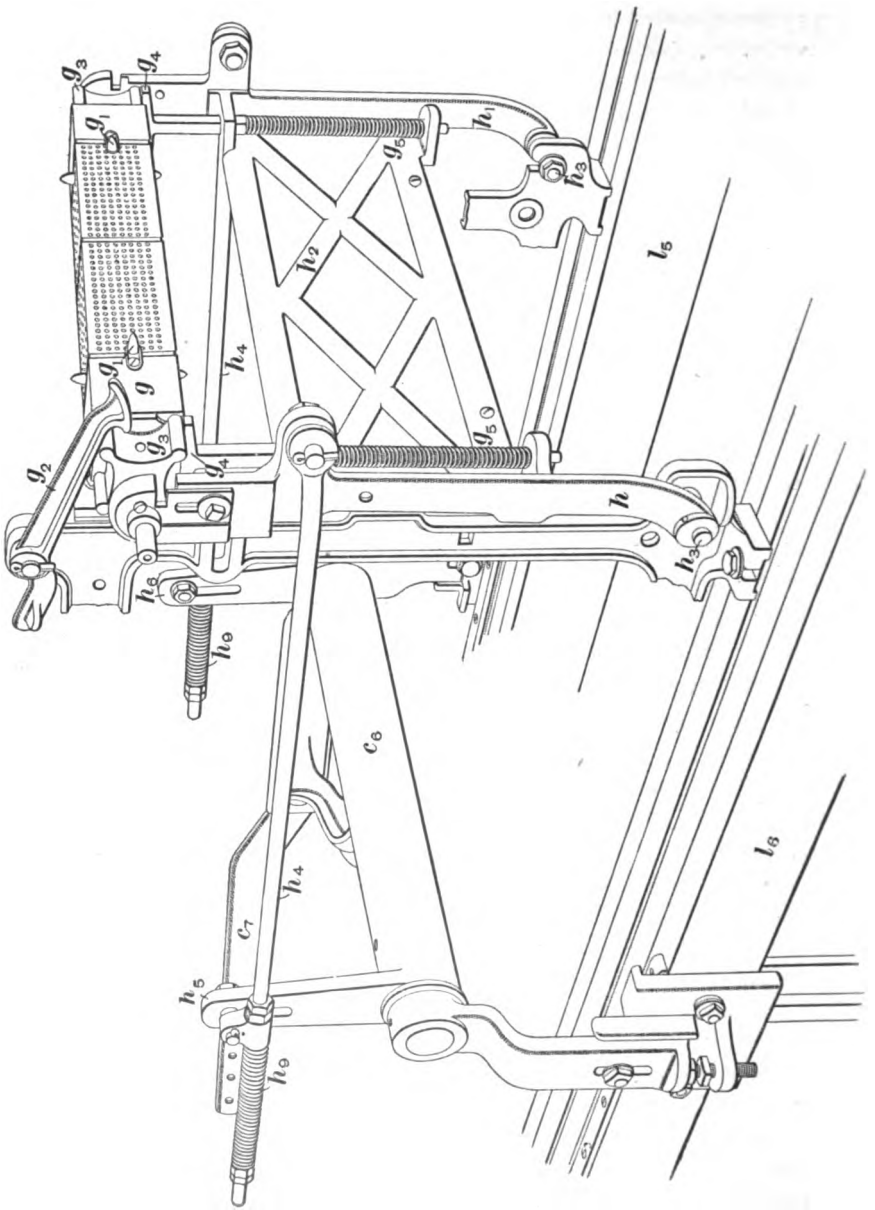

FIG. 11

Digitized by Google

brackets h_5, h_6, and rods h_4 to throw the cylinder gate away from the needle board; while, on the other hand, when the lever c_7 is brought down, the cylinder is brought in against the needle board. Springs h_8 are attached to the rods h_4 in order to prevent the breakage of any parts should an obstruction come between the cylinder and the needle board.

16. Another independent cylinder motion is shown in Figs. 12 and 13. The cylinder g, Fig. 12, is supported by a lever h pivoted at h_2 and connected by a rod h_4 with a swivel-joint to an arm s that is setscrewed to the shaft s_1, which is carried in bearings supported by the framework of the loom. A segment casting s_2, Fig. 13, is also setscrewed to the shaft s_1 and contains a slot with which a projection s_3 engages. This projection is carried by a sliding plate s_{13}, supported by a casting s_4 that is loose on the shaft s_1. A stud s_5 of the plate s_{13} extends through a bracket, or projection, s_{11} of the casting s_4. The plate s_{13} also carries two other projections s_6, s_7, which are in contact with an arm s_9. This arm is pivoted to another arm s_8 fast on the shaft s_1 and cast in one piece with s_9; a spring s_{10} attached to

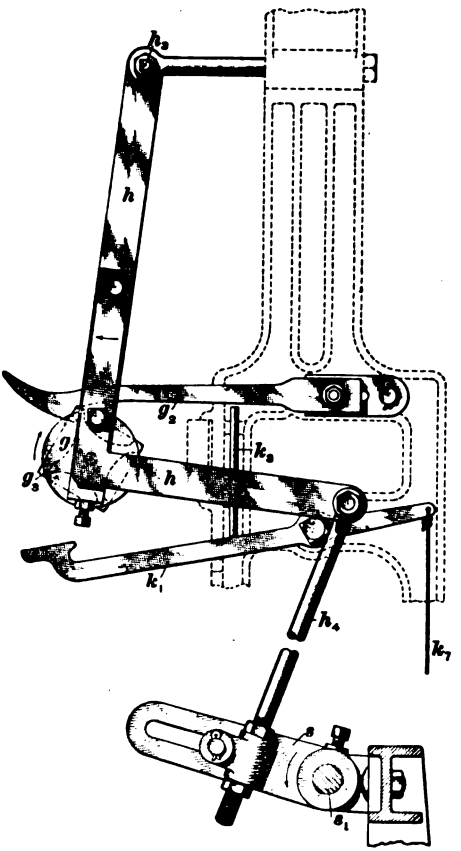

FIG. 12

Digitized by Google

the arm s_3 tends to force the upper end of the arm s_4 to the right, thus keeping the projection s_3 in the slot of the segment casting s_2. By this means, although the casting s_4 is loose on the shaft s_1, it will communicate to the latter any motion received when the projection s_3 is engaged with s_2, as the latter is fast to the shaft. Connected to the casting s_4 is a rod t that is operated by an eccentric t_1 on the crank-shaft of the loom. The action of this motion is as follows: As the eccentric t_1 revolves with the crank-shaft, the rod t is alternately forced up and down, imparting motion to the casting s_4 and consequently, by means of the connection that s_3 makes with s_2, giving an oscillating motion to the shaft s_1. This motion of the shaft being communicated to the rod h_4, Fig. 12, through the arm s, moves the cylinder g in and out.

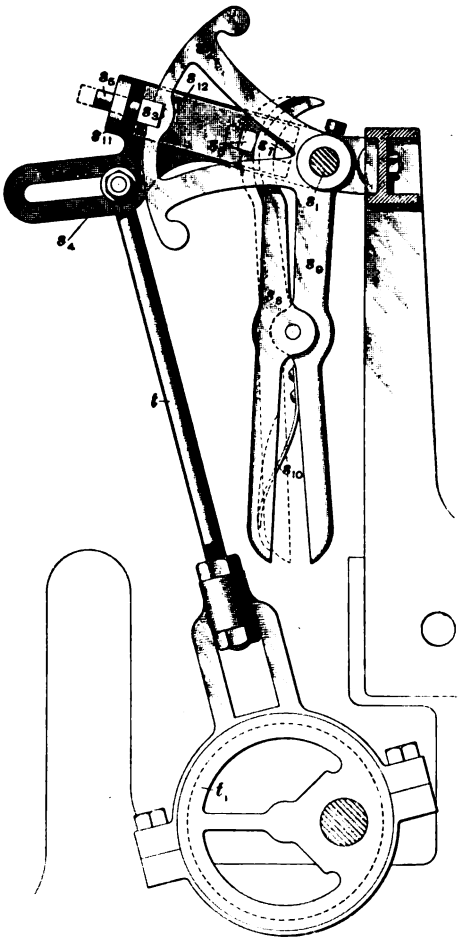

FIG. 13

On its outward movement, the lantern g_3 of the cylinder engages a pawl, or latch, g_2, thus turning the cylinder one-quarter of a revolution.

Digitized by Google

The advantage of an independent cylinder motion is that it is possible, by timing the eccentric, to bring the cylinder in against the needle board at any desired time; and by timing this motion correctly, there will be no danger of the needles being pressed back by the cards during the time that the hooks are held by the griff.

17. Self-Acting Cylinder Motions.—A self-acting cylinder motion may be defined as one that is actuated by some part of the jacquard machine itself; this part is in almost every case the slide rod that is connected to the griff.

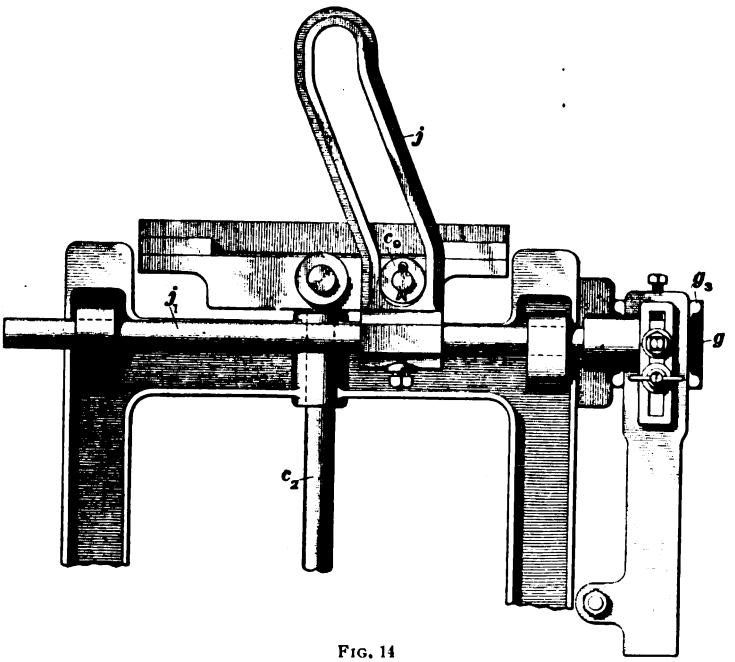

FIG. 14

Figs. 14, 15, and 16 show different types of the self-acting motion, all of which actuate the cylinder by means of the rising and falling of the griff.

Referring to Fig. 14, the griff carries a stud on which is a roller c_0 that works in the slot of the casting j, known as the *swanneck*. This swanneck is setscrewed to a rod j_1 that

Digitized by Google

works in bearings fastened to the side of the machine and is connected at one end to the cylinder g. Thus, any vertical movement of the stud fastened to the griff will give to the swanneck a horizontal motion, since the lift of the griff is exactly perpendicular while the slot in which the stud works is oblique. Moreover, any horizontal movement of the swanneck will, in turn, be imparted to the rod j_1, since these two parts are securely fastened by the setscrew. Moving the rod j_1 in its bearings will also move the cylinder g in the corresponding direction. Consequently, as the griff is raised and the stud brought to the upper part of the

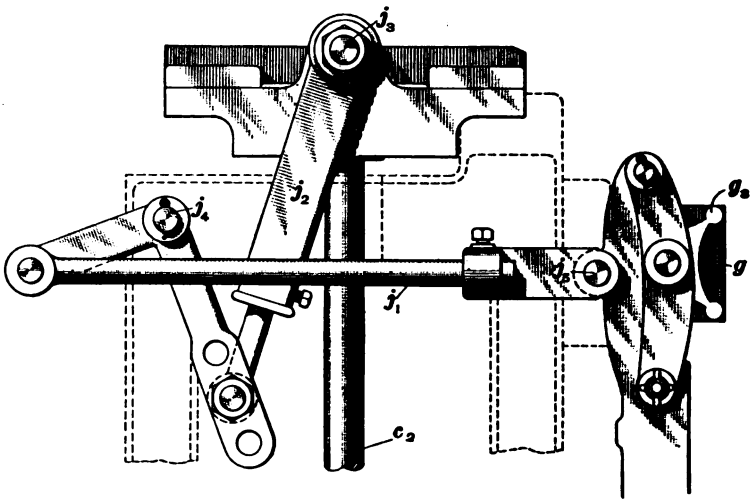

FIG. 15

slot in the swanneck, the cylinder will be pushed from the needle board; while, on the other hand, as the griff is lowered and the stud brought to the lower end of the slot, the cylinder will be brought in against the needle board. With such a motion as this, shown in Fig. 14, the dwell is given to the cylinder by means of that part of the slot in the swanneck that is exactly perpendicular.

18. Fig. 15 shows a cylinder motion that is similar in principle although slightly different in construction from that

Digitized by Google

shown in Fig. 14. In this case the stud on the griff, instead of carrying a roller working in a slot, is connected to an arm j_8, as shown at j_8. Fulcrumed at j_4 is a lever that serves to convert the vertical motion of the arm j_8 into a horizontal motion of the rod j_1, which is connected at the point j_5 to the cylinder frame. As the arm j_8 is raised and lowered by means of the action of the griff, the rod j_1 will be moved back and forth, which will result in the cylinder being alternately moved from, and brought against, the needle board.

19. Fig. 16 illustrates a self-acting motion that contains an escapement feature not found on any of the motions previously described. In this motion, the rod j_6 is connected at one end to the stud on the griff, while its other end is connected to a lever consisting of two parts j_7, j_8, each of which is fulcrumed at j_9. A strong spiral spring j_{10} connects these two parts, causing them to act similar to the levers shown in previous illustrations of self-acting motions and convert the vertical motion of the rod j_6 into a horizontal motion of the connection j_{11}. This connection is fastened to the cylinder frame and, consequently, as it is moved back and forth, the cylinder will be moved out and in.

The action of this motion is as follows: As the rod j_6 is lowered by the action of the griff it will carry with it the part j_7, which, being connected to the arm j_8 by the spring j_{10}, will lower this upper arm and cause j_{11}, together with the cylinder, to be brought in toward the needle board. The spring j_{10} is sufficiently strong to resist the action of the needles against the cards; consequently, all those needles that do not come opposite holes punched in the card will be pushed back. If, however, any obstruction comes between the cylinder and needle board, when the cylinder is brought in, the spring j_{10} will yield and thus prevent the breakage of any of the parts of the cylinder motion. Since all cylinder motions must have a certain length of dwell in order to permit the cards to keep the needles pressed back until the griff has been lifted above the heads of the hooks, this motion is set in such a manner that the cylinder will

Digitized by Google

reach the needle board before the rod j_8 has reached the limit of its downward stroke. This will cause the spring j_{10} to be extended and the two parts j_7, j_8 pressed apart. When the griff begins to rise again, the two arms must be brought

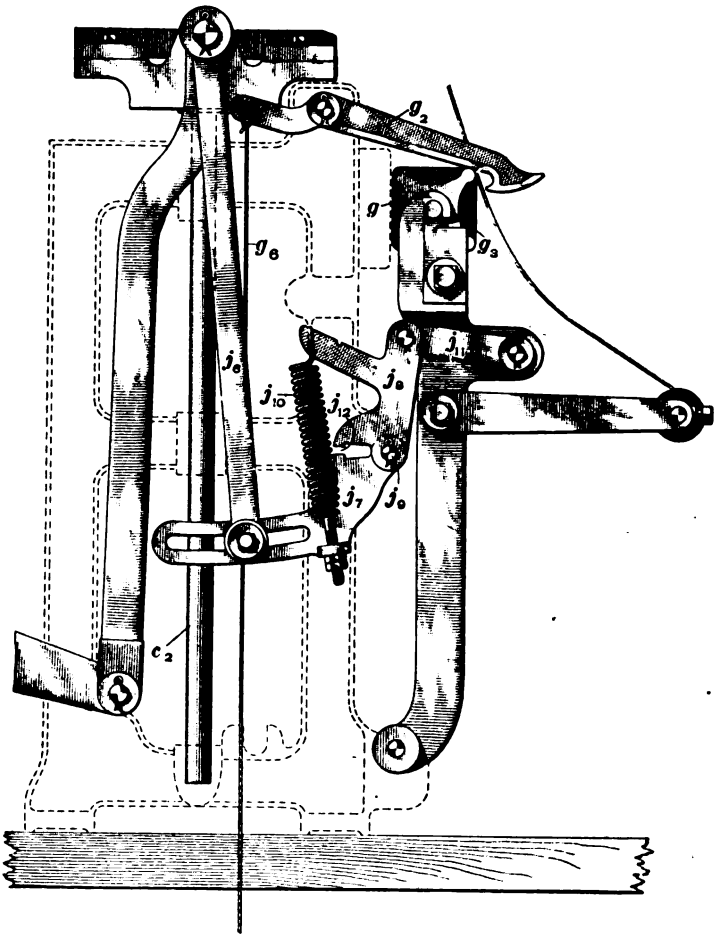

FIG. 16

together at the point j_{11} before any movement of the cylinder can take place, thus allowing the griff to rise above the heads of those hooks that are to be left down.

Digitized by Google

20. On all jacquards, the cylinder is provided with a motion by which it may be turned back by hand, in case the cards are by any means working ahead of their correct position, as, for example, when the filling has run out and the loom run a pick or more without filling. Such a motion is shown in Fig. 17. Connected to the cylinder is the cylinder head, or lantern, g_3, which is acted on by a pawl k_1, pivoted at a point k_2, to a casting k_3 that is loosely pivoted at k_4. A spring k_6 throws the upper end of the casting k_3 to the left until the part k_6 that is attached to the pawl comes in contact with the supports of the cylinder. When, however, it is desired to turn back the cylinder, the cord k_7 is pulled down and thus pulls the casting k_3, together with the pawl k_1, to the right, and the pawl k_1 engaging with the lantern g_3 turns the cylinder. The position of these parts when the pawl k_1 is in contact with the lantern g_3 is shown by the dotted lines in Fig. 17.

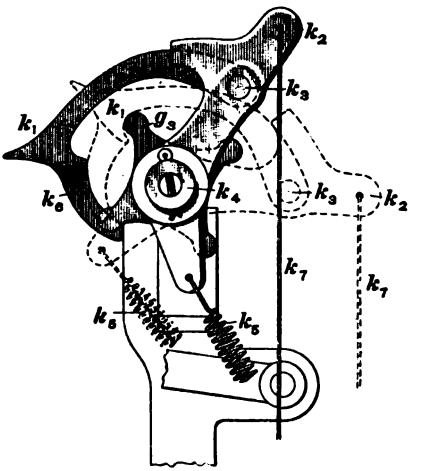

FIG. 17

21. Another type of reversing motion is shown in Figs. 12 and 13. In this case, when it is desired to turn the cylinder independently of the loom, the lower ends of the arms s_8, s_9 are pressed together, against the tension of the spring s_{10}, Fig. 13. When this is done, the arm s_9 will assume the position shown by the dotted lines, thus moving the plate s_{11} to the left and disengaging the projection s_5 from the slot in the segment casting s_4. Then by drawing the lower ends of the arms s_8, s_9 first to the right and then to the left the shaft s_1 will be turned, thus operating the cylinder g, Fig. 12. This action alone turns the cylinder in the same direction that it is turned while

Digitized by Google

the loom is running, but in case it is desired to reverse the motion of the cylinder, the cord k_7 is drawn down, which raises the pawl k_1 into contact with the lantern g_3 of the cylinder g. At the same time that the pawl k_1 is raised, a rod k_3 that rests on the pawl k_1 will be brought into contact with the pawl g_2, raising it out of contact with the cylinder; consequently, if the handle formed by the arms s_2, s_3, Fig. 13, is moved when the pawls are in this position, the cylinder will be turned in the opposite direction to that in which it moves when the machine is running. It is not advisable at any time, under ordinary conditions, to turn the loom backwards.

22. Card Cradles.—Owing to the large number of cards necessary on the jacquard machine, considerable strain would be brought on the cylinder if it were obliged to sustain their entire weight. It is also even more important that some provision should be made for assembling and keeping the bulk of the cards in a convenient position so that they may be taken by the cylinder in proper rotation and presented to the needles.

In order to accomplish this to the best advantage, a **card cradle** similar to that shown in Fig. 18 is generally used. The cards as they fall from the cylinder g pass over a roll l_2 and then between the beams l_3, l_4 on which the jacquard machine is placed. Attached to these beams are two curved iron rods l, l_1 so adjusted that the distance between them is only very slightly in excess of the length of a card. Wires l_4 slightly longer than the cards are attached to the set of cards at regular intervals, generally a wire at about every fourteenth, sixteenth, or twentieth card. After the cards pass over the roll l_2, they fall between l and l_1; but when a wire reaches these rods its ends rest on them, thereby supporting the cards. As the cards are taken by the cylinder, the wires l_4 pass beyond the rods l, l_1, the cards passing over the roll l_2 to the cylinder g.

23. The pegs g_1, Fig. 2, inserted in the cylinder so as to pass through the peg holes in the card and thus insure its occupying the correct position, are sometimes permanently

Digitized by Google

fastened to the cylinder; but since in such cases it is impossible to adjust them so that the holes in the card will correspond exactly to the holes in the cylinder, this practice is not to be recommended. They should rather be attached

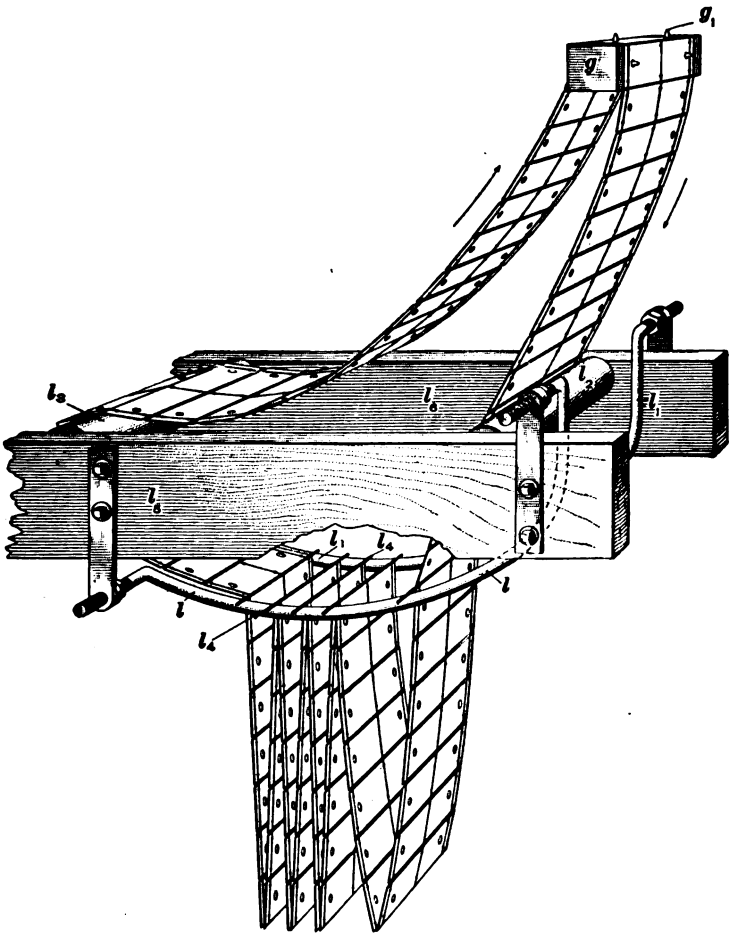

FIG. 18

to a socket or plate, set into the cylinder, in such a manner that they may be adjusted to meet the requirements of the cards.

Digitized by Google

Owing to the speed at which the cylinder of a jacquard rotates, and because of its somewhat irregular, or jerky, movement, certain appliances are added for the purpose of keeping the cards in place on the cylinder. Referring to Fig. 2, as the cards are brought up to the cylinder they pass beneath a roll i_7 and two springs i_2, i_3. These springs are so bent as to press each new card on to the cylinder so that its peg holes will engage the pegs g_1 and be pushed down on them instead of riding on the top of the pegs, as they would otherwise be liable to do. In addition to the pegs g_1 for keeping the cards in place on the cylinder, two springs i, i_1 are also provided for the purpose of pressing the card firmly in place on the face of the cylinder as the latter is brought in to the needles.

Some device must also be provided so that the cards will be positively removed from the cylinder after they have been presented to the needles, since otherwise they would be liable to stick on the pegs and be wound around the cylinder. One such device is shown in Fig. 2, and consists of two bands i_5, i_6 running around the cylinder and around two loose whorls i_4, i_8. As the cylinder rotates, these bands force the card to leave the pegs and fall into the cradle.

RISE-AND-FALL MOTION

24. Disadvantage of Single-Lift Jacquard.—One of the disadvantages of the ordinary single-lift jacquard is that all the warp yarn must be brought level at the bottom of the shed before the next shed can be formed. This necessitates considerable loss of time, and as a result the loom must be run at a much slower speed than is possible with open shedding. Various attempts have been made to overcome this defect, and at the present time many machines are made that claim to overcome this fault.

25. The **rise-and-fall motion**, Fig. 19, is frequently applied to jacquard machines for this purpose. When the hooks are not raised by the griff, they are supported by the grating b, Fig. 3, through which the lower ends of the hooks

Digitized by Google

pass. The object of the rise-and-fall motion is to lower this grating at the same time that the griff is raised, and vice versa, thus producing a *split shed*, since the yarn becomes level at the center of the shed. Referring to Fig. 19, the griff *c* is raised and lowered by the connecting-rod m_1, which is attached to the lever *m*; the rod c_1 is connected to the

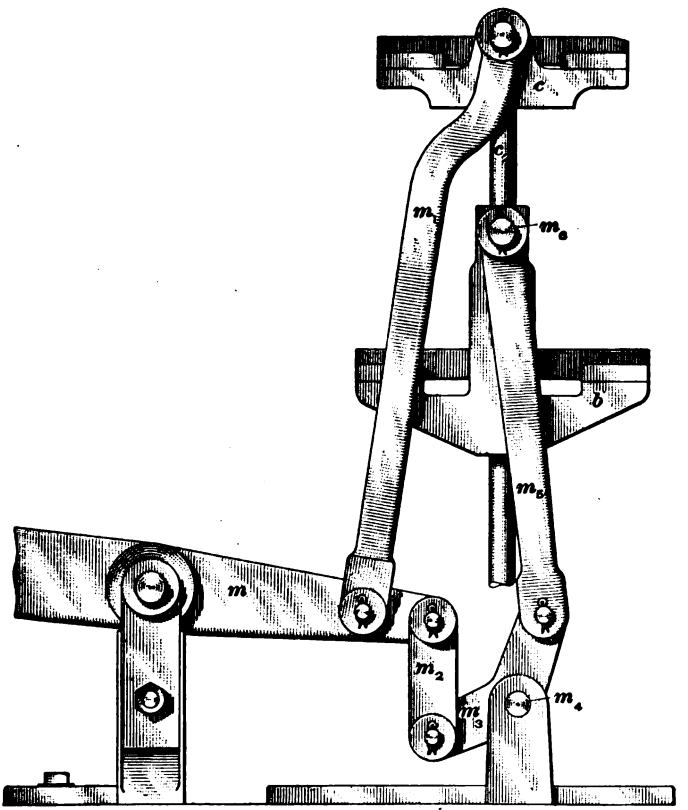

FIG. 19

griff *c*, and consequently rises and falls with it. The action of these parts is very similar to the action of the griff in the ordinary single-lift machine. In this machine, however, the grating *b*, Fig. 19, instead of being stationary, slides on the rod c_1, motion being imparted to it by the rod m_5, which

Digitized by Google

is acted on by the elbow lever m_4 attached to the lever m by means of the connection m_3. The connections from the lever m to the griff c and grating b are therefore such that as the griff is raised the grating will be lowered; while, on the other hand, as the griff is lowered the grating will be raised. Thus the hooks that are caught by the griff will be lifted as the griff is raised, while the other hooks will be lowered, through the action of the grating.

This motion has found considerable favor and is easier on the yarn than the ordinary single-lift machine, since in forming a shed the yarn passes through only half the distance that is necessary with a single-lift machine.

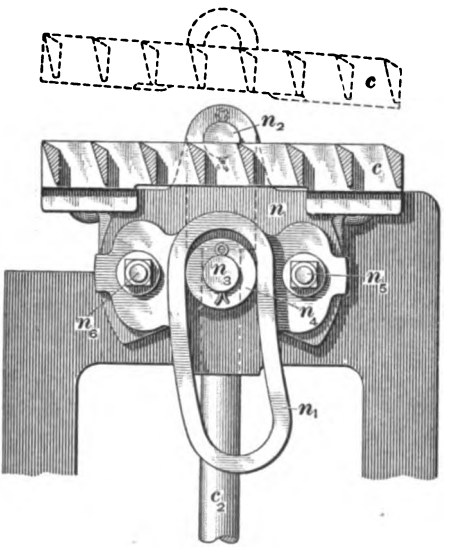

FIG. 20

26. Angular-Shed Motion.—To the rise-and-fall jacquard machine, there is sometimes attached a motion known as the **angular-shed motion,** shown in Fig. 20. Its object is to raise the hooks at the back of the machine higher than those nearer the front. As the mail eyes in the harness lines controlled by the rear hooks are farther from the cloth being woven than the mail eyes connected with the front hooks, the additional lift given to the rear mail eyes provides a means of keeping the warp ends in the top shed in the same plane when lifted. The griff c, instead of being firmly attached to the lifting rod c_2, swings on a stud n_2 that is carried by the rod c_2. Connected to the griff c is a casting n that carries a loop n_1 in which works a bowl n_4 carried by a stud n_5. The bowl n_4 and stud n_5 are of course

Digitized by Google

stationary, being attached to the frame of the machine, while the casting n and collar n_1 rise and fall with the griff c. Owing to the shape of the collar n_1, as the griff is raised it will be turned slightly on the stud n_2, the position that it assumes when up being shown by the dotted lines in Fig. 20. In this manner the knives at the back of the griff are given a greater lift than those at the front. The nuts n_3, n_4, Fig. 20, are simply adjusting nuts, by means of which the griff c may be given its correct position.

DOUBLE-LIFT JACQUARDS

DOUBLE-LIFT SINGLE-CYLINDER JACQUARD

27. The Griffs.—The construction of a **double-lift jacquard** is such as does not necessitate all the warp yarn being brought level before commencing to form a new shed. In order to accomplish this, two griffs are employed, one

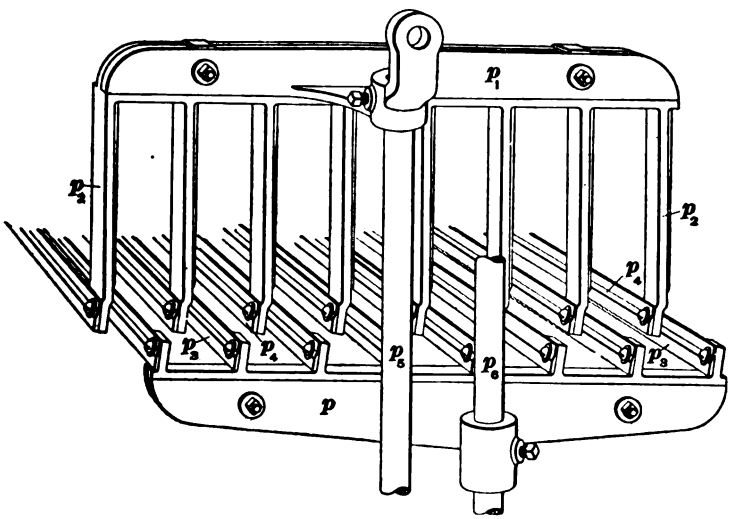

FIG. 21

being raised on one pick and the other on the next pick. The manner of arranging this part of the machine is shown in Fig. 21, in which p is the framework of one griff and p_1 the

Digitized by Google

framework of the other. The griff knives p_3 are fastened directly to the framework p, while the knives p_4 are fastened to arms p_5 that extend from the framework p_1. This method of connecting the griff knives is adopted in order to allow them to pass each other, as is necessary when one set of knives is raised and the other lowered. The arms p_5 must be long enough to allow the two griffs to pass each other sufficiently to form the desired size of shed without having the knives of the griff p come in contact with the framework of the griff p_1. The rods p_6, p_6, Fig. 21, which are duplicated on the other side of the machine, are slide rods to keep the two griffs steady when rising and falling.

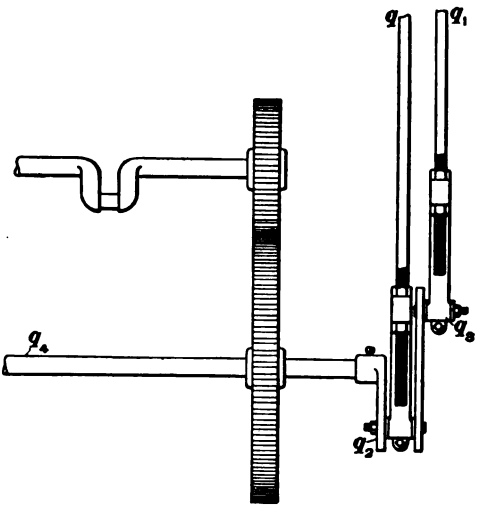

FIG. 22

The griffs are raised and lowered by means of two levers placed side by side, each of which is very similar to the lever that actuates the griff of a single-cylinder jacquard. These levers receive their motion from two rods q, q_1, Fig. 22, that are connected to a double crank q_2, q_3. The crank is fastened to the end of the camshaft q_4 of the loom; consequently, it makes one complete revolution while the loom is making two picks, the rod q lifting one griff on one pick and the rod q_1 lifting the other griff on the next pick.

28. The Hooks and Needles.—As it is often desired to raise certain ends on two or more successive picks, a different arrangement of hooks from that described must be adopted in a double-lift jacquard, since with this machine if

Digitized by Google

a hook is raised on one pick, it must necessarily drop with its griff and lower the ends controlled by it on the next pick. To obviate this difficulty, two hooks are used in a double-lift

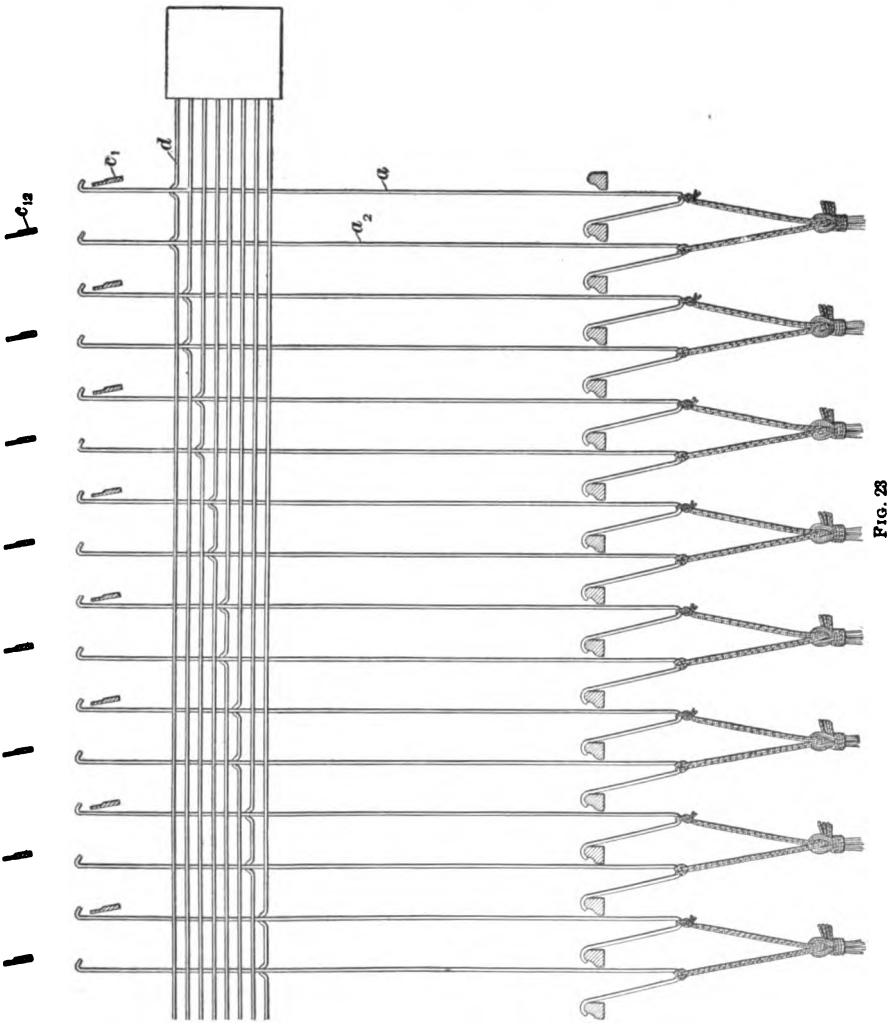

FIG. 23

machine, each controlling the same ends as one hook in a single-lift jacquard and being operated by one needle in the

Digitized by Google

case of a single-cylinder double-lift machine; consequently, in a double-lift single-cylinder machine there are twice as many hooks as in a single-lift jacquard of the same capacity, although the number of needles is the same in both instances. The arrangement of the needles and hooks and also the neck cords of a double-lift single-cylinder jacquard is shown in Fig. 23.

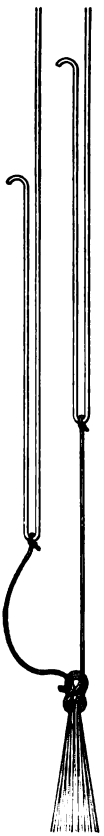

FIG. 24

Since each alternate hook is controlled by one griff while the remaining hooks are controlled by the other griff, and since the action of the two hooks is governed by a single needle, the ends controlled by these hooks may be raised on any pick as desired, regardless of which griff is raised. For example, consider the ends operated by the two hooks a, a_1, Fig. 23, which are controlled by the needle d. The hook a is raised when desired by the griff blade c_1, while the hook a_1 is raised by the blade c_{11}. If the blade c_1 is down and there is a hole in the pattern card to allow the needle d to pass through, the hook a and, consequently, the ends that it controls will be raised when the griff is lifted. On the other hand, if the blade c_{11} is down and a hole in the pattern card for the next pick comes opposite needle d and allows it to pass through, the hook a_1 will be caught and raised by this blade, and the same ends will be again lifted.

29. The Neck Cord.—Fig. 24 illustrates one manner in which the neck cords are attached to the harness lines on a double-lift jacquard. The neck cord shown in this illustration consists of two parts, one part being attached to one hook and the other part attached to the other hook of the pair that controls the same harness lines. When one hook is raised by its griff, the neck cord attached to that hook will, of course, become tight, while the neck cord attached to the other hook will become slack. This position is shown in Fig. 24. When both hooks are down, both neck cords become tight.

Digitized by Google

Another method of connecting the neck cord to the hooks is shown in Fig. 25. In this case only one neck cord is necessary, it being connected to the harness lines in the usual manner, and also to a small metallic-link arrangement that is free to slide on the lower bends of the hooks. As one hook is raised this link will slide up on the other hook, which will of course remain down, thus allowing the neck cord to be lifted by the hook that is raised without interference on the part of the other hook. With this arrangement a hook is raised slightly before it starts to lift the harness lines, since there is a slight loss of motion due to the turning of the link arrangement on the hook that is down.

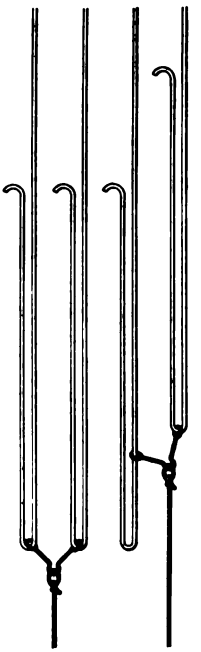

FIG. 25

A double-lift jacquard does not form a true open shed, but what is known as a **compound shed.** As shown in Figs. 23 and 24, if the same harnesses are to be lifted on two consecutive picks, the neck cord attached to the hook that is raised on the first pick will drop to the center of the shed before the neck cord that is to lift the harness on the second pick becomes tight; consequently, in this form of shedding there exists a stationary bottom shed, but at every pick the top shed is lowered to the center and those harnesses that were raised on the previous pick and that are required to be raised on the next pick are again lifted to the top, while those that are required to be down on the next pick continue their movement to the bottom shed. A similar action occurs with the link arrangement shown in Fig. 25 as when two neck cords are used.

30. Before the style of griff shown in Fig. 21 was adopted, the hooks of a double-lift jacquard were made in two lengths and one griff worked above the other, instead of the knives of one griff passing through the other as is done

Digitized by Google

at present; this arrangement is shown in Fig. 26. With this motion, the vibration of the long hooks was so great that in many cases they were caught up by the knives when they were intended to remain down and, consequently, they were discarded for the shorter hooks, which are much more certain in their action.

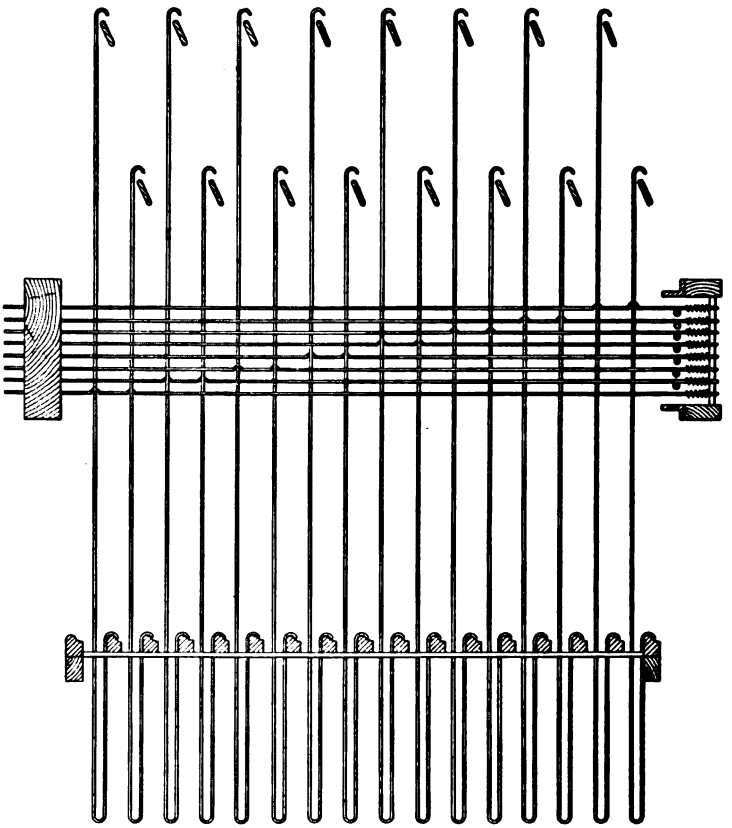

FIG. 26

31. Since in a double-lift single-cylinder jacquard one needle operates two hooks, when the needle is pushed back by the cylinder one of these hooks is liable to be held by the griff blade while the other is perfectly free to move. For

Digitized by Google

instance, if the harness controlled by the hook a_2, shown raised in Fig. 27, is to remain down on the next pick, the pattern card will press back the hook a_1 by means of the needle, in order that it may escape the griff blade c_1 when it starts to lift. Since the hook a_2 is still on its griff blade c_{12} and is also being pushed back by the needle, considerable strain will be brought on the needle and hook unless some escapement device is provided.

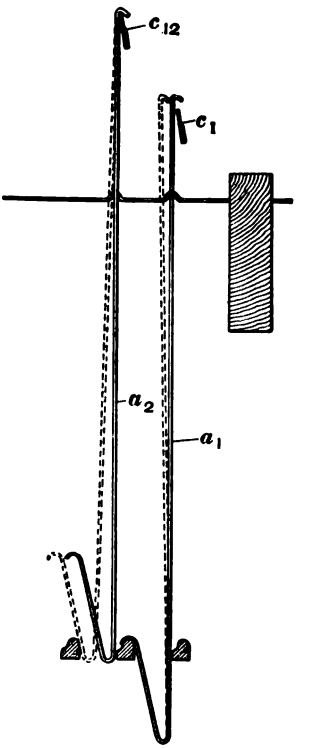

FIG. 27

This difficulty is overcome by making the bottom part of the hook V shape and having the opening in the grate through which it passes large enough for its widest part. This part rests in the grate when the hook is down and, consequently, when the hook is raised, there is considerable unoccupied space in the slot, which allows the hook to be pushed back by its needle without bringing any strain on it, as shown by the dotted lines in Fig. 27.

32. Speed.—Double-lift single-cylinder jacquards can be run at a much higher rate of speed than single-lift machines, since the shed can be formed in much less time. One difficulty, however, is the speed at which the cylinder must move in and out in order to meet the requirements of the increased speed. For illustration, suppose that a double-lift single-cylinder jacquard is run at twice the speed of a single-lift machine (this speed is excessive but will serve to illustrate the point); the griffs in both cases will have the same speed, but the cylinder in the former case must attain twice the speed that it has in the latter case, since it must

Digitized by Google

operate the needles for each griff. This increased speed of the cylinder tends to cause the cards to jump off the cylinder pegs, besides increasing the wear on the different parts; in order to overcome this defect two cylinders are sometimes applied to double-lift machines.

DOUBLE-LIFT DOUBLE-CYLINDER JACQUARDS

33. The arrangement of the hooks, needles, spring boxes, and needle boards in a machine that employs two cylinders is shown in Fig. 28. With this arrangement there are double the number of hooks and also double the number of needles that there are in a single-lift machine. The cylinders are placed one at each side of the machine, the griff blades of the two griffs being inclined in opposite directions and the two sets of hooks that are operated by these two griffs having their points turned in a suitable manner to meet the requirements of the position of the blades.

In this machine, the hooks are controlled by the needles in exactly the same manner as in a single-lift machine, but since there are two sets of hooks, two griffs, two banks of needles, and two cylinders, one cylinder will act on one set of needles and hooks on one pick, and the other cylinder will act on the other set of needles and hooks on the next pick. It is therefore necessary to have a card on one cylinder cut in a suitable manner for one pick, while a card on the other cylinder will serve for the next pick. To illustrate this point more fully, suppose that on the first pick of the weave the cylinder on the right is brought against the needle board; then if the holes are cut in this card correctly, the desired hooks will be lifted by the griff operating this set of hooks, and those ends that should be up on this pick will be raised, while the others will remain down. On the next pick the cylinder at the left will be brought against the needle board and the card will operate the needles in such a manner as to lift the ends correctly. Since the first, third, fifth, seventh, ninth, eleventh, thirteenth, and fifteenth hooks operate the same ends, respectively, as the second, fourth, sixth, eighth,

Digitized by Google

tenth, twelfth, fourteenth, and sixteenth, it is possible for either cylinder to control every end in the warp.

When the cylinder at the left is pressing against the needle board, the griff that operates the hooks controlled by this set of needles must, of course, be down ready to engage with

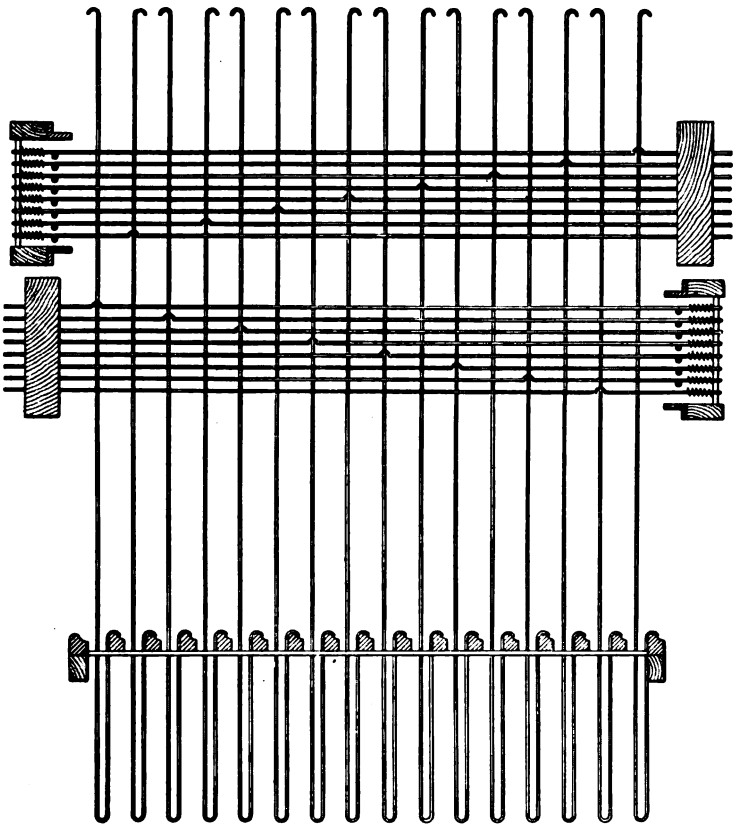

FIG. 28

the hooks that are to be lifted on that pick. On the other hand, when the cylinder at the right is pressing against the needle board, the griff that operates the hooks controlled by this set of needles must be down. The griffs of a double-lift double-cylinder jacquard operate in exactly the same manner

Digitized by Google

as those of a double-lift single-cylinder machine and, consequently, one griff lifts the hooks on one pick and the other griff lifts the hooks on the next pick. Since in this machine there is one cylinder for each griff, it is necessary for the cylinders to travel at only half the speed of the cylinder on a double-lift single-cylinder jacquard. This is the chief advantage of this style of construction.

34. A difficulty that must be contended with when weaving on a double-lift double-cylinder jacquard is the liability of one cylinder getting ahead of the other. Since the first card on one cylinder operates the hooks on the first pick and the first card on the other cylinder operates the hooks on the next pick, this alternate use of the cylinders being continued throughout all the cards on both cylinders, if a card on one of the cylinders is skipped (which is spoken of as one cylinder getting ahead of the other), the cards will not be brought against the needle boards in proper rotation, and the warp ends will not be raised and lowered correctly to form the desired weave. This is the principal drawback to a double-cylinder machine, and by some manufacturers is considered of so much importance that they prefer the single-cylinder to the double, notwithstanding the high speed at which the cylinder must run when it is necessary to operate the needles for two griffs.

FIXING AND SETTING JACQUARDS

FILLING SKIPPING

35. Jacquard machines, like all other weaving mechanisms, require constant attention to keep them in perfect working order, and they are also liable to certain defects that do not occur with other shedding arrangements. One of the principal difficulties is known as **filling, or shuttle, skipping,** or **flying over,** the terms meaning that the shuttle in passing from one box to another passes over a number of ends in each repeat of the pattern that it should have passed

Digitized by Google

under, each pattern in the width of the cloth showing exactly the same defect. There are many causes of shuttle skipping, one of the most important being that one or both of the peg holes is enlarged by the card being broken or worn, so that it is not held in the correct position on the cylinder. In this case some of the needles that should remain undisturbed are pushed back, because the holes in the cylinder are partially covered by the card; consequently, some of the hooks that should be lifted by the griff are pressed away from the knives and remain down, thus causing the ends that are operated by such hooks to remain in the lower shed instead of being raised so as to allow the shuttle to pass under them.

The peg holes are often broken by the cards having an irregular movement given them by the cylinder, which causes them to jump so that they do not engage with the pegs properly as they are taken by the cylinder. Broken peg holes are also caused by a broken lacing. In this case, when the cylinder is turned, the cards rest on it in whatever position they happen to be. If the lacing is very slack, this is liable to occur, even if it is not actually broken. If one of the springs that presses the card on the cylinder becomes broken, the card slides away from the cylinder slightly on the peg, owing to the latter being tapered, and when the card comes against the needles the peg hole is liable to be enlarged as the card is forced back close to the cylinder again. Sometimes the wires that are placed in the set of cards to hold them in the cradle will drop between the bars of the cradle and become caught so that as the cylinder takes the cards a great strain is brought on them. This will often draw the cards off the cylinder pegs, and when the cylinder moves in to the needle board the card is broken by the peg. If any of the cylinder pegs are loose, it is very evident that they are liable to be displaced and break the cards. Sometimes, also, the blades of the griff are not set close enough to the hooks, which of course causes the griff to miss them when they should be caught and raised. Often the cards of a set will not be uniform because they have been cut on different machines or because new and old cards are used in

Digitized by Google

the same set. This will often cause certain cards to partially cover the holes in the cylinder and thus push the needles back so that the hooks will miss the griff. Sometimes the needle board will become loose and drop out of place slightly, thus causing the needles to bind so that they will not return the hook into position to be raised.

HOOKS MISSING, OR STITCHING

36. The defect known as **stitching**, or **hooks missing**, results when one or more hooks fail to be engaged and raised by the griff when they should. The effect of this in the cloth is that the ends controlled by those hooks remain down, when in reality they should be raised. This is somewhat similar to shuttle skipping, but in the latter case, usually a number of hooks fail to be caught by the griff, whereas stitching is generally the effect of only one or a few hooks failing to work properly.

There are a number of causes of this difficulty; one of the most important is that the needle operating the particular hook that is missing is bent so that when pressed back by the cylinder it binds in the needle board, and as the spring on that needle is of insufficient power to force it out again, the hook remains off the griff, and the warp ends controlled by it remain under the filling.

Sometimes the needle board becomes filled with gummy oil and dirt, so that the needles do not work freely in it, and are thus liable to be caught. Another cause is a broken needle spring. The spring also may be an old one and so worn that it is not strong enough to press back the needle. Sometimes stitching is caused by one of the pattern-card holes not being cleanly punched; thus, as the needle comes in contact with the card, the punched portion is forced into the hole of the cylinder, which will sometimes result in the needle being pressed back every time that side of the cylinder is brought in to the needles.

If a hook is bent back, it is liable to miss the griff and cause the ends controlled by it to weave under when they

Digitized by Google

should be raised. Whenever hooks that should be lifted are being left down, a good method of determining whether the needles are coming against the card at the correct position is to rub a little black oil over their points and then bring the cylinder against the needle board. The points of the needles when treated in this manner will mark the card, and by noticing the places at which these marks come it can readily be determined if any of the needles are not passing through their holes in the cards.

ENDS FLOATING ON FACE OF CLOTH

37. Ends floating on the face of the cloth is a defect caused by hooks being engaged by the griff and raised when they should remain down, thus resulting in the ends controlled by such hooks being raised, whereas in stitching the ends are lowered, since the hooks fail to be caught by the griff. This is sometimes caused by vibration of the hooks, and sometimes by the blades of the griff being set too close to the hooks.

Again, some part of the cylinder mechanism may be loose or may have slipped so that there is sufficient lost motion to result in the cylinder failing to press some of the hooks clear of the griff. If a hook is bent forwards, it will be caught by the griff and raised when it should remain down.

The grate may become loose and slip slightly out of place, which in the case of a double-lift double-cylinder machine will cause the hooks of alternate rows to be caught on the blades of the griff, while the hooks in the other rows will miss the griff and fail to be lifted.

Atmospheric conditions cause the harness lines to shrink or lengthen slightly; in the former case this causes ends to remain above the filling when they should be below, and vice versa in the latter case.

CROWNING HOOKS

38. When the griff in descending strikes the tops of the hooks, it bends them, i. e., crowns them. There are several causes of this. Sometimes the grate is not in the correct

Digitized by Google

position, and sometimes the griff itself is not set straight. Again, hooks may be crowned by the cylinder striking in too hard; this causes the hooks to vibrate, and in a double-lift machine, when the other griff descends, they will catch under the blade. Sometimes, also, the cylinder by coming in against the needles cornerwise will cause the hooks to be crowned.

TIMING THE GRIFF

39. The griffs of a jacquard correspond to the knives of a dobby or to the harness cams of a plain loom, and, consequently, making allowance for the difference of construction, the timing and setting is regulated by the same principles that apply to corresponding parts on other looms. When shedding by means of cams, it is possible to regulate to a certain extent the speed at which the harnesses rise and fall and in this manner bring as little strain as possible on the yarn. With jacquards, however, this is not possible, since there are numerous other motions to be considered that limit the time of forming the shed.

The shed produced by a jacquard should always be open when the crank-shaft of the loom reaches its top center, this being the point at which the loom commences to pick, and the shed should remain open until the shuttle has passed through. A good rule for setting this part of the jacquard machine is to have the shed closed when the crank-shaft is between its bottom and front centers, and opened to nearly its fullest extent when the crank-shaft reaches its top center.

Another method of setting the griff is to bring the lay up until it is about 1 inch from the fell of the cloth and then set the griff in such a manner that it will be at its lowest position, if the jacquard is a single-lift machine. This setting is for general work; if it is desired to produce cover on the cloth, the griff should be down when the lay is about $1\frac{1}{2}$ inches from the fell of the cloth. Whatever setting of the griff is made, the pick should be so regulated that the shed will be well opened by the time the shuttle enters it. The griff may be placed in any desired position by changing

Digitized by Google

the position of the eccentric operating the lever that raises and lowers it, or if this lever is operated by cranks, these may be turned on the shaft until the desired position of the griff is obtained. In setting the griffs of a double-lift jacquard the lay of the loom should first be placed in the desired position, as previously explained, and the knives of the griffs then adjusted so that they are level with, or just passing, each other.

When the knives of the griff are in their lowest positions, the upper curved parts of the hooks should be about $\frac{1}{4}$ inch above the knives. Those hooks that are to be lifted should have their upper curved parts directly over the griff knives, to insure their being caught by the knives when rising, while the hooks that are not to rise should be pressed back by the needles until they are about $\frac{3}{16}$ or $\frac{1}{4}$ inch away from the knives, and should be kept in this position until the latter have risen above the heads of the hooks. This last point—namely, keeping the hooks pressed back until the griff knives have risen above them—depends on the dwell given to the cylinder while against the needle board and, consequently, is more closely connected with the action of the cylinder.

TIMING AND SETTING THE CYLINDER

40. In timing the cylinder, two points should receive careful attention: (1) The cylinder should not be brought against the needle board until the griff knives in descending have passed below the heads of the hooks; otherwise, the needles controlling those hooks that are on the descending knives but are not required to be lifted on the next pick are liable to puncture the cards, since there are no holes punched at the points where they strike the cards. (2) The cylinder should have sufficient dwell when against the needle board to insure the knives of the griff being lifted above the heads of the hooks before the pressure of the card against the needles is removed. If the cylinder should start to leave the needle board before the knives were above the heads of the hooks, some of the hooks that should remain down might be caught and lifted by the griff.

Digitized by Google

The tops of the hooks of the row nearest the needle board are not pushed back by the cylinder as far as those hooks farther from it, and therefore the former are much more liable to be caught by the blades of the griff when they should remain down. The reason for this is illustrated in Fig. 29, which shows one row of needles and the hooks to which they are connected. The top needle d_1 controls the front hook a_5, while the bottom needle d_2 controls the back hook a_6. The distance x from the top of the hook a_5 to the point where the needle d_1 is connected to it is less than the distance y from the top of the hook a_6 to the point where the needle d_2 is connected; consequently, as the cylinder presses both d_1 and d_2 back equally, the top of the hook a_6 will be moved a greater distance than the top of the hook a_5, and thus will not be so apt to catch on the griff when it should remain down.

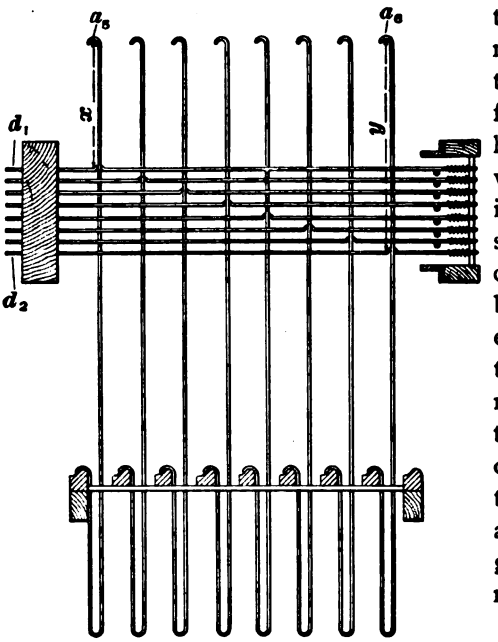

FIG. 29

With an independent cylinder motion, the cylinder can be timed with reference to the griff independent of the movement of the latter, so as to bring the cylinder against the needles at the exact time desired. This is accomplished by altering the position of the eccentric, or crank, that actuates the cylinder.

With self-acting motions, in which the cylinder is actuated by the rise and fall of the griff, the position of the cylinder will of course be directly dependent on the position of the

Digitized by Google

griff. The relative position, however, of the cylinder when brought against the needle board may be regulated by means of the adjustable rod j_1, Fig. 15. With self-acting motions, such as that shown in Fig. 14, this position of the cylinder may be regulated by adjusting the swanneck j on the rod j_1. If the cylinder is brought against the needle board in time for the card to make the proper selection of the hooks, and remains in this position until the knives of the griff have risen slightly above the heads of the hooks, there should be no difficulty with these different parts.

41. When setting the different parts of the cylinder motion, the pawl that turns the cylinder should be in a correct position to give to it a full quarter-turn; otherwise, the cylinder is liable to be brought against the needle board cornerwise, which is sure to result in a mispick, and possible bending of the needles. This is also liable to cause the hooks to be bent, since if the cylinder comes in cornerwise, it reaches the needles sooner and thus moves some of the hooks before the griff reaches its lowest position; the griff is therefore liable to come down on top of these hooks and bend them. The timing of the rotary motion of the cylinder may be regulated by changing the position of the pawl. If the pawl is so set that the cylinder will start to turn too soon, the cards are liable to catch on the needles and be torn by them as the corner of the cylinder passes; if the pawl is set too far from the frame of the machine, the cylinder is liable to be given only a partial movement. The cylinder may be made to move farther from the needle board as it travels out, thus insuring a complete movement being given it by the pawl, but the farther the cylinder is made to travel from the needle board, the faster it must move, and this is a disadvantage. To further insure a complete movement of the cylinder so that it will be brought squarely against the needle board, a safety pawl g_1, Fig. 2, is added to most jacquard machines. This safety pawl is so set that in case the cylinder is only partly moved it will strike against the pawl and, since the pawl cannot move inwards, the cylinder

Digitized by Google

must be pushed over, thus preventing the corner of the cylinder striking the needles.

The cylinder must also be adjusted in such a manner that the needles will pass directly through the centers of the holes in the cylinder when it is brought against the needle board. For this purpose provision is made for raising the whole cylinder gate if a vertical adjustment is required, but horizontal adjustments are made by moving the cylinder itself, either to the right or left, as required.

42. Jacquard machines are made with a widely varying number of hooks and needles. Table I shows the standard sizes of these machines.

TABLE I

Size of Machine	Hooks in Short Row	Hooks in Long Row
200	8	26
300	8	39
400	8	51
400	8	52
800	8	104
500	10	52
1,000	10	104
300	12	26
600	12	52
900	12	78
1,200	12	104
1,800	12	156

In each of the above machines it will be noticed that the total number of hooks obtained by multiplying the number of hooks in the short row by the number of hooks in the long row is larger than the number given under the size of the machine. These additional hooks are found on all jacquard machines and are usually employed in weaving borders and selvages or left idle.

Digitized by Google

JACQUARDS

(PART 2)

HARNESS TYING

INTRODUCTION

1. The jacquard machine is placed at a considerable height (usually about 5 or 6 feet) above the warp in the loom, the connections between its hooks and the ends of the warp being made by means of the *jacquard harness*. Each eye through which an end of warp passes is connected, in the case of a single-lift jacquard, to one hook of the machine, or, in a double-lift jacquard, to two hooks; this does not mean, however, that each hook, in the case of a single-lift machine (or each pair of hooks, in a double-lift machine), operates only one end of warp, for the harness lines controlling either one or several ends may be attached to each neck cord.

The name **harness tying** is usually applied not merely to the actual operation of tying the various threads that form the harness, but to the subject generally, which involves, in addition to the actual making of the connections, everything relating thereto, including, principally: (1) the position of the jacquard machine over the loom; (2) the method of numbering the hooks in the machine; (3) the order in which the individual harness lines from the various hooks or groups of hooks should be connected to the warp threads; (4) the various plans and calculations that must be made in preparation for tying up, and a number of minor details as to the

For notice of copyright, see page immediately following the title page

Digitized by Google

methods of making various connections, building and preparing the harness, etc.

Although jacquard machines in themselves do not differ greatly, the methods of harness tying vary considerably, and it is essential that a thorough understanding of the fundamental principles should be obtained, after which it is comparatively easy to understand the different methods that are found, in practice, to provide the best means for manufacturing various kinds of jacquard fabrics.

In considering these various points it should be remembered that a jacquard machine is used to produce fabrics with relatively extensive patterns, involving a large number of ends that interlace differently. There may be only one repeat of the pattern in the width of the fabric; in other words, every end may be controlled by a separate hook and interweave differently from every other end. Since in a double-lift jacquard two hooks are used to operate one neck cord and the harness lines attached to it, and thus have the same function as one hook in a single-lift machine, when it is stated that harness lines are connected to one hook this will be understood to mean that they are connected to one hook in the case of a single-lift machine, but in a double-lift machine to the two hooks operating one neck cord.

In case there is only one repeat of the pattern in the width of the fabric, the number of ends in the warp cannot exceed the number of hooks in the machine, since the number of different interlacings cannot exceed the number of hooks. Patterns of this kind are usually found only in narrow fabrics; it is much more common to have several repeats of the pattern in the width of the fabric. If, for example, the body of the warp contains 3,200 ends, the cloth is 40 inches wide inside selvages, and each repeat occupies 5 inches, there will be 8 repeats of the pattern in the width of the cloth. If only 1 end were controlled by each hook, a 400-hook jacquard would operate only 400 ends, and would therefore weave a piece of this cloth only 5 inches wide; but by tying 8 harness lines to the neck cord attached to each hook, selecting those harness lines that control corresponding ends in each repeat

Digitized by Google

of the pattern, i. e., that interlace in a similar manner with the filling, a 400-hook machine will weave a piece of cloth 40 inches wide containing 3,200 ends and 8 repeats of the pattern in the width of the cloth. This provides for an imaginary division of the harness, each division being complete on 400 ends or harness lines; such an arrangement of the harness is spoken of as an *eight-division harness.*

If the same machine is used to weave cloth 40 inches wide with a warp of 2,000 ends, a pattern 8 inches in width with 5 repeats in the width of the cloth will result, and 5 harness lines will be controlled by each hook; this arrangement is spoken of as a *five-division harness.* Thus are obtained the names *five-division*, *six-division*, *eight-division* harnesses, etc.

2. Methods of Supporting Jacquards. — Jacquard machines are usually supported above the loom by two wooden beams placed parallel to each other and far enough apart to support each side frame of the jacquard. In Fig. 1, one of these beams l_6 and a portion l_7 of the frame of the

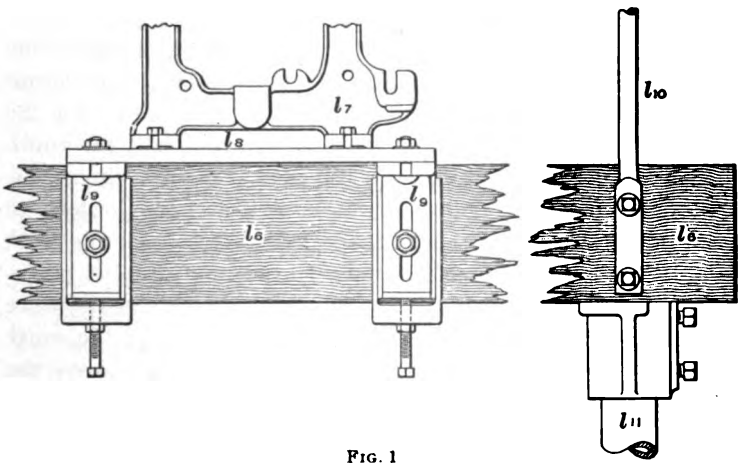

FIG. 1

jacquard are shown. A cross-piece l_6 to which the jacquard is bolted is secured to brackets l_9, which are adjustably supported on the beam l_6. By raising or lowering the brackets l_9 the jacquard may be leveled, which is very essential to its

Digitized by Google

proper working, or it may be adjusted so as to raise or lower the warp line. The beams l_8 may be supported either by the loom itself or by columns or pillars l_{11}, usually made of iron pipe, that fit into sockets secured to the floor of the room and carry brackets, on which the beams rest. Braces l_{10} are also attached to the beams and to the ceiling of the room, thus reducing the vibration to a minimum, and giving a firm support for the jacquard machine entirely independent of the loom. This is preferable to supporting the machine from the loom itself, as in the latter case the vibration of the loom is communicated to the jacquard. Sometimes when a large number of jacquards are used in one room, a framework of iron girders is built, supported from the columns that support the roof or floor timbers; this makes an excellent foundation for the jacquard machines.

A jacquard machine should be placed in a position directly above the center of the *comber board* (see Art. 4) through which the harness lines are passed. This position can be determined by tying a plumb-line to a hook as near the center of the jacquard as possible, and so placing the machine that this line will fall directly to a corresponding point at the center of the comber board. In case the comber board is not in the loom, the plumb-line should fall to a point on the center line of the loom and about 1 inch plus half the width of the comber board back from the reed cap when the crankshaft of the loom is on its back center. The object of bringing the center of the jacquard machine so near the front of the loom is to reduce, as much as possible, the lift necessary to produce the size of shed required for the shuttle, since any extra lift is detrimental to the good weaving of the warp. The object of having the center of the machine above the central holes of the comber board is to prevent an unequal lift of warp at the sides of the loom.

3. The Harness.—One portion of the harness of a jacquard is shown in Fig. 2; a_3 is the neck cord, which is attached to the hook a of the jacquard. Fastened to the lower end of the neck cord are the harness lines a_7, there

Digitized by Google

FIG. 2

being as many of these lines attached to each neck cord as there are repeats of the weave in the width of the cloth. In this figure 8 harness lines are shown attached to the neck cord; this is a suitable arrangement, if a repeat of the weave occupies 400 ends, and there are 3,200 ends in the entire width of the body of the warp; it gives 8 repeats of the pattern in the width of the cloth. Each hook of the jacquard will therefore control 8 harness lines, one from each division of the harness, and 8 corresponding warp threads, each in a corresponding position in each pattern of the cloth. The zigzag lines a_4, shown in the portion of the harness marked a_7, indicate where the 8 harness lines are stitched together. This stitching is for the purpose of uniting the harness lines into one bunch, so that as they are raised and lowered the separate lines will not catch and ride on the knots made by tying the other harness lines to their respective neck cords.

The harness lines are threaded through the comber board and support the couplings, which consist of the top loop, or sleeper, a_8, Fig. 2, the mail a_9, the bottom loop, or hanger, a_{10}, and the lingoe a_{11}.

4. **The Comber Board.**—The **comber board** is a long, narrow, perforated board extending from one side of the loom to the other a few inches above the lay and about 1 inch back from the reed cap when the crank-shaft is on its back center. The object of the comber board is to spread the harness lines, one harness line passing through each hole of the board. It also determines the ends per inch in the cloth, since the number of warp ends to each inch of the reed must correspond to the number of holes to the inch in the comber board. There are the same number of holes in the width of the board as there are hooks in the short row of the jacquard being used, while the number of holes in the length of the board depends on the ends per inch in the cloth being woven. For example,

Digitized by Google

if the jacquard machine contains 8 hooks in its short row, there will be 8 holes in the short row of holes in the comber board, while if the reed contains 80 ends to the inch, there will be 10 holes in each inch of the long row, thus giving 80 holes in the comber board for each inch lengthwise.

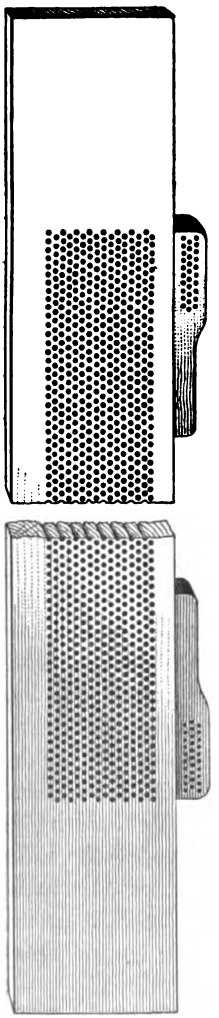

FIG. 3

Comber boards are made in various ways, but for ordinary classes of goods there are two principal varieties—the *solid* and *slips*. A **solid comber board** is shown in Fig. 3. It is usually about $\frac{3}{4}$ inch thick and long enough to rest on brackets screwed to the side frames of the loom. The small pieces shown screwed to the front of the comber board in Fig. 3 carry the harness lines controlling the selvage ends and may be moved to various positions along the board, so that different-width goods may be woven by leaving a portion of the harness at each side without any ends drawn through it. Comber boards should be made of some hard wood, such as beech, maple, or sycamore, and should be well seasoned in order to prevent their splitting.

Fig. 4 shows the style of comber board termed **slips**, the name being derived from the fact that it is built up of small pieces w_1, w_2, w_4, from 2 to 3 inches long, which are set in grooved back and front pieces w, w_1. The principal advantage of this comber board over that shown in Fig. 3 is that the ends per inch in the cloth can be reduced without altering the number of hooks to be used in weaving the design; whereas, with the solid comber board, if the ends per inch in the cloth is reduced, the

Digitized by Google

number of hooks on which to build the pattern must also be reduced. With slips, the ends per inch in the cloth is reduced by placing small pieces of wood between the slips, so as to spread them. This applies to only very slight changes in the ends per inch of the goods, since if the slips are separated to

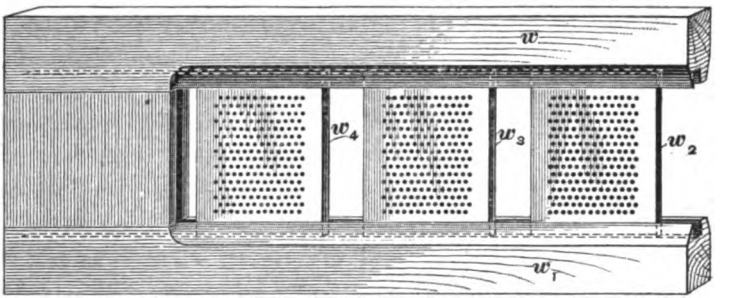

FIG. 4

any great extent, the angle of the harness lines will be altered and an uneven shed produced. It will be noted that this alters the width of the goods in the same proportion as the ends per inch of the cloth is changed.

STYLES OF HARNESS TIES

5. Straight, or Norwich, Tie.—Although there are a number of methods of connecting the harness lines to the hooks of the jacquard machine, all may be divided into two general classes: the *straight*, or *Norwich*, tie and the *cross*, or *London*, tie. When the jacquard machine is placed over the loom in such a position that the cylinder is directly over either the warp or the cloth being woven, that is, when it faces the front or back of the loom, the harnesses are said to have a **straight tie**, since in this case the long rows of hooks in the machine are parallel with the long rows of holes in the comber board. Fig. 5 shows the jacquard machine so placed, a complete short row of hooks being shown, but only a few in one of the long rows. The comber board, together with the harness lines from the first short row of hooks, is also shown in this figure, in order to illustrate the manner of passing the

Digitized by Google

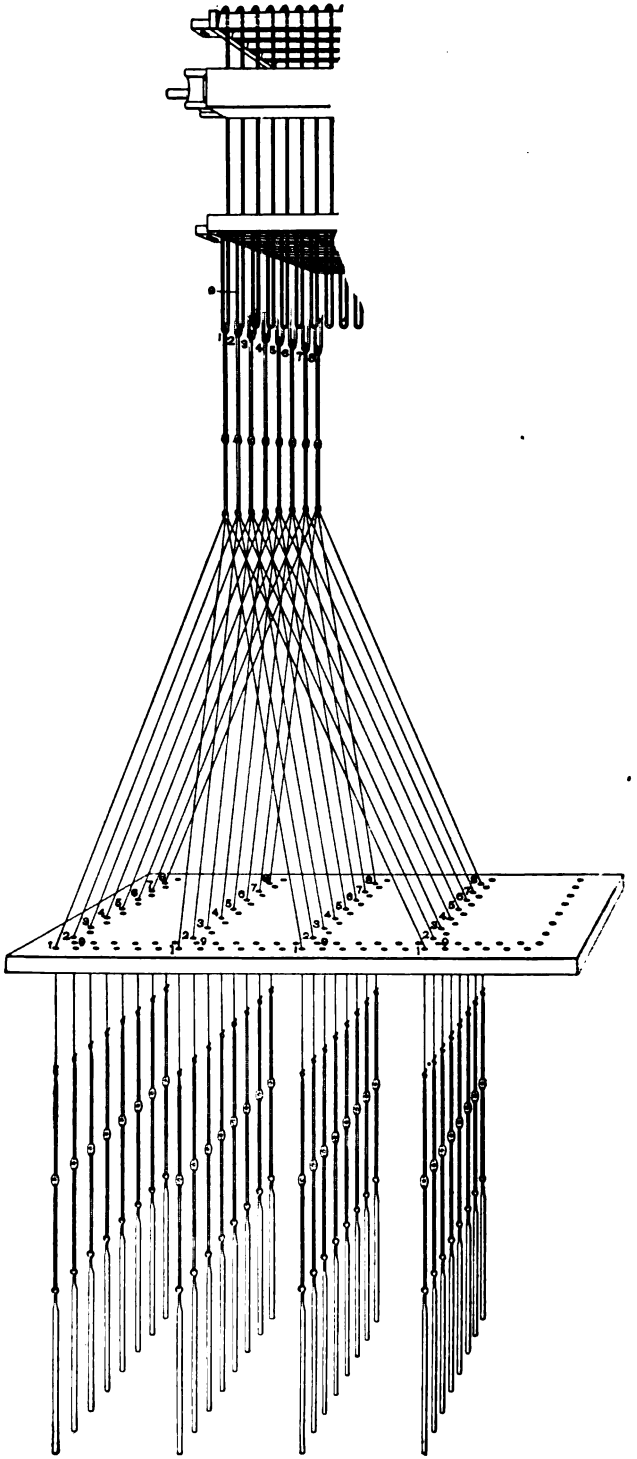

FIG. 5

Digitized by Google

harness lines from the hooks to the comber board in a straight tie. This figure shows 4 harness lines connected to each hook, thus indicating that there are 4 repeats of the pattern in the width of the cloth. The comber board is divided into four imaginary sections, and the harness lines from any one hook pass through corresponding holes in each section. Thus, the harness lines from number *1* hook pass through number *1* holes in the comber board, each of these holes being the first in its respective section; the harness lines from number *2* hook pass through number *2* holes in the comber board; the harness lines from number *3* hook pass through number *3* holes in the comber board, and so on.

When a straight tie is used, the cards on the machine hang either over the front or over the back of the loom. From the fact that the straight tie is used more commonly in England than in America, it is sometimes called the *English tie.*

6. Cross, or London, Tie.—When the jacquard machine is so placed above the loom that the cylinder is either at its right- or left-hand side, as shown in Fig. 6, the harness tie is said to be a **cross,** or **London, tie,** since in this case the long rows of hooks in the machine are at right angles to the long rows of holes in the comber board, thus producing a partial crossing of the harness lines. In this figure, as in Fig. 5, the harness lines connected to the short row of hooks in the machine pass, respectively, to the short row of holes in the comber board, the harness lines from number *1* hook passing through number *1* holes in the comber board, the lines from number 2 hook passing through number *2* holes in the comber board, and so on, the only difference between the methods adopted in the two ties being that in the case of the cross tie the jacquard machine is turned one-quarter way around with relation to the loom. When the cross tie is used, the cards of the jacquard machine hang either over the right- or the left-hand side of the loom. The cross tie is used in America more commonly than the straight tie.

In Figs. 5 and 6, only sufficient harness lines are shown to indicate the manner in which they are passed from the

Digitized by Google

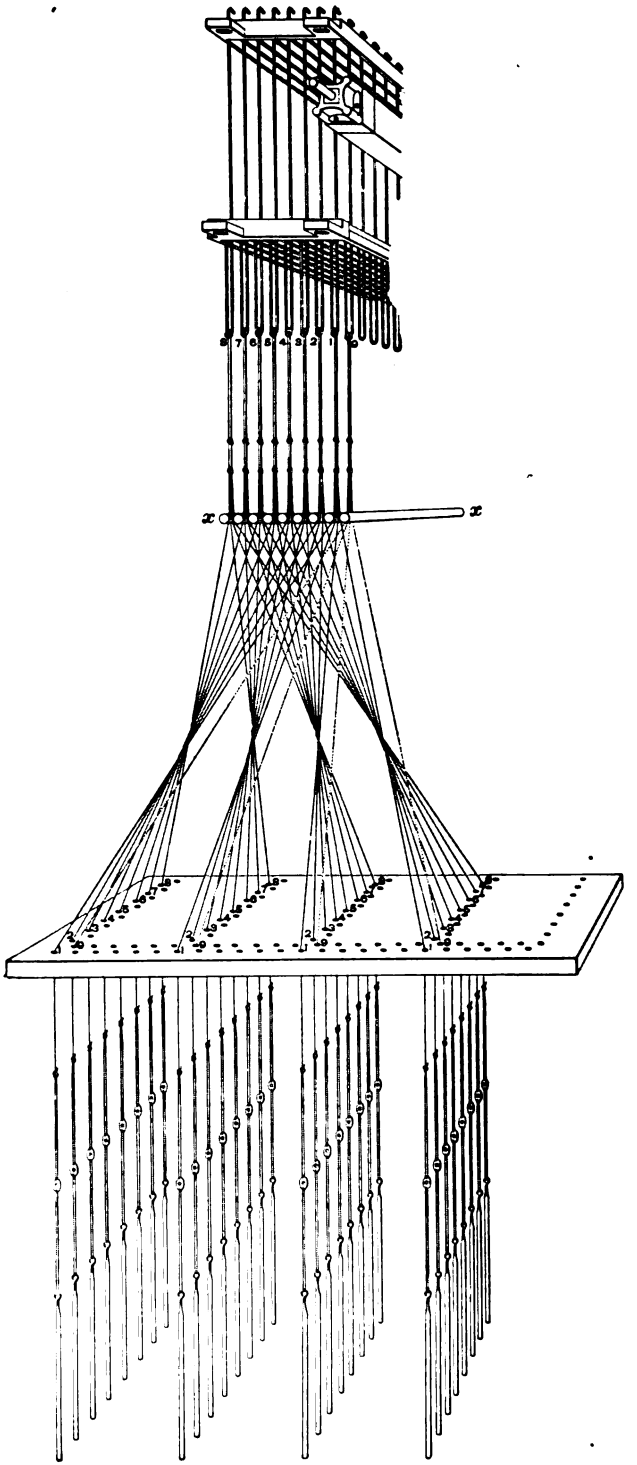

FIG. 6

Digitized by Google

hooks to the comber board, in which only a few holes are shown, but in practice there are lines connected to all, or almost all, the hooks, and there are hundreds, sometimes thousands, of holes in the comber board, each of which has a line passing through it.

7. With a jacquard placed as shown in Fig. 6, it is necessary to separate the harness lines connected to each long row of hooks by glass rods x, in order to equalize the length of the lift on the harness lines. These rods are supported by a frame at each end, which contains holes suitably spaced for the rods to pass through. Thin pieces of wood are secured to the outside of the frames to cover the holes and prevent the rods sliding out.

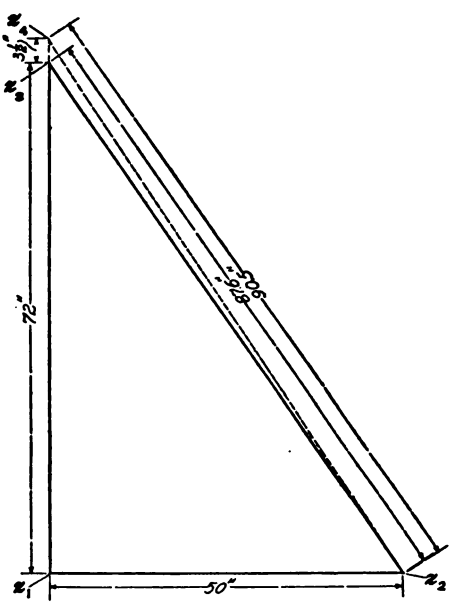

FIG. 7

The object of these glass rods may be more fully understood from the following description. Referring to Fig. 7, suppose that the base $z_1 z_2$ of the triangle $z_1 z_2 z_3$ is 50 inches and represents the distance from the center of the comber board to the outermost hole, while the side $z_1 z_3$ is 72 inches and represents the vertical distance from the comber board to the neck cords. With these two dimensions known, the length of the side $z_2 z_3$, which represents the length of the harness lines extending to the outermost holes of the comber board, will be found to be 87.6 inches, by applying the rule for finding the hypotenuse of a right-angled triangle: Extract the square

Digitized by Google

root of the sum of the squares of the length of each short side ($\sqrt{50^2 + 72^2} = 87.6$ inches).

Suppose that the hook to which these harness lines are connected is raised $3\frac{1}{2}$ inches. Then the distance from the comber board to the neck cords will be represented by $z_1 z_4$, which will be $72 + 3\frac{1}{2} = 75\frac{1}{2}$ inches in length. The length of the side $z_2 z_4$ will be 90.5 inches ($\sqrt{50^2 + 75\frac{1}{2}^2} = 90.5$). The difference in the lengths of the sides $z_2 z_3$, $z_2 z_4$ ($90.5 - 87.6 = 2.9$ inches) will represent the distance through which the outermost end is raised. Subtracting this result from the distance through which the center thread is raised, it is found that the outer thread loses .6 inch ($3.5 - 2.9 = .6$).

By inserting glass rods x, Fig. 6, the angle made by the harness lines at this place is prevented from changing, thus insuring the same amount of lift being given to the harness lines throughout the width of the comber board.

BUILDING THE HARNESSES

8. Before commencing to prepare any part of the harness for the jacquard machine, two important points should be taken into consideration: (1) As considerable expense is incurred in preparing the harness and connecting it to the hooks of the jacquard machine, it is undesirable to change the tie when a fabric of a different construction is desired; consequently, the arrangement of the tie and the ends per inch in the cloth should be determined before preparing the harness lines. The class of tie employed is governed largely by the class of goods to be manufactured, while the number of ends per inch adopted is generally the highest that is used in any class of jacquard goods manufactured by the mill, since it is impossible to increase the ends per inch to any extent after the harnesses have been tied up, although they may be decreased within certain limits. (2) The number of hooks to be used should be carefully determined. That number should be selected that will give the best variety of ground weaves. To illustrate this point, suppose that a 400-hook machine is to be used and it is

Digitized by Google

desired to determine a number that may be employed to the best advantage. The total number of hooks in a 400-hook machine is 416, and, consequently, it is possible to employ any number of hooks not greater than this. At first it would seem natural to use every hook in the machine, in order to obtain the largest possible pattern. This, however, would be a disadvantage and would seriously handicap the person making out the designs, since he would be limited to a certain class of weaves for the ground; consequently, in selecting the number of hooks to be used it is better to take the number that will give the best variety of small numbers as factors.

If 416 hooks are employed, it will be found that for ground weaves complete on 16 ends or less, weaves must be used that are complete on either 2, 4, 8, 13, or 16 ends, since these numbers are the only ones under 16 that are factors of 416; if 400 hooks are used, weaves complete on 2, 4, 5, 8, 10, or 16 ends may be employed for the ground weave. Thus, with 416 hooks, weaves complete on only five different numbers of ends may be employed for the ground weaves, while with 400 hooks, weaves complete on six different numbers of ends may be used. With such a machine, it is preferable in most cases to employ 400 hooks, since with this number complete rows of hooks are obtained in the machine, and an added reason is that 5 is a factor of 400, and weaves complete on this number of ends are very largely used for ground weaves in jacquard designs, the 5-end satin being a very popular weave.

When the total number of hooks in a jacquard machine is not employed for working the regular harness, some or all of the additional hooks may be used, if desired, for selvage or a narrow border; in this case the 16 additional hooks could be utilized in this manner. Usually only two of the extra hooks are employed for the selvages.

Digitized by Google

THE COUPLINGS

9. After the number of hooks to be employed in tying up the harnesses and the style of tie have been determined, it is necessary to prepare the different parts of the harness. These parts are generally prepared separately and away from the jacquard machine itself, after which they are taken to the machine and connected to the hooks. The couplings of the jacquard harness, which consist of all the parts below the harness lines, that is, the top loop, the mail, the bottom loop, and the lingoe, are in some cases prepared by the machine builder, since the difference in the cost of buying them ready-made and preparing them at the mill is very slight, especially if the mill does not have men experienced in this line of work. It is necessary in every case to buy the mails and the lingoes.

The mail a_5, Fig. 2, is made of either brass, steel, or glass, and contains three holes. The warp end passes through the center hole, which is the largest and is either round or elliptic in shape. The lingoe is a piece of heavy wire, the weight of which depends chiefly on the width of the harness in the comber board and the counts, or the number, of the yarn being woven; the coarser the yarn, the heavier should be the lingoe. Lingoes should be perfectly straight. The top and bottom loops of the couplings are connected, respectively, to the top and bottom holes of the mail; these are short loops of linen twine, usually a little finer and of a better quality than the cord used for the harness lines.

10. Fig. 8 (a) shows a good method of attaching the top and bottom loops to the mail. A number of mails are threaded on a wire v that is made the same shape as the center hole, so that the top and bottom holes in the mail eye will be exactly in line. This wire, which should be only about 12 inches long, is supported by two stands v_1, v_2. At one side are placed the stands v_3 that support the spool v_4, on which is wound the twine that is to form the top and bottom loops. When the different parts are in position, the

Digitized by Google

end of the twine from the spool v_4 is stiffened slightly with wax and passed through the eyes at one end of the mails; it is then made fast to the peg v_5, which is placed a sufficient distance from the wire v to give the desired length of loop. The hook, Fig. 8 (*b*), is then passed between the two mails at the left and the twine drawn from between them and looped over the peg v_5. This operation is repeated until the

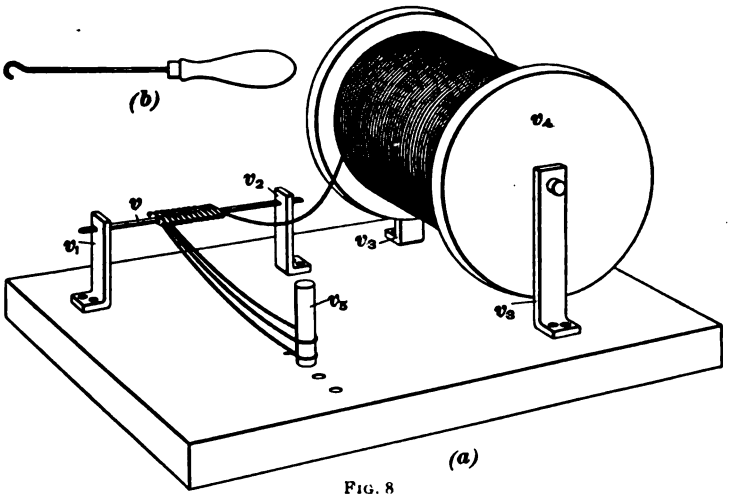

FIG. 8

twine is taken from between each two mails, after which they are reversed and the twine passed through the holes in the other ends in the same way, to form the other loops. The threads are all cut at the end that passes around the peg and, if they are to form the top loops, the ends from each mail are tied together, while if for the bottom loops, the twine is tied to the lingoe.

In preparing the loops in this manner, care should be taken not to employ too many mails at one time, since in this case the angle formed by passing the twine from the mails at the outer edges of the wire v will cause the loops to be longer than those in the center, thus giving a different length of loop for certain of the mails. To avoid this, a horizontal peg mounted on a stand so as to be parallel to v is sometimes used

Digitized by Google

instead of the vertical peg v_1. After the couplings have been prepared in this manner, they should be twisted; this is accomplished by hanging them from a rod, giving them a coat of flour paste, and then rolling the lingoes over the knee, taking three or four at a time, after which the couplings are varnished. In some cases they are not varnished at this stage, as it is sometimes done after they are placed in the loom.

PREPARING HARNESS LINES

11. The size of the harness lines a_1, Fig. 2, is optional with the manufacturers, some using a light-weight and others a heavy line. A twine of about 5-ply 20s or 5-ply 30s linen makes a satisfactory line for use on such fabrics as dress goods, where the number of ends per inch ranges from 64 to 120. In many cases, however, a fine linen cable cord is used for this class of goods, while on wide looms, such as

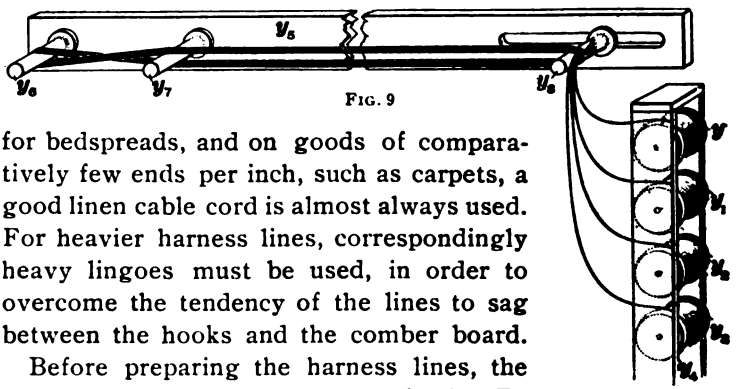

FIG. 9

for bedspreads, and on goods of comparatively few ends per inch, such as carpets, a good linen cable cord is almost always used. For heavier harness lines, correspondingly heavy lingoes must be used, in order to overcome the tendency of the lines to sag between the hooks and the comber board.

Before preparing the harness lines, the necessary number must be ascertained. To illustrate this point, suppose that 400 hooks are being used, that the pattern repeats on 400 ends, and that there are 8 repeats of the pattern in the width of the goods, which would necessitate 8 harness lines being connected to each hook; the number of harness lines would consequently be 3,200 ($400 \times 8 = 3{,}200$). To prepare these harness lines four spools of twine, as shown at y, y_1, y_2, y_3, Fig. 9, are placed in the stand y_4, from which the ends may be readily

Digitized by Google

unwound. In close proximity to the stand is placed a board y_5 containing three pegs y_6, y_7, y_8; the peg y_6 is adjustable and is placed in such a position that the distance between it and the peg y_5 will be equal to the distance from the top loop of the coupling to the neck cord plus about 6 inches for tying purposes. The ends from the spools are first passed under the peg y_6, then under y_7, around y_8, over y_7, and back again to y_6; this will give with each operation 8 harness lines, the number required to be tied to each hook of the machine. This operation is repeated 400 times in order to obtain the required number of harness lines.

By passing the twines around the pegs y_6, y_7 in the manner described, a lease is formed, and before taking the twines from the pegs a string is passed through this lease so that when the harness lines are being connected to the hooks the different bunches may be readily separated; the twines are cut at the point where they pass around the peg y_6. The loop at the other end of the harness lines, that is, the part that passes around the peg y_5, is the part that is connected to the neck cord, which is attached to the hook of the jacquard. Each of the eight loose ends is of course attached to the upper loop of its respective coupling.

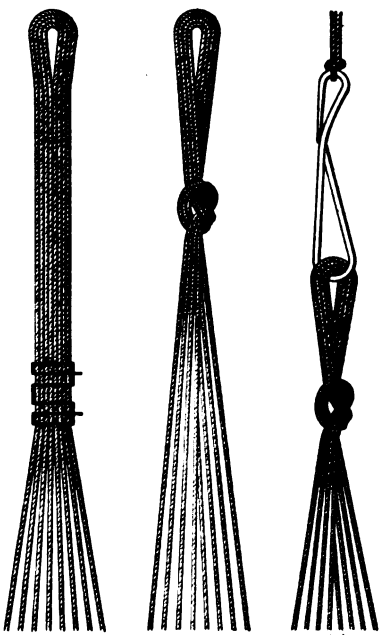

FIG. 10

12. Methods of Fastening Harness Lines.—In order to prevent the lines being caught, during the weaving process, on the knot formed by tying them with the neck cord, it is necessary to closely fasten each bunch of harness

Digitized by Google

lines together near the end attached to the neck cords. Either one of two methods is commonly adopted to accomplish this, namely, *stitching* or *knotting*. When a straight tie is employed, Fig. 5, each bunch of harness lines is stitched, giving a flat, straight surface, as shown in Fig. 10 (*a*). This is accomplished, as indicated by the black lines, by passing backwards and forwards several times, through the centers of the harness lines, a needle threaded with linen twine; the harness lines are afterwards varnished at this point, in order to hold the stitches firmly. For cross ties, Fig. 6, each bunch of harness lines is knotted as shown in Fig. 10 (*b*). In order effectually to prevent the harness lines from catching on the knots of the neck cords, the distance from the neck cord to the knot or stitches in the harness line should be equal, at least, to the height of the shed; consequently, from 3 to 4 inches from the point of connection with the neck cord may be assumed as the correct position at which to place the knot or the stitches. In order to assure their being even, two pegs should be driven into a bench the required distance apart, the loop of the harness lines passed around one of these, and the knot or stitches so placed that they will be opposite the other.

TYING HARNESS LINES TO NECK CORDS

13. After the harness lines and the couplings have been prepared, it is next necessary to attach them to the hooks of the jacquard machine. The harness lines are first tied to the neck cords. In some cases this operation is performed after the machine has been placed in position above the loom, while in other cases the lines are attached to the neck cords before the machine is placed in its position. The latter plan is easier for the person performing the operation, since when tying the harness lines to the neck cords after the machine has been placed in position he must constantly look upwards, which makes the operation somewhat inconvenient.

In case the harness lines are attached to the neck cords when the machine is not in position, the jacquard is placed

Digitized by Google

FIG. 11

FIG. 12

in some suitable place, as on a bench, while for a measure a stick is used that is equal in length to the distance that there should be between the bottom board of the machine and the knot formed by the harness lines and the neck cord. With the leased harness lines in a convenient position, each bunch is taken in its regular order and tied to the neck cords, care being taken that the knot is in its correct position before it is tied tightly, so that when the operation is completed all the knots will be the same distance from the bottom board of the machine. The knot employed when tying the harness lines to the neck cord is shown in Figs. 11 and 12, Fig. 11 showing harness lines that are stitched, while Fig. 12 shows harness lines that are knotted.

After all the harness lines are attached to the neck cords, the machine is placed above the loom and a framework of wooden rods inserted near the point where the neck cords are attached to the harness lines, one rod passing between each two rows of the cords lengthwise of the jacquard machine. These rods must be securely fastened so that they cannot be pulled to one side or the other during the tying process; they prevent the harness lines being pulled out of a straight line

Digitized by Google

when they are being attached to the coupling. The rods are removed when the tying is completed and the harness is ready for operation, but in the case of a cross tie, glass rods are inserted at this point.

Wire hooks similar to that shown in Fig. 10 (*c*) are sometimes employed in both the straight and cross tie, for attaching the harness lines to the neck cords, and are especially suited for use in those mills where the tie is frequently changed and where the harness is to be removed from the loom and laid aside for a time, its place being taken by another harness. Each hook is connected by the machine makers to a special form of neck cord that is made endless, a half knot keeping the hook in position. The loop of the harness lines is fastened to the other end, and the lines are also knotted directly below the hook. The hooks may be readily taken from the neck cord or from the harness lines, as desired.

When taking a harness from a jacquard machine it is necessary to make a lease of all the groups of harness lines near the top. This is usually accomplished by commencing with the first hook and taking the harness lines in regular order to the last. By this means the harness may be connected to the jacquard machine without great inconvenience in case it is desired to again employ the same harness. Sometimes, instead of this method, a cord is passed through the loops at the top of the harness lines in each long row, commencing at the front.

TYING HARNESS LINES TO COUPLINGS

14. Harness Lines Tied Above the Comber Board. The harness lines may be tied either above or below the comber board. When the harness lines are tied to the couplings above the comber board, the couplings are usually threaded through the comber board in some convenient place away from the loom, after which they are taken to the loom and the comber board leveled and securely fastened in position. To level the comber board, boards about $\frac{1}{8}$ inch

Digitized by Google

in thickness are passed under it, one end of these boards resting on the whip roll and the other on the breast beam of the loom. Beveled pieces of wood are then wedged between these boards and the comber board until the latter assumes its correct position. All parts are then securely tied, so that there will be no chance of their slipping. Rods r_1, r_2, Fig. 13, are now passed through the upper and lower loops of the couplings and fastened to some convenient portion of the loom. The position of the rod r_2 is not of much importance so long as it passes through the loops properly, its object simply being to support the couplings before they are tied up; it is held by cords from the comber board. The rod r_1, however, should be so placed that when the mail is drawn up close to its lower edge the harness will be in its correct working position. The position of the rod r_1 is found by passing a string over the whip roll and breast beam of the loom and having the lower edge of the rod about half the depth of the shed below this line. It is held rigidly in the correct position by placing pieces of wood, cut to the proper size, every 12 inches between it and the comber board. The upper edges of these pieces are beveled off thin, so as to fit between two rows of holes of the comber board.

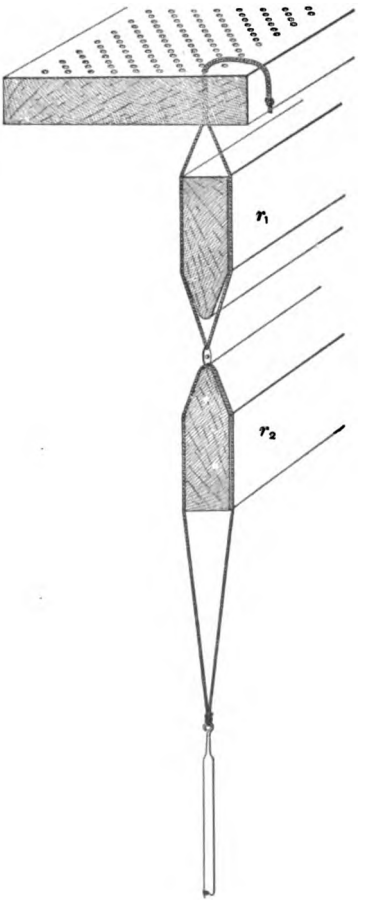

FIG. 13

Digitized by Google

After these different parts are in position, the operator commences to tie the harness lines to the couplings. When this is finished, the rods r_1, r_2 and the supports for the comber board are removed, after which the couplings are sized and twisted and afterwards varnished; this is one of the cases where it is necessary to perform these operations in the loom.

15. Harness Lines Tied Below Comber Board. When the harness lines are tied below the comber board, the empty comber board is first placed in position in the loom, after which the harness lines are threaded through it according to the plan of the tie adopted. The couplings, which should have previously been sized, twisted, and varnished, are then tied loosely to the harness lines and left for about a day, in order that the harness lines may stretch, after which the couplings may be leveled. To accomplish this, a long board about $\frac{1}{2}$ inch thick is placed edge uppermost across the loom under the comber board in such a position that its center is directly under the center of the comber board, while its top edge corresponds to the position of the mails when in their working position. The couplings are then leveled by this board and firmly tied.

In leveling the couplings, the front row should be a trifle above and the back row a trifle below the level of the board, in order to allow for the inclination of the yarn in the bottom shed between these two rows. The knots, together with the harness lines at the point where they pass through the comber board, are then varnished.

Tying the harness lines below the comber board has certain advantages over tying the harness lines above the comber board, especially when a cross tie is used, since, if the latter method is adopted, the knots come at a place where the harness lines lie close together, and thus produce more friction on the lines, while with the former method these knots are separated to better advantage, and there is not so much danger of their catching other harness lines and thus raising ends that are not required to be up.

Digitized by Google

VARNISHING HARNESSES

16. Varnishing the harnesses of a jacquard makes the harness lines smoother and causes them to wear much better. Harnesses that are to be taken from the loom for a time and then used again are usually varnished only where there is friction caused by the lines rubbing together, but in case the harness is to remain in the loom for some time it is all varnished. In every case care should be taken to use good varnish, since some qualities destroy the twine, while others peel off a short time after being used.

The common varnishes are principally made from shellac, beeswax, turpentine, and boiled linseed oil, the best varnish probably being boiled linseed oil alone. This, when well dried, becomes very smooth after working for some time and keeps the twines soft and pliable. Its principal disadvantage is that it takes some time to dry, and consequently cannot very well be used if the harness is tied up in the loom, where dust is apt to collect on it; but if tied up in a room for that purpose, this varnish will be found to be very satisfactory. In some cases a small quantity of beeswax is added to the oil to give it more firmness. Driers are sometimes used to make a varnish dry more quickly, but their use is not to be recommended, as they harden the twine and are very liable to be detrimental to its good working. The varnished lines should not be disturbed until they are sufficiently dry, since if the harness lines are made to rub against each other while the varnish is soft, the surface will be injured and make a rough harness. French chalk is sometimes dusted between the harness lines when the loom is being started; this assists in smoothing them and prevents too much friction when they are new.

Digitized by Google

METHODS OF PASSING HARNESS LINES THROUGH COMBER BOARD

CONSIDERATION OF FIRST HOOK

17. Although the methods of tying up a jacquard harness may be divided into two general divisions, known as cross and straight ties, there are numerous methods of passing the harness lines through the comber board, depending on the character of the designs that are to be woven in the loom. Before dealing with these different forms of ties, however, it is necessary to determine which is to be considered the first hook of the jacquard machine. There is no absolute rule of universal application regarding the position of this hook, different systems being in use in different mills, districts, or countries; but in all systems the first hook, regardless of its position in the jacquard, governs the first end of the design. In this Course, the first end is always considered to be on the extreme left, both of the design as represented on design paper and, consequently, of the warp as drawn through the harness. The hook considered as the first may be in one of four positions—it may be on the left nearest the cylinder, on the left farthest from the cylinder, on the right nearest the cylinder, or on the right farthest from the cylinder. There are, consequently, four possible positions for the needle governing the first hook—it may be the top needle on the left of the cylinder, the bottom needle on the left of the cylinder, the top needle on the right of the cylinder, or the bottom needle on the right of the cylinder. Figs. 5 and 6 show the hook here considered as the first, which in both cases is controlled by the top needle on the left of the cylinder.

The harness lines from this hook pass through the holes marked *1* in the comber board, these holes being at the front of the board. The next hook in the short row of the machine is number *2*, and the harness lines from this hook pass through number *2* holes in the comber board. The next hook to number *1* in the long row of hooks is number *9*,

Digitized by Google

and the harness lines from this hook pass through number *9* holes in the comber board. The hooks are numbered in this manner throughout the machine, commencing with the first hook in the first short row at the left of the cylinder and running consecutively to the back hook and then from front to back in the same way through each succeeding short row of hooks; thus, number 400 hook, if the machine is a 400-hook machine, will in each case be the last hook in the short row at the right of the cylinder.

18. In drawing in a warp, for this system, with a straight draft, as is ordinarily used in jacquard work, the ends are drawn through the harness in regular order, from back to front and right to left; that is, the operator drawing in the warp commences at the right-hand side and draws the first end on that side through the back harness, which is the harness controlled by number 400 hook if the machine is a 400-hook machine, with 400 hooks tied up. The next end is drawn through the second harness from the back, the third through the harness in front of that, etc. When the drawing in is completed, it will be found that the first end of the warp is drawn through the mail of the harness line attached to the front hook in the short row on the left of the cylinder, Figs. 5 and 6, the second end through the mail of the harness line attached to the second hook in this row, and so on. Thus, the first 9 ends will pass through the mails of harness lines passing through holes numbered from *1* to *9*, and in the same order as these holes are numbered, and so on to the four-hundredth end.

As previously explained, the actual operation of drawing in the ends is to commence on the right-hand side, this being more convenient and more nearly in keeping with the ordinary practice on fancy looms.

19. It is very important that a thorough knowledge should be obtained of the method of connecting the needles, the hooks, the harness lines, and the ends of yarn, and the exact relation between the hole in the card and the end in the warp, not only for one end but for all the ends in a warp.

Digitized by Google

If this is thoroughly studied in one system, it is an easy matter to apply the knowledge to other systems that are found in practice where a different hook is considered to be the first, or where a different order of passing the harness lines through the comber board, or the ends through the mails of the harness lines, is adopted.

In general, it may be stated that for looms employed on the same kind of work and not differing structurally in any important point, all connections from the cards to the ends of warp are substantially the same, the difference being in determining which shall be considered the first end and which the last, or which shall be considered the first hook and which the last. As long as the design, cards, harness, and jacquard correspond, satisfactory results in the fabric can be obtained without necessarily following the system here described.

STRAIGHT-THROUGH TIE

20. The **straight-through tie** is the foundation of all other ties used on jacquard machines. With this tie each neck cord has only 1 harness line attached to it, so that each warp end is controlled independently of the others, and is therefore free to work differently. The harness lines are passed through the comber board in regular order, and as only 1 harness line is controlled by each hook, only as many holes will be required in the comber board as there are hooks. This style of tie is usually used to produce a fabric containing but one repeat of the pattern in its width, which is complete on the same number of ends as hooks on which the harness is tied. Therefore, if only one jacquard machine is used, the pattern and the cloth must be comparatively narrow, since in a machine tied up on 400 hooks only 400 ends will be operated, and in a machine tied on 800 hooks only 800, etc. When a pattern occupies the full width of the cloth and a large number of ends interlace differently, several jacquard machines are employed to weave it; they are supported above the loom as closely together as possible and tied up on the straight-through system. For

Digitized by Google

instance, if a pattern were to contain 2,400 ends and occupy the full width of the cloth, two 1,200-hook machines or four 600-hook machines, etc. with a straight-through tie might be used.

LAY-OVER, OR REPEATING, TIE

21. In case one repeat of the design to be produced in the cloth occupies only a small number of inches, and it is necessary to produce a number of repeats in order to obtain

FIG. 14

the required width of the cloth, the harness lines may be connected to the hooks of the jacquard machine with what is known as a **lay-over,** or **repeating,** tie.

Digitized by Google

Suppose, for example, that the design shown in Fig. 14 is to be reproduced in the cloth. It will be assumed that 1 repeat of this design in the ends, indicated by the dotted lines, is to occupy only 2 inches widthwise of the cloth, while the complete width of the cloth is to be 28 inches. It will also be assumed that the harnesses are to be tied on 400 hooks and that there are to be 100 ends to the inch. Then if only a single harness line were tied to each hook, two patterns would be reproduced, since 2 inches, or, in other words, 200 ends (100 ends to the inch), is occupied by each repeat of the pattern. Since, however, it is desired to weave cloth 28 inches wide, there must be 14 repeats of the weave, and since the 400 hooks, if each hook controlled only a single harness line, would give but 2 repeats, 7 harness lines must be tied to each hook of the machine. This design could be woven on a 200-hook machine, if desired, as 1 repeat occupies only 200 ends. In this case 14 harness lines would be attached to each hook of the machine.

It is next necessary to draw up a plan of the comber board that will show the one tying up the harness lines through which hole each harness line from the different hooks is to be passed. Such a plan is shown in Fig. 15, which repre-

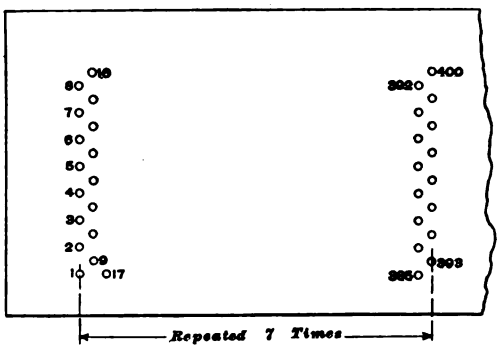

FIG. 15

sents the comber board divided into seven divisions, each representing one repeat of the tie. The 7 harness lines from number *1* hook pass through the number *1* holes in the

Digitized by Google

comber board, while the 7 harness lines from number *2* hook pass through the number *2* holes of the comber board, and this is continued in regular order until all the harness lines from all the hooks have been threaded through their respective holes in the comber board.

In threading the harness lines through the comber board, the lines from number *1* hook are first passed through their respective holes and then usually the harness lines from number *9* hook, instead of those from number *2* hook, after which the harness lines from number *17* hook are passed through their holes in the comber board, and so on to hook *393*. In this manner the harness lines that pass to the front holes of the comber board are tied up before any of the harness lines are passed through the rear holes. If this method were not followed, it would be somewhat difficult to pass the harness lines through the last few holes when the tie was nearly complete, since the other harness lines would tend to cover the holes and prevent easy access. In some ties it is more convenient to tie the first short row of hooks first instead of the first long row.

It will be understood that in practice the design is usually made in accordance with the way the machine is already tied up, and in very few cases is the harness tied to weave one particular design, although this is occasionally done where special designs are required.

CENTERED TIE

22. In case a design in which one half is like the other when working from a central point outwards is to be woven, a tie known as a **centered** tie may be used, in order to reduce the number of hooks necessary to reproduce the design. Such a design is shown in Fig. 16, in which the central line u_1–u_2 divides the design into two parts that are alike when working from the line u_1–u_2 outwards; that is, if the design were folded over on the line u_1–u_2 the figure on one side would fall on the figure on the other side. The repeat of the design is indicated by the dotted lines. In weaving such a design as this, it is possible to reproduce it

Digitized by Google

by considering only one-half of the repeat, if the harnesses are tied up on the centered plan.

To illustrate the method of tying the harnesses for this weave, it will be assumed that the cloth to be woven is to contain 100 ends per inch and that one-half of the pattern, as shown in Fig. 16, will measure 2 inches widthwise of the cloth when woven, thus making a full repeat 4 inches; the total width of the cloth is to be 28 inches. To weave this, it will be preferable to adopt a 200-hook machine, since the full-sized pattern can be produced by tying half the harness lines straight and then centering the tie, which produces the other half and gives a design 4 inches wide. A plan of this tie is shown in Fig. 17.

FIG. 16

The comber board is divided into seven divisions, each of which represents 1 repeat of the tie. The neck cord attached to each hook carries 14 harness lines, and therefore

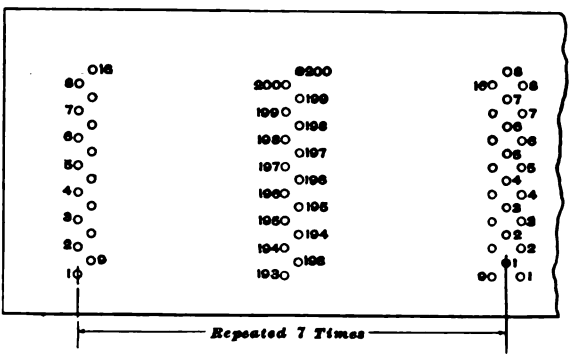

FIG. 17

2 harness lines from each hook will pass to each division of the comber board, as follows: One line from number *1* hook, through number *1* hole in the first half of the repeat of the tie; one line from number *2* hook, through number *2* hole;

Digitized by Google

and so on in regular order for the 200 hooks. This completes the first half of the repeat, and at this point the tie is centered; that is, a harness line from number *200* hook in the second half of the repeat of the tie passes through the corresponding hole numbered *200* in the comber board; a harness line from hook *199* passes through the hole numbered *199*; and so on in regular order, until hole number *1* in the last half of the repeat is reached. One point to be noted in connection with a centered tie is that the design should center on 1 end and not 2 ends; that is, there should not be 2 ends working exactly alike side by side at the center and edges of the pattern. This would happen if warp ends were drawn through all the harness lines passing through the holes numbered *200* and the holes numbered *1*. To avoid this, therefore, no warp ends are drawn through the harness lines passing through the holes numbered *200* and *1* that are marked with crosses in Fig. 17. It will also be noted that if these harness lines are allowed to remain empty, the texture of the cloth is reduced slightly; that is, instead of being 100 ends per inch it is now 99 ends per inch, because 2 warp ends have been thrown out of every 200.

COMBINATION TIES

23. In some cases, the harness for the same jacquard machine may be tied up according to two systems; such an arrangement is known as a **combination tie.** For example, Fig. 18 shows a design that is to be woven on a jacquard machine, the central portion of the cloth consisting of the design (*b*), while on each side of the cloth there is to be a border with the design (*a*); these borders are to be exactly alike, working from the center of the cloth toward the selvages. It will be assumed that the border occupies 9 inches in width and that 1 repeat in the ends, as indicated by the dotted lines of the design for the body of the cloth, is 3 inches. It will also be assumed that the machines on which the design is to be woven contains 1,200 hooks, and that there are to be 100 ends to the inch in the cloth.

Digitized by Google

The border will, consequently, require 900 hooks of the machine, and the body of the cloth, 300. Since the design forming the center of the cloth must be repeated a sufficient number of times to make up the complete width, a number of harness lines equal to the number of repeats of this pattern will be tied to each of the 300 hooks weaving the center design Fig. 18 (*b*). For instance, if the cloth is to be 48 inches wide, 18 inches of this width will be occupied by the border, leaving 30 inches for the center of the cloth. Since 1 repeat of the weave for the center occupies 3 inches in width, there must be 10 repeats of this weave, and as

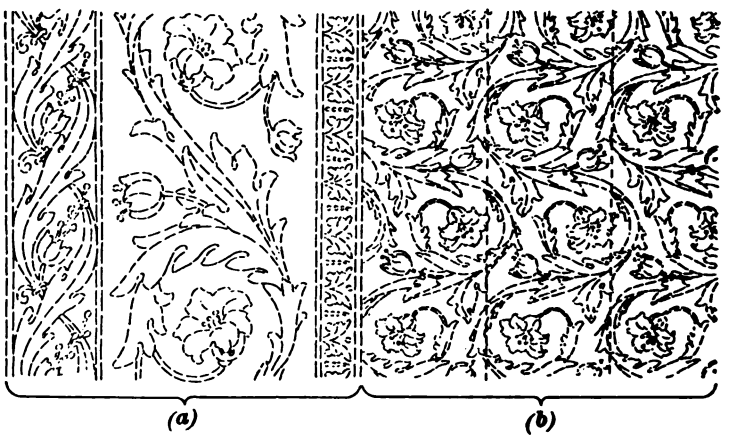

FIG. 18

300 hooks of the machine would weave only 1 repeat of the weave if there were only 1 harness line attached to each hook, 10 harness lines must be attached to each of the 300 hooks weaving the design in the center of the cloth.

Considering next the 900 hooks that are to be utilized for weaving the border, since the border on each side is to be the same from the body design to the selvages, the centered tie may be adopted, and since the 900 hooks with 1 harness line from each will give 9 inches in the cloth, it is only necessary to tie 2 harness lines to each of the 900 hooks weaving the border.

Digitized by Google

The plan of comber board for this tie should be marked off in sections, showing distinctly which holes are to be used for the border and which for the center of the design, as in Fig. 19. Referring to this figure, the manner of passing the harness lines through the holes in the comber board is straight from number *1* to *900*. This gives the border on

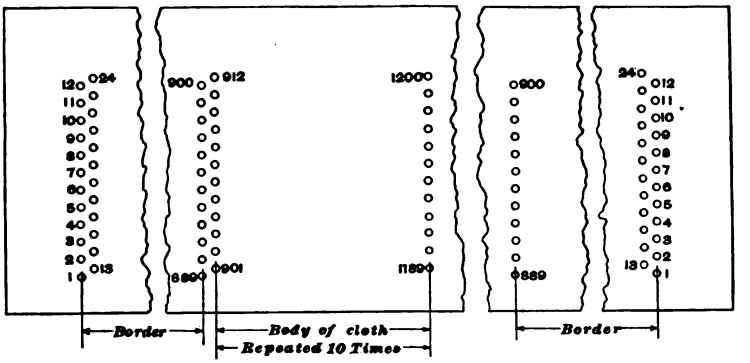

FIG. 19

the left side of the cloth. From number *901* to *1200* the draft is a lay-over, repeated 10 times. After this follows the border for the right-hand side. This border draft is the reverse of the one at the left commencing on number *900* hook and running to number *1*.

CASTING OUT

24. In constructing weaves for jacquard machines, it is often customary to make the design complete on either the same number of ends as there are hooks on which the harness is tied, or on a number of ends that is exactly divisible into the number of hooks on which the tie is made. Thus, if a weave is to be constructed for a machine having the harness tied on 400 hooks, it may be complete on this number of ends, or it may be complete on a number that is exactly divisible into 400, such as 200, 100, 80, or 40. If in any case it is desired to weave a design that is complete on a number of ends not exactly divisible into the number

Digitized by Google

of hooks on which the harness is tied, it will be necessary to cast out those hooks that are not required. For instance, suppose that a weave that repeats on 360 ends is to be woven on a machine having the harness tied on 400 hooks; then 40 hooks will be cast out, as these will not be necessary in forming the pattern. Or suppose that a weave complete on 64 ends is to be woven on a 400-hook harness tie; 64 is contained in 400, 6 times, with 16 as a remainder, and therefore 16 hooks will be cast out.

In casting out hooks, the griff is lifted so as to raise all the hooks, and then those that are to be cast out are thrown off the knives, thus lowering every harness line and eye that is not to be used; the warp can then be drawn through those harness lines that are raised. As no warp ends are drawn through the harness lines controlled by the hooks cast off, these hooks may remain down during the running of the machine, no holes being cut in that portion of the cards that governs these hooks. The hooks are usually cast off from each side of the machine; thus, in the last case mentioned, where 16 hooks were not required to be used, the first and last rows could be cast off, and as each row contains 8 hooks, this would cast out the 16 hooks not required.

Sometimes the weave is such that only a few hooks need be cast out, but at other times it may be necessary to cast out a comparatively large part of the entire number of hooks of the machine. It will be noted that if certain hooks are not used and there are no warp threads drawn through the harness lines controlled by these hooks, the ends per inch in the cloth will be reduced. For instance, if a 400-hook machine is tied up so as to give 80 ends per inch in the fabric, and 40 hooks are cast out, the texture of the cloth is reduced proportionately; that is, $400 : 80 = 360 : x$, x in this case being equal to 72, which is the number of ends per inch that the cloth will contain with the 40 hooks cast out. For this reason casting out is sometimes resorted to solely to reduce the texture of the cloth; but it cannot be done to reduce the texture of a cloth already in the loom, since the design would be spoiled. When casting out is resorted to,

Digitized by Google

therefore, the design must be made, and the warp reeded, according to the number of hooks that are to be used and the texture of the cloth that is wanted.

In all jacquard machines, there are certain reserve hooks that are tied up especially for the selvage. Thus, in a 400-hook machine, which in reality contains either 408 or 416 hooks, 400 hooks are usually tied up for the body of the cloth, while such of the additional hooks as are required are tied up for the selvage. The hooks operating the selvages are usually situated at the right-hand side of the machine as the observer faces the cylinder, although this is not necessary. The harness lines from these hooks pass to the right and also to the left end of the comber board; they are sometimes threaded through slips attached to the front of the comber board, as shown in Fig. 3, while at other times they are passed through the regular holes of the comber board immediately outside of the holes occupied by the harness lines carrying the body of the warp yarn. Usually only two of the extra hooks are used for the selvages, while part or all of the other extra hooks are added to and used the same as the other hooks of the machine, thus increasing its capacity; or they may be used to produce a small border, or left idle.

Digitized by Google

Digitized by Google

JACQUARDS

(PART 3)

CARD CUTTING, LACING, AND REPEATING

INTRODUCTION

1. The preparation of the pattern cards that are used to weave any given design on a jacquard loom is an important branch of jacquard work, and the subject should receive careful study. The designs for cloth to be woven in these looms are prepared on design paper and are much larger than the designs for dobby looms. They are usually painted in such a way that the squares that are painted over indicate where the warp ends are to be raised, while those squares that are not painted represent the warp ends down. On account of the large extent of paper to be covered by the design, this custom, however, is not always followed; for instance, the space occupied by a large figure formed in the design by warp flushes may be entirely painted over with one color, and then the binding with the filling indicated in another color, the latter not having to be cut. However, if the design contains a large figure with warp largely predominating, sometimes the system is adopted of marking only those squares where the warp is down, and instructing the card cutter to this effect. This saves much time in preparing the design.

For each pick in the repeat of the design, one card must be cut; for instance, if there are 384 picks in the repeat, this

For notice of copyright, see page immediately following the title page

Digitized by Google

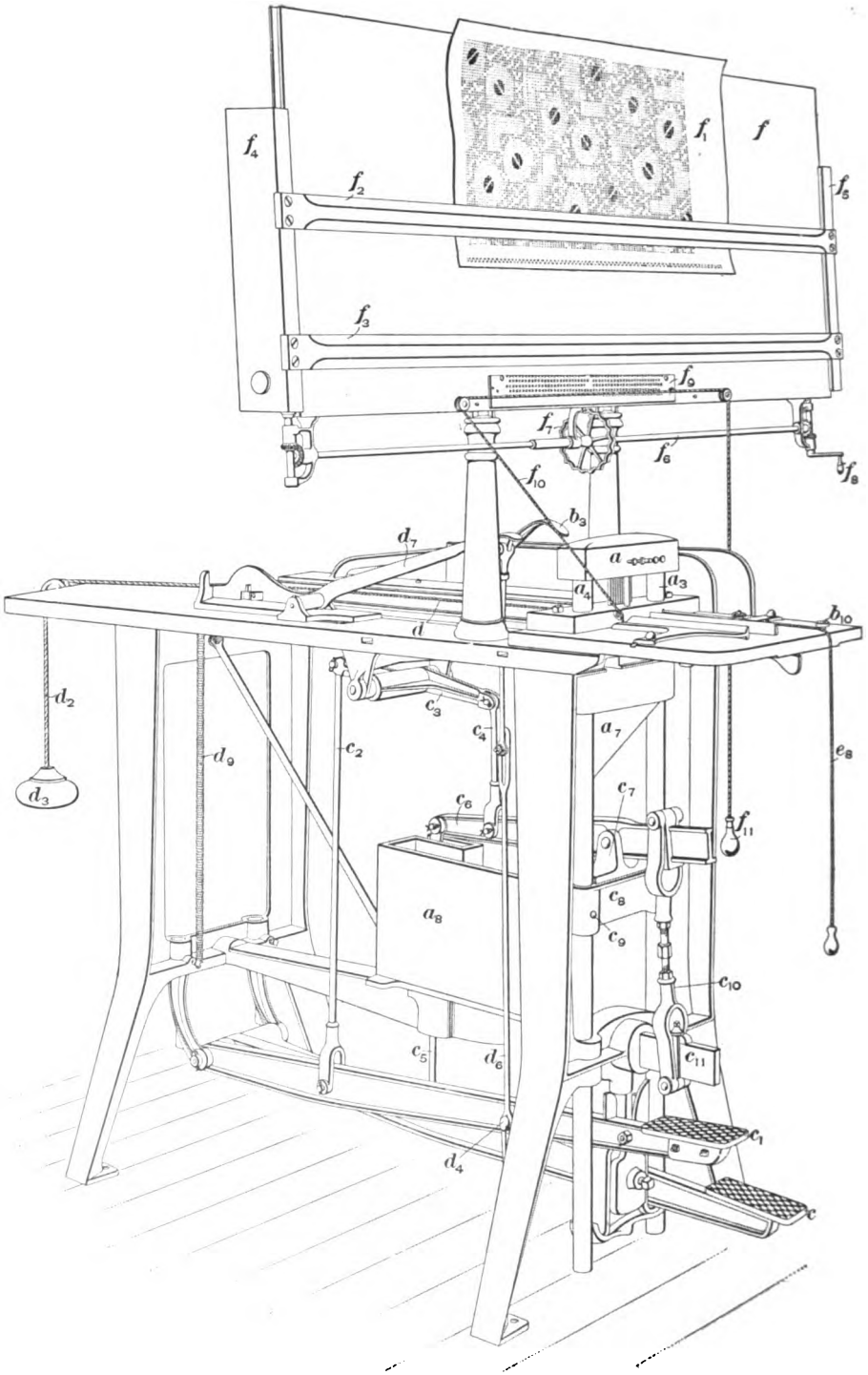

FIG. 1

Digitized by Google

requires the preparation of 384 pattern cards. Each card is cut by punching holes through it in the proper positions, one hole being punched for each small square in one horizontal row on the design paper that represents a warp end lifted.

The design paper used for jacquard designing should be selected so that the small squares are divided off by heavy vertical lines according to the number of hooks in each short row in the machine on which the design is to be woven; thus, if a machine with 400 hooks is to be used, with 8 hooks in a short row, the design paper should be 8×8, 8×10, or such other description as will provide for heavy vertical lines to divide off the small squares into sections of 8. This is for the reason that in reading the design for cutting the cards, the punching that is required is considered with regard to one short row at a time. If 3 hooks out of 8 in the short row are to be raised, all 3 holes are punched at one operation; or, if the entire 8 hooks are required to be raised, all 8 holes are punched at one operation, after which the card is moved a short distance and those holes required to be punched for the next short row are stamped out, and so on. Thus, in a 400-hook machine containing fifty short rows, fifty operations of punching might be required to produce one card of the pattern. In addition, more operations would be necessary to punch the peg holes and lace holes.

Owing to the different methods of indicating the ends that are to be raised or left down, the card cutter should in every case before commencing to cut a set of cards carefully note the instructions of the designer, who usually writes his directions either on the back of the design, or around the sides, stating the colors of the squares that represent ends raised, and consequently the holes to be cut in the card.

The cards are usually made of a tough quality of heavy cardboard that will, as far as possible, resist the strain and wear contingent on their contact with and pressure on the needles and their constant movement around the cylinder of the jacquard machine. Heavier cardboard is used for the larger machines, for machines running at high speeds, and

Digitized by Google

for those designs that are frequently rewoven in different seasons. These cards are cut in strips, so that their length and width will be the right size for the cylinder, before the holes are stamped out. **Card cutting** properly is the punching of the holes, although this is sometimes called *card stamping*.

CARD CUTTING

PIANO MACHINE

2. Construction of the Head.—The machine commonly employed to transfer the design from the design paper to the pattern cards is known as a **piano machine**

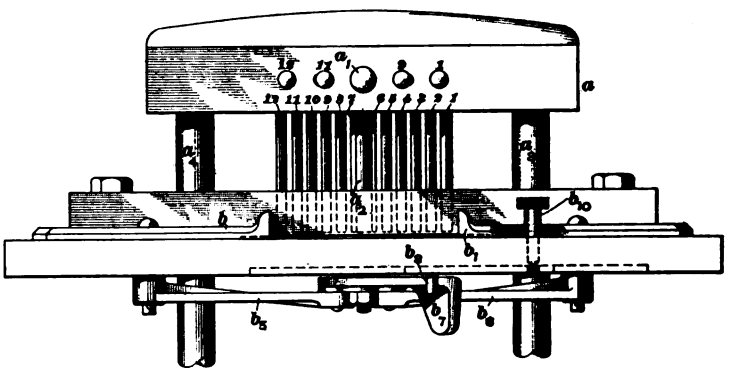

FIG. 2

and is shown in Fig. 1. Its principal part is the head *a*, Fig. 1; a front elevation of this mechanism alone is shown in Fig. 2, while a plan view of it, together with the card guides, is shown in Fig. 3. In order that the interior of the head may be studied, its top is shown removed in Fig. 3. Inserted in the head are twelve keys, numbered from *1* to *12* in Fig. 3; the inner end of each key, when pushed in, comes directly above a vertical punch also carried by the head. These punches are shown in Fig. 2 numbered from *1* to *12* to correspond to the keys that control them. In addition to these twelve keys there is also a key a_1, Fig. 3, that controls

Digitized by Google

the punch a_3, Fig. 2, known as the *peg-hole punch*. The entire head is supported by two upright rods a_3, a_4, Figs. 1 and 2, that slide in bearings supported by the framework of the machine. These rods, together with the head, are lifted

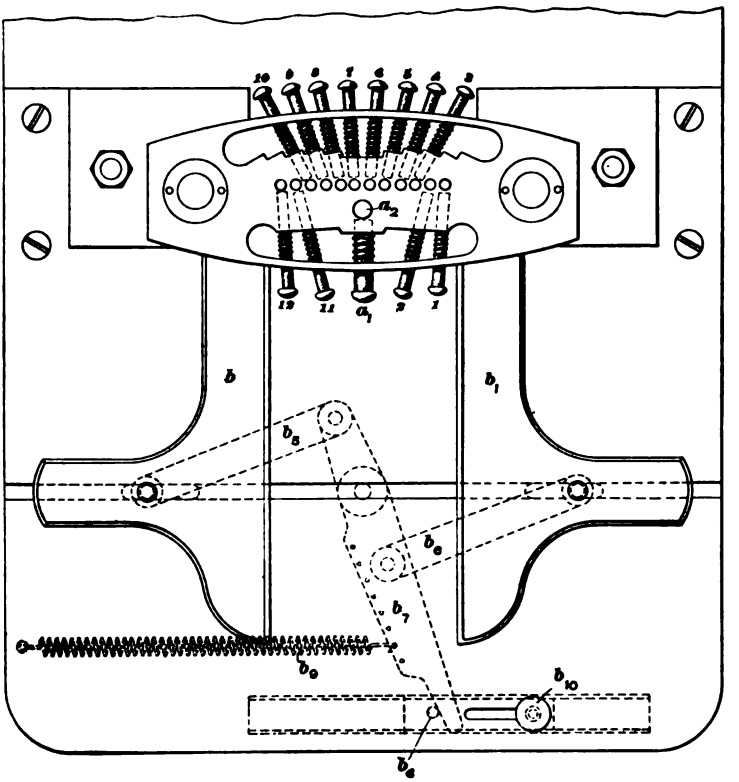

FIG. 3

and lowered by means of levers that are controlled by the feet of the operator.

3. Guides.—The card to be cut is inserted endwise between the guides b, b_1, Fig. 3, and held by a catch b_3, Fig. 4, that is raised to insert the card, shown at a_3, by pressing down on the lever b_3. The spring b_4 returns the catch b_3 to its working position when the pressure is removed from the lever b_3.

Digitized by Google

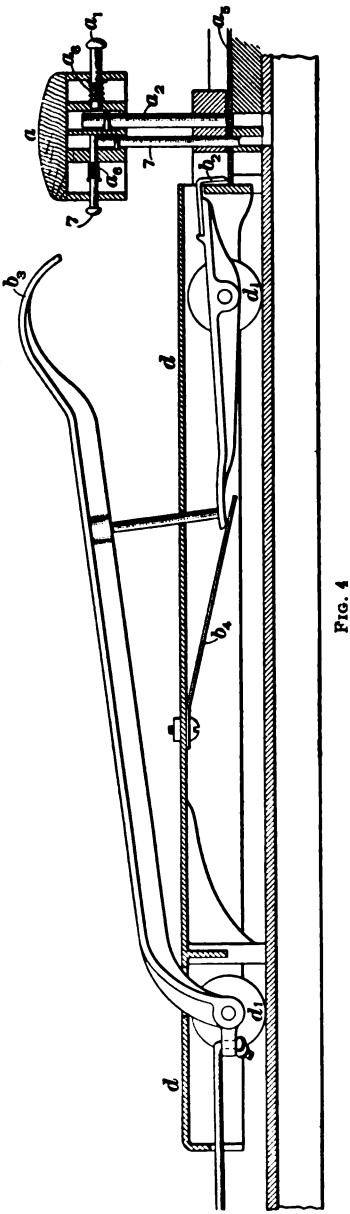

FIG. 4

All jacquards do not have the same number of hooks in their short row, there being either 8, 10, or 12 hooks. The guides b, b_1, Fig. 3, are shown in the position in which they are placed when a card is being cut for a jacquard with 12 hooks in its short row, which necessitates the use of all twelve punches of the piano machine. If, however, cards are to be cut for a machine with 10 hooks in its short row, both guides are moved in toward the center of the machine until the distance between them equals the width of the card; in this case, the two outside punches, or numbers *1* and *12*, would not be used. In the case of a card for a jacquard with only 8 hooks in its short row, the guides would be brought still closer together, and the punches *1*, *2*, *11*, and *12* would not be used.

The card guides b, b_1, Fig. 3, are controlled by connecting rods b_8, b_9 that are attached to a lever b_7, one end of which is held against a pin b_6 by a spring b_5. The pin b_6 is inserted in a slide that may be moved to any desired position and then securely locked by means of the thumbscrew b_{10}. Suppose, for illustration, that the

Digitized by Google

guides are in the position shown in Fig. 3 and that it is desired to change them so that they will accommodate a card requiring the use of only ten punches. The thumbscrew b_{10} is loosened and the slide, together with the pin b_9, moved to the left. This allows the spring b_8 to draw the forward end of the lever b_7 to the left, which, acting through the connections b_5, b_6, draws the guides b, b_1 toward the center. When the guides are in the correct position for the card to be cut, the thumbscrew b_{10} is tightened and no further alterations are required until cards of a different width are used.

4. Mechanism for Raising and Lowering the Head. The mechanism for raising and lowering the rods a_3, a_4, together with the head that carries the keys and punches, is shown in Figs. 1 and 5. Two foot-levers c, c_1 are placed in such a position that they may be readily controlled by the feet of the operator when seated in front of the machine. Connected to the foot-lever c_1 is a rod c_2 that is connected to the lever c_3 attached to the rod c_4, which in turn is connected to the lever c_5. A connection is also formed between the lever c_5 and the foot-lever c by means of the rod c_6. The lever c_5 extends to the front of the machine and has attached to it a casting c_7 bolted to a crosspiece c_8 that connects the rods a_3, a_4. This crosspiece is firmly secured at one end to the rod a_4 by means of a pin c_9 that passes through the two parts, while at the other end it is similarly connected to the rod a_3. At its extreme forward end, the lever c_5 is attached to an adjustable connection c_{10}, which at its other end is connected to the girt c_{11}.

The arrangement of these parts is such that by pressing down on the foot-lever c the crosspiece c_8, together with the rods a_3, a_4 and head a, is lowered, the downward motion of the foot-lever c being communicated to the lever c_5 through the rod c_6. Simultaneously with the lowering of lever c the lever c_1 is raised by means of rods c_4, c_2 and lever c_3. On the other hand, when the foot-lever c_1 is pressed down, the inner end of the lever c_5 will be raised, through the action of

Digitized by Google

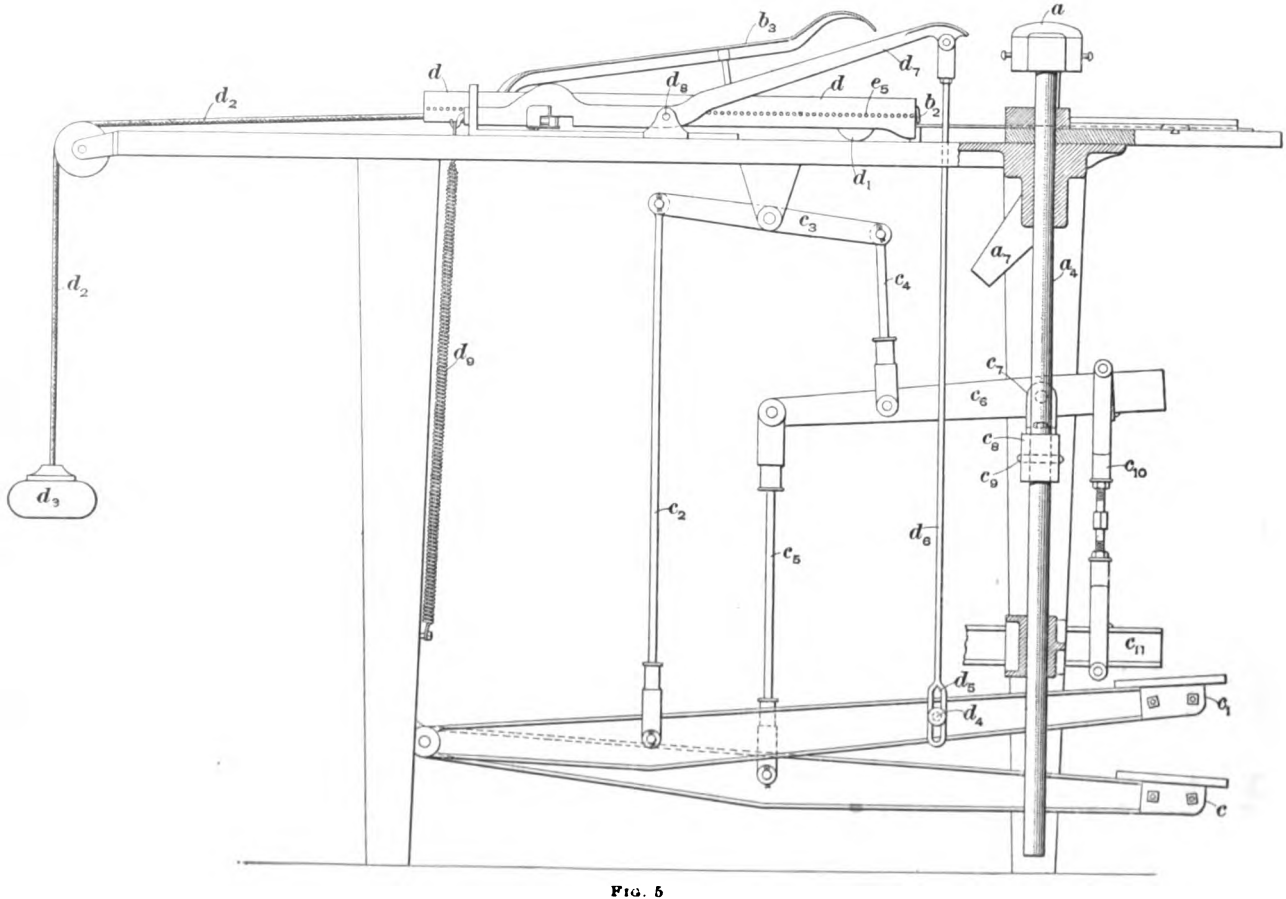

FIG. 5

Digitized by Google

the lever c_3 and rods c_2, c_4, thus raising the crosspiece c_8, together with the head a; this also raises c through the rod c_8. Pressing down on one lever necessarily raises the other into position to be pressed down. The part c_{10} instead of being rigidly connected to the lever c_6 and girt c_{11}, is attached to swinging collars, and since the rods c_2, c_4, c_6 are set loosely on studs, the rods a_3, a_4 are allowed a true vertical movement, thus preventing their binding in the bearings through which they pass.

5. Operation of Punching Cards.—The operation of punching a card is as follows: The operator, seated in front of the machine, presses down the foot-lever c_1, Fig. 5, thus raising the head a together with the punches. The card is then inserted between the card guides and pushed along until it comes in contact with the catch b_3, Fig. 4. Pressing down on the lever b_3 lifts this catch, and the card is then moved into place, when the pressure on the lever is released, which allows the catch to securely hold the card in its proper position. The operator determines from the design, which is placed before him, what holes are to be cut on each row of the card, and with his fingers presses in the keys that lock the punches for the holes to be cut. Suppose, for example, that twelve punches are being operated and that on a certain row every other punch is to cut a hole in the card; then keys *2*, *4*, *6*, *8*, *10*, and *12*, Fig. 3, will be pushed in, which will lock the corresponding punches. The operator then presses down on the foot-lever c, Fig. 5, which brings down the head, together with the punches, so that those punches that are locked by their keys will penetrate the card.

The key a_1 and punch a_3, Fig. 4, show the relative position of a key and punch when the key is out and the head of the machine down. In this case the card a_4 pushes up the punch, which simply rests on the card, without puncturing it. The key 7 and punch 7 in the same figure show the relative positions of these parts when the key is pushed in. In this case the punch is locked by the key, so that when the head is brought down the punch is pushed through the card a_4. When

Digitized by Google

the operator removes his fingers from the keys, the springs a_6 return them to their original positions. If a punch is not locked by its key, the card, coming in contact with it as the head is forced down, pushes it up, as shown in the case of the punch a_2, Fig. 4, and when the head is again raised, the punch drops by its own weight into position. Referring to Fig. 3, keys *1* and *2* are controlled by the thumb of the right hand; keys *3*, *4*, *5*, and *6*, by the fingers of the right hand; keys *7*, *8*, *9*, and *10*, by the fingers of the left hand; while keys *11* and *12* are controlled by the thumb of the left hand; key a_1, Fig. 3, is generally controlled by the thumb of the right hand.

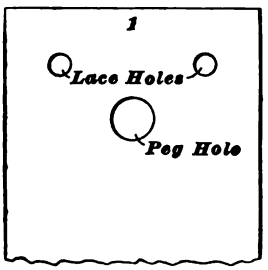

FIG. 6

The first holes to be cut are generally the lace and peg holes at the end of the card first inserted in the machine; they are shown cut in the card illustrated in Fig. 6. These holes are cut at one operation by the operator pushing in the keys controlling the two punches next to the outside punch on each side of the machine, and also the key for the peg-hole punch. Thus, if a card that requires twelve punches is being cut, keys *2*, *11*, and a_1, Fig. 3, are pressed in by the operator and the head forced down. The card is then ready to have the first row of holes for the design punched. The round pieces of card that are cut out by the punches drop into a chute a_7, Fig. 5, and are deposited in a box a_8, Fig. 1.

6. Skip Motion.—An arrangement is provided on this machine by means of which, after one row of holes is cut, the card is automatically moved the exact distance required to bring it in position to have the next row of holes punched. Referring to Figs. 4, 5, and 7, the catch b_5 that holds the card, and the lever b_6 and spring b_4 that control this catch form a part of the carriage d that runs on rollers d_1. Attached to the rear of this carriage is a string d_2 that passes over a pulley at the rear of the machine and supports the weight d_3. This weight exerts a constant pull on the carriage and, if not

Digitized by Google

prevented by some catch, will draw the carriage to the limit of its backward movement. Attached to the foot-lever c_1 is a stud d_4 working in the slot d_5 in the lower end of the rod d_6, which at its upper end is attached to a lever d_7 pivoted at d_8. The rear end of this lever carries a rod e controlled by a spring e_{11}, Fig. 7, and is held down by a spring d_9, one end of which is attached to the lever, while the other end is connected to the frame of the machine. Connected to the front end of the rod e is a block e_3 that slides on a plate e_2 attached to d_7, while screwed to this block is a skip plate e_4, one end of which projects beyond the block and works in pins e_5 attached to the side of the carriage. Another skip plate e_6, which is screwed to the lever d_7, has a projecting end that works between the pins e_5.

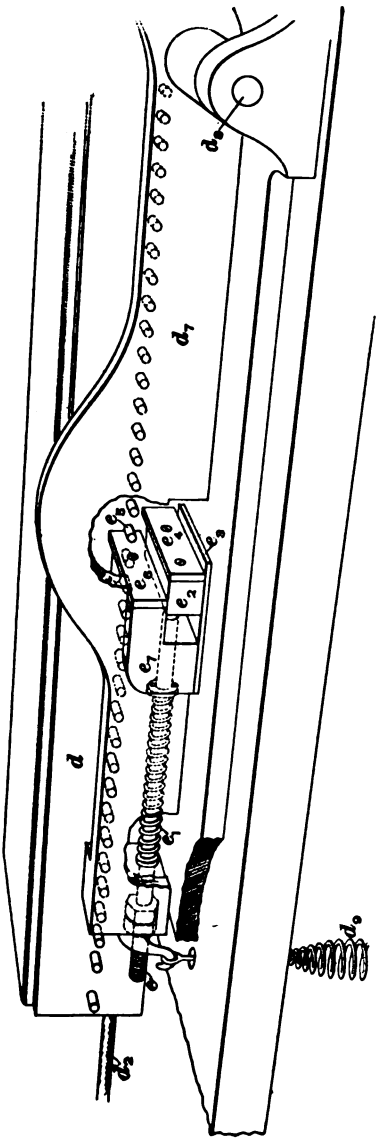

FIG. 7

The operation of this mechanism is as follows: When the rear end of the lever d_7 is held down by the spring d_9, the plate e_6, by coming in contact with one of the pins e_5, prevents the weight d_3, Fig. 5, from moving the carriage d.

Digitized by Google

When, however, the head a is lifted by the operator pressing down the foot-lever c_1, Fig. 5, the stud d_4 comes in contact with the lower end of the slot d_5, which pulls down the rod d_6, together with the forward end of the lever d_7, and raises the rear end of this lever. Referring now to Fig. 7, as the rear end of the lever d_7 is raised by this action, the skip plate e_3 is brought out of contact with the pin with which it has been in contact, and at the same time the skip plate e_4 is brought in contact with the next pin in front of the one with which e_3 was engaged. The weight d_3, Fig. 5, then draws the carriage back, compressing the spring e_1, Fig. 7, until the block e_2 comes in contact with the part of the lever d_7 shown at e_7, when the plate e_4 will be directly under the plate e_3. As the lever c, Fig. 5, is now depressed to cut another row of holes in the card, the lever c_1 rises, allowing the spring d_8 to depress the rear end of the lever d_7; this will move the plate e_4, Fig. 7, out of contact with the pin, but will at the same time cause the plate e_3 to occupy a position immediately behind, and in contact with, the pin that was previously resting against e_4 and thus hold the carriage in position. As the plate e_4 is brought out of contact with the pin, the spring e_1 pushes the rod e, together with the block e_2 and plate e_4, forwards, thus bringing it in position to engage with the next pin when the lever c_1, Fig. 5, is again depressed. As the catch b_2, Figs. 4 and 5, that holds the card is attached to the carriage d, any backward movement of the carriage will give a corresponding movement to the card. The pins e_3 are accurately spaced, so that the distance between them exactly corresponds to the distance between two consecutive rows of holes in the card.

A cord e_5, Fig. 1, that is attached to the carriage is used to draw it forward again preparatory to cutting the next card. To accomplish this, the lever c_1, Fig. 5, is pressed down, thus raising the head and bringing the punches out of contact with the card. The forward end of the lever d_7 is then still further depressed by hand until both skip plates e_4, e_3 are entirely free of the pins e_5, when the carriage may be pulled forwards by the cord e_5.

Digitized by Google

7. Reading Board.—The design f_1, Fig. 1, that is to be cut is tacked to the reading board f. The guide rules f_2, f_3 that aid the operator in following the squares on the design paper with his eye are attached to movable side pieces f_4, f_5, each of which engages a vertical screw carrying at its lower end a bevel gear working in a bevel gear on the horizontal rod f_6. After one row of squares on the design paper has been cut, which completes one card, the operator, by turning the hand wheel f_7 or the crank f_8, moves the guide rule into its correct position to show the next row to be cut. Two guide rules are used simply for convenience in reading small designs, and also because the range of adjustment of the side pieces f_4, f_5 is not sufficient to cause one guide rule to move over the entire surface of the reading board. They also serve to stiffen the side pieces and render the whole arrangement rigid.

Attached to the reading board is a card or a portion of a card f_9 that is an exact duplicate of the cards being cut. All the holes in this card are cut, and the vertical rows of holes are numbered consecutively, commencing at the right-hand side. A cord f_{10} that passes over pulleys attached to the reading board is connected at one end to the carriage, while its other end carries a weight f_{11}. An ordinary pin is passed through this cord, or a knot made in it, in such a position that when the carriage is in its correct position for cutting the first row of holes in the card, the pin or knot will be opposite the first row of holes on the card f_9. The operator is thus enabled to tell at any time which row of holes he is cutting on the card by simply observing the position of the pin or knot on the guide card.

METHODS OF READING DESIGNS

8. In cutting cards for a jacquard design, a clear understanding should be had of the relation between the holes in the card and the hooks of the machine; also, of the system adopted for numbering the hooks (that is, which is to be considered the first hook) and in what order and direction

Digitized by Google

the design must be read and the cards cut. In order to illustrate these points, it will be supposed that a machine with 8 hooks in the short row is being used and that the design shown in Fig. 8 (*a*) is to be cut, this design being complete on 16 ends. Jacquard designs are of course complete on a very much larger number of ends than this, but a design complete on 16 ends is taken as an example because this illustrates the principle as well as a design complete on a greater number of ends.

Each card represents only 1 pick, and the cards are numbered in the order in which they are presented to the needles of the machine, the first card selecting the hooks for the first pick, the second card those for the second pick, etc.

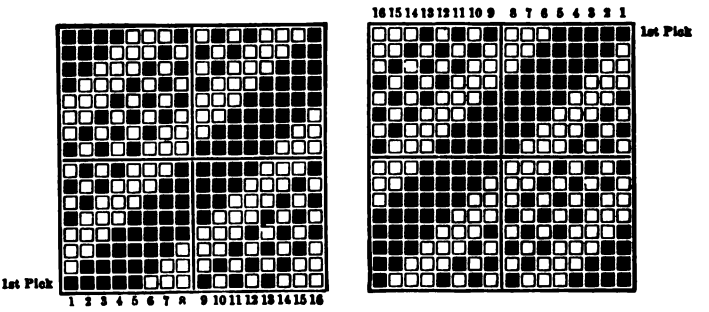

FIG. 8

When cards are being cut, it is the rule for the operator to have the numbered side of the card up, and the numbered end is passed into the card-cutting machine first. When the card is placed on the jacquard machine, the numbered side comes next to the needles, with the numbered end in such a position as to operate the first needle correctly; that is, if the first hook is considered to be the one on the extreme left nearest the cylinder, operated by the top needle in the left-hand short row, the numbered end of the card is placed at the left. All that is necessary when cutting cards for a design is to know the position of the needle operating the first hook; for instance, in the case just given, if the first end of the design is to be raised over the first pick, the hole cut

Digitized by Google

for this will be at the extreme left of the first row at the numbered end of the card.

9. Suppose that it is desired to cut cards, to give the design shown in Fig. 8 (*a*), for a jacquard in which the first hook is considered to be the one that is on the extreme left nearest the cylinder and operated by the top needle in the left-hand short row. The first end and first pick of the design, situated at the lower left-hand corner, are marked in Fig. 8 (*a*). The design may be placed on the reading board of the card-cutting machine either right side up or upside down. When it is desired to read it right side up, it is tacked to the reading board and the guide rules are moved so that the lower edge of one of them will come just above the first pick, thus enabling that pick to be easily read. In this case the card cutter will read from left to right. If a machine similar to that illustrated in Fig. 1, with 12 punches, is used, it must be adjusted so that 8 punches only will be used, as the cards must be cut with 8 holes in each short row. In such a case, punches numbered from *3* to *10*, Fig. 3, would be used. As the card is inserted in the machine with the numbered side up and the numbered end first, and as it must be so placed on the jacquard machine that when it comes against the needles the numbered end will be at the left when facing the cylinder and the numbered side against the needles, holes that are cut by the punch operated by key number *10*, Fig. 3, will come against the needle that operates the first hook, and holes cut by the punch operated by key number *3* will come against needles that control the eighth hook.

Fig. 9 shows the ends of two cards, (*a*) representing how the first two rows of holes would be cut for the first pick of the design shown in Fig. 8 (*a*), while (*b*) represents how the first two rows of holes would be cut for the second pick. As the design in Fig. 8 (*a*) is read by the card cutter, he observes that the first, second, third, fourth, and fifth ends must be raised in the first section of 8 ends. By pressing

Digitized by Google

the tenth, ninth, eighth, seventh, and sixth keys, Fig. 3, holes are cut in the card as shown in the first row in Fig. 9 (*a*). The card is then moved along to bring it into position for cutting the holes for the second section of 8 ends of the design, namely, the ninth to the sixteenth ends of the first pick. In this case it is required that the machine shall raise the hooks operating the first, third, and fifth ends in this section of 8 ends, and the card cutter consequently presses the keys numbered *10*, *8*, and *6*, Fig. 3, thus cutting holes as shown in the second row in Fig. 9 (*a*). Fig. 9 (*b*) represents the end of a card for the second pick of Fig. 8 (*a*); the object in punching the holes in the order and position

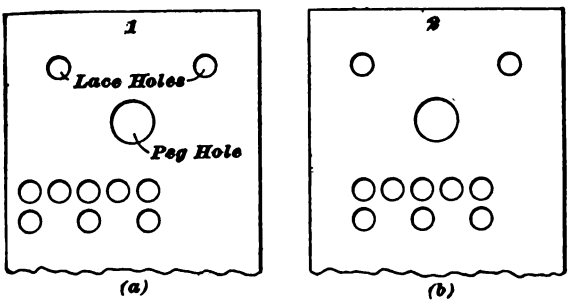

FIG. 9

shown in Fig. 9 (*b*) can be seen by observing which ends are to be raised on the second pick of the design. In case a design is complete on a smaller number of ends than there are hooks in the machine, the card cutter repeats the first pick as shown on the design paper until the entire card has been cut.

For convenience, it is frequently the custom to place the design upside down on the reading board, thus bringing the first end and first pick in the upper right-hand corner, as shown in Fig. 8 (*b*), which is the same design as Fig. 8 (*a*), excepting that its position is changed. In this case, the card cutter moves the guide rules so that the upper edge of one of them, usually the top one, will come just below the first pick, thus enabling him to read it readily. With the design in this position, the card cutter commences at the right of

Digitized by Google

Digitized by Google

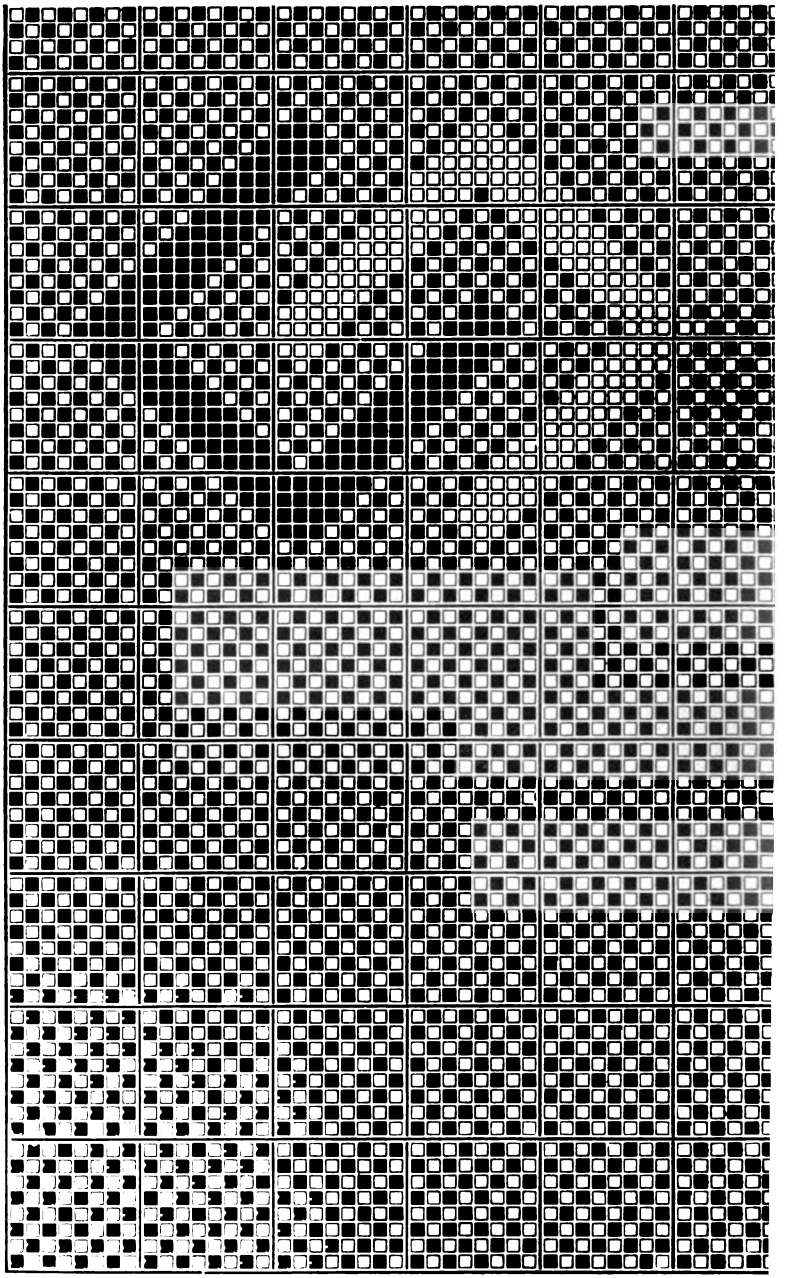

Digitized by Google

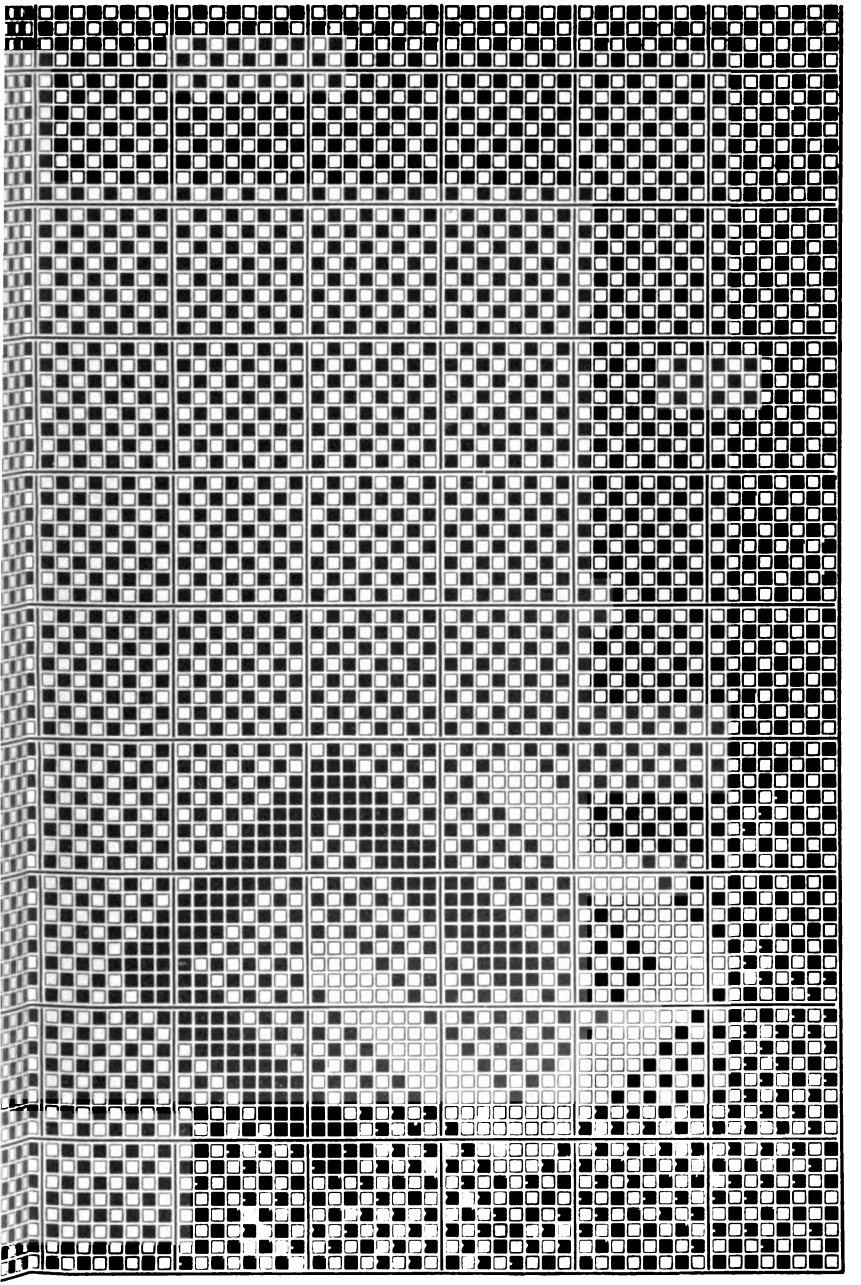

FIG. 10

Digitized by Google

Digitized by Google

the design to determine the holes that are to be cut, and reads from right to left. In this case the punches are selected exactly as in the previous instances, and as reading the design from right to left after it has been turned upside down also gives the same result as reading it from left to right when in a normal position, the cards will be perforated in the same manner in either case.

METHOD OF CUTTING A SET OF CARDS

10. In order to understand more fully the operation of cutting the cards from a design worked out on design paper, it will be assumed that it is desired to cut a set of cards that will give the design shown in Fig. 10. It will further be assumed that the machine to be used to weave this design is a 400-hook jacquard with 8 hooks in a short row and 51 hooks in a long row, the harnesses being tied up on 400 hooks. As shown in Fig. 10, the design occupies 96 ends, and since 96 is not a factor of 400—the number of hooks to which the harness lines are attached—it is necessary to have some of the hooks, together with the harness lines that are attached to them, inoperative. Dividing 400 by 96, it is found that this number of hooks will give four full repeats of the pattern with 16 hooks left over. This number of hooks must consequently be cast out.

It should be understood that casting out some of the hooks in this manner reduces the ends per inch proportionally. For example, if the comber board gives 100 ends per inch when the full number of hooks in a machine is being used, casting out 16 hooks, as in this case, will reduce the ends per inch from 100 to 96. (400 : 384 = 100 : 96.) The fact that casting out hooks in a jacquard machine reduces the ends per inch in the goods is often taken advantage of for this purpose alone.

In casting out hooks, those to be left idle should be distributed at regular intervals so that the yarn will not pass to the reed at an angle that will cause it to be chafed and broken. In the case of the design shown in Fig. 10, since

Digitized by Google

this machine is a 400-hook machine, having 8 hooks in each short row, and since there are 16 hooks to be cast out, there will be two rows of 8 hooks each that will not be required. These two rows of hooks may be omitted at the end of the machine, or one row may be left out at the center—the twenty-fifth—and another at the end—the fiftieth. The latter case will be taken for illustration.

Having determined which hooks are to be left idle, it is next necessary to mark off, on a narrow strip of paper, squares exactly equal in size to the squares on the design paper enclosed by the heavy lines. There should be as many of these squares in a horizontal row as there are large squares in one horizontal row occupied by the design, in this case twelve; while each vertical row should contain as many squares as there are repeats of the weave in one card, in this case four. The squares are numbered consecutively, as shown in Fig. 11, which illustrates one of these slips marked off for the design shown in Fig. 10.

38	39	40	41	42	43	44	45	46	47	48	49
26	27	28	29	30	31	32	33	34	35	36	37
13	14	15	16	17	18	19	20	21	22	23	24
1	2	3	4	5	6	7	8	9	10	11	12

FIG. 11

Referring to Fig. 11, it will be noticed that there are no squares marked *25* or *50*, but that these numbers are set down in a different manner from the other numbers; the object of this is to indicate to the card cutter that after cutting the twenty-fourth and also the forty-ninth row of holes on the card, the next rows, or the twenty-fifth and fiftieth, are to be skipped. After making out the slip of paper as described, it is attached to the guide rule on the reading board in such a manner that the vertical lines of the squares will exactly correspond to the heavy vertical lines on the design paper. By this means the operator can readily determine for which large square of the design paper he is cutting.

Each operation of the piano machine cuts the holes to operate the hooks in one short row of the jacquard machine; or in other words, if the machine contains 8 hooks in a short row, the piano machine will cut holes to correspond to the

Digitized by Google

needles operating these hooks as the pattern calls for. For this reason, and in order to enable the card cutter to follow the design more readily, it is customary to use design paper divided into sections of eight squares when cutting cards for a jacquard machine having 8 hooks in its short row. If the machine has 10 hooks in its short row, design paper divided into sections of 10 is preferable; while if the machine has 12 hooks in its short row, design paper divided into sections of 12 should be used.

11. To further illustrate the method of casting out hooks and marking off slips of paper that are attached to the guide rule, suppose that it is desired to weave on a 400-hook machine a design that is complete on 160 ends. Dividing 400 by 160, it is seen that there will be two repeats of the pattern and 80 hooks that will be left idle. As there are 8 hooks in a row, 10 rows of hooks must be thrown out. In order to prevent too many hooks being omitted at any one place, it is preferable in this case to throw out two rows of hooks at two separate points of the machine and three rows at each of two other points, thus giving 10 idle rows. Since the design will be made out on 8×8 design paper, and since the pattern repeats on 160 ends, there will be 20 large squares across the design paper in one repeat of the pattern, or in other words, there will be 20 squares in each horizontal row on the strip of paper that is marked out to be placed on the guide rule. When numbering the squares on the slip of paper, they will be numbered consecutively up to *10*; then the numbers *11* and *12* will be set down in such a manner as to indicate that these two rows of hooks are to be omitted. Commencing again at *13*, the squares will be numbered consecutively up to *22*, when the numbers *23*, *24*, and *25* will be set down in such a manner as to indicate that these rows of hooks are to be omitted. This will complete one reading of the design, that is, it will give 160 ends, but since this is to be repeated in order to occupy the full card, there will be another horizontal row of squares directly above the first. These will be numbered

Digitized by Google

consecutively commencing with *26* and running up to *35*, when the numbers *36* and *37* will be marked in such a manner as to indicate that these rows of hooks are to be omitted; the squares will then commence with *38* and be numbered consecutively up to *47*, when the numbers *48*, *49*, and *50* will be set down in such a manner as to indicate that these rows also are to be omitted. A slip of paper marked off in this manner is shown in Fig. 12.

12. After the slip has been attached to the guide rule, the design paper is fastened to the reading board and the guide rule set in such a manner that it will come directly above or below the first pick to be read. Suppose that the design shown in Fig. 10 has been attached to the reading board right side up, bringing the first end and first pick in the lower left-hand corner. The operator moves the guide

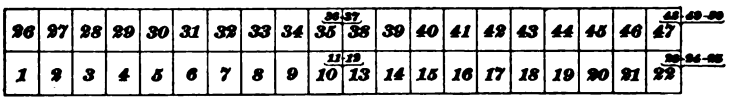

FIG. 12

rule until it is in the correct position and then commences to punch the holes called for by the design. As one card serves for only 1 pick of the design, the reading of 1 pick determines the manner of cutting one complete card, and after this card has been cut the guide rule is moved until it is in the correct position for reading the next pick. It should be borne in mind that one operation of the piano machine punches the holes called for by that portion of the pick between two heavy vertical lines, or in the case of the design shown in Fig. 10, one operation of the machine punches the holes to operate 8 ends on 1 pick; consequently, with this design, the machine must operate twelve times in order to produce one repeat. Since, however, this determines the operation of only 96 hooks, and since there is a total of 384 hooks, each pick as shown on the design paper must be repeated on the card four times in order to complete the punching of the card; consequently, after the operator has

Digitized by Google

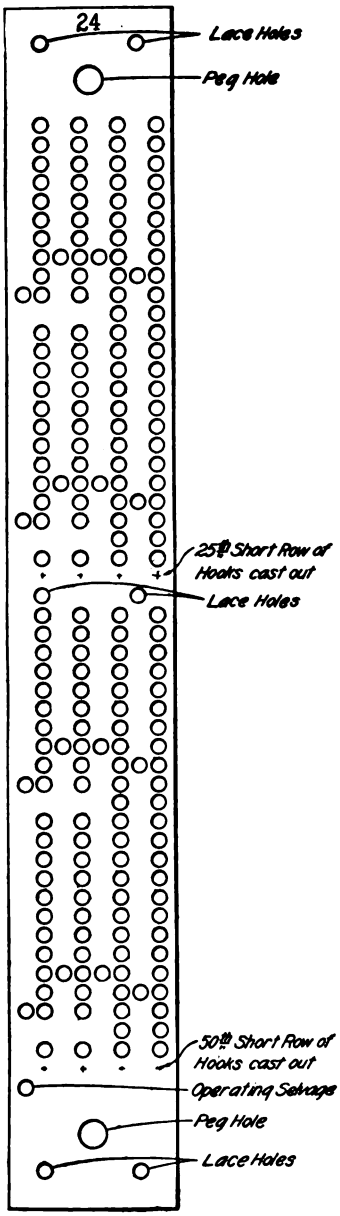

FIG. 13

read the pick once, he commences again with the first end and repeats the operation.

Fig. 13 shows a card cut for the twenty-fourth pick of Fig. 10 to operate the hooks in a machine in which the hook on the extreme left nearest the cylinder is considered the first hook. This card would be placed on the cylinder with the numbered side next the needles and the numbered end at the left.

It is assumed that 2 hooks of the extra short row are to be used to operate the selvages; therefore, in Fig. 13 a hole is punched to raise one of these hooks, while on the next card, the other hook would be raised, so that a plain selvage would be produced.

LACING

LACING BY HAND

13. After the cards have been cut, it is necessary to lace them together in such a manner that they may be placed on the cylinder of the jacquard machine. This operation was formerly performed by hand, but as this process is necessarily a slow one, automatic card-lacing machines have been

Digitized by Google

invented and are largely used at the present time. When cards are laced by hand, they are placed on a hand-lacing frame, which consists principally of two long supports for the cards. Metal or wooden pegs are inserted at regular intervals in each support, the distance between the two supports being such that when the cards rest on them the two rows of pegs will be at a distance apart corresponding to that of the peg holes in one card, while the pegs in each support are so spaced as to give the exact distance between the cards that is required in order to have them pass around the cylinder of the jacquard machine. These frames usually hold from thirty to fifty cards, while the pegs are capable of being moved nearer together or farther apart, in order to regulate the space between them for different-sized cards. After a number of cards have been placed on the frame in the order in which they are to come on the machine, the operator laces them together with a heavy twine threaded through a needle. The needle is passed up through the first lace hole of the first card, down through the second hole of the same card, up between the first and second cards, down through the first hole of the second card, up through the second hole of this card, down between the second and third cards, and so on with all the cards. The operator then starts again with the first card, but this time reverses the order of passing the needle through the cards; that is, the needle in this case is passed down through the first hole of the first card and up through the second hole, instead of up through the first hole and down through the second, as in the former case. The two ends are also crossed between each two consecutive holes and also between each two consecutive cards, giving the result shown in Fig. 14, which shows the cards laced in this manner.

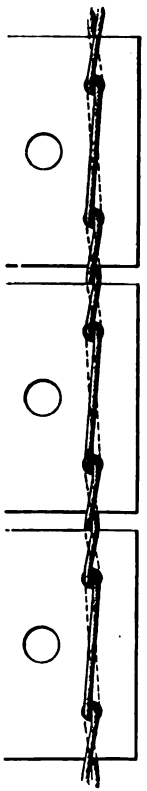

FIG. 14

Digitized by Google

AUTOMATIC LACING

14. General Construction of Automatic Lacer. The stitch formed when the cards are laced by hand differs from that formed by the automatic lacer and is considered preferable by some, although the greater rapidity with which cards can be laced on the automatic machine has caused hand lacing to be superseded. It is also possible with the automatic lacer to regulate the tension of the lacing cords and keep them at a uniform tension throughout the lacing of a set of cards. This is somewhat difficult in the case of hand lacing, since the operator may draw the cords tighter at one point than at another.

Fig. 15 shows a view of an automatic lacing machine, while Fig. 16 shows a view, partly in section, of the same machine. Referring to these figures, the cards g are placed in the correct order in a stack between two uprights g_1, g_2, and rest on a steel plate g_4, Fig. 16, that is screwed to a rack g_3; this rack is capable of being moved back and forth in a table that supports these different parts. When the rack g_3 is moved to the right, in Fig. 16, the plate g_4 is withdrawn from under the cards g and the bottom card rests on the rack, just in front of g_4. As the rack is moved to the left, the plate g_4, which is slightly thinner than one card, pushes the bottom card forwards until it is in position below the lace-hole punches h_2, h_3 and the peg-hole punch h_1. There are two sets of these punches, one at each end of the head, while in the center are placed two punches similar to h_2, h_3. When the next card in the bottom of the stack is brought into position to be punched, the card previously punched is pushed forwards until the peg holes in the card are engaged by pegs on the sprocket carrier chain i. This chain carries the cards forwards until they are brought into position below the needles j. There are three of these needles in the width of the machine, one for each set of lace holes, and as the first set of lace holes of the card is brought into position, the needles descend, pass through them, and form, below the card, a loop of the cord that is threaded

Digitized by Google

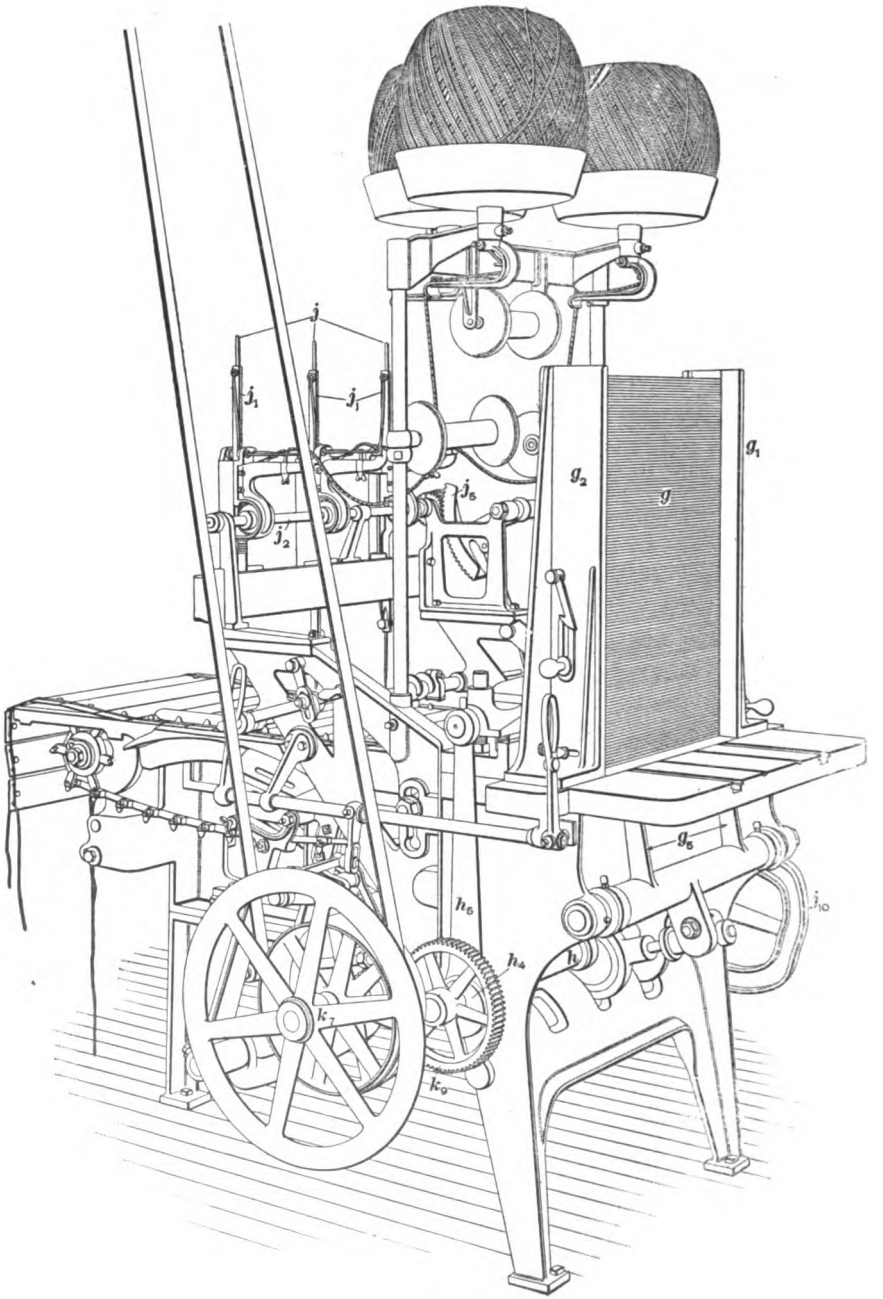

Fig. 15

Digitized by Google

Digitized by Google

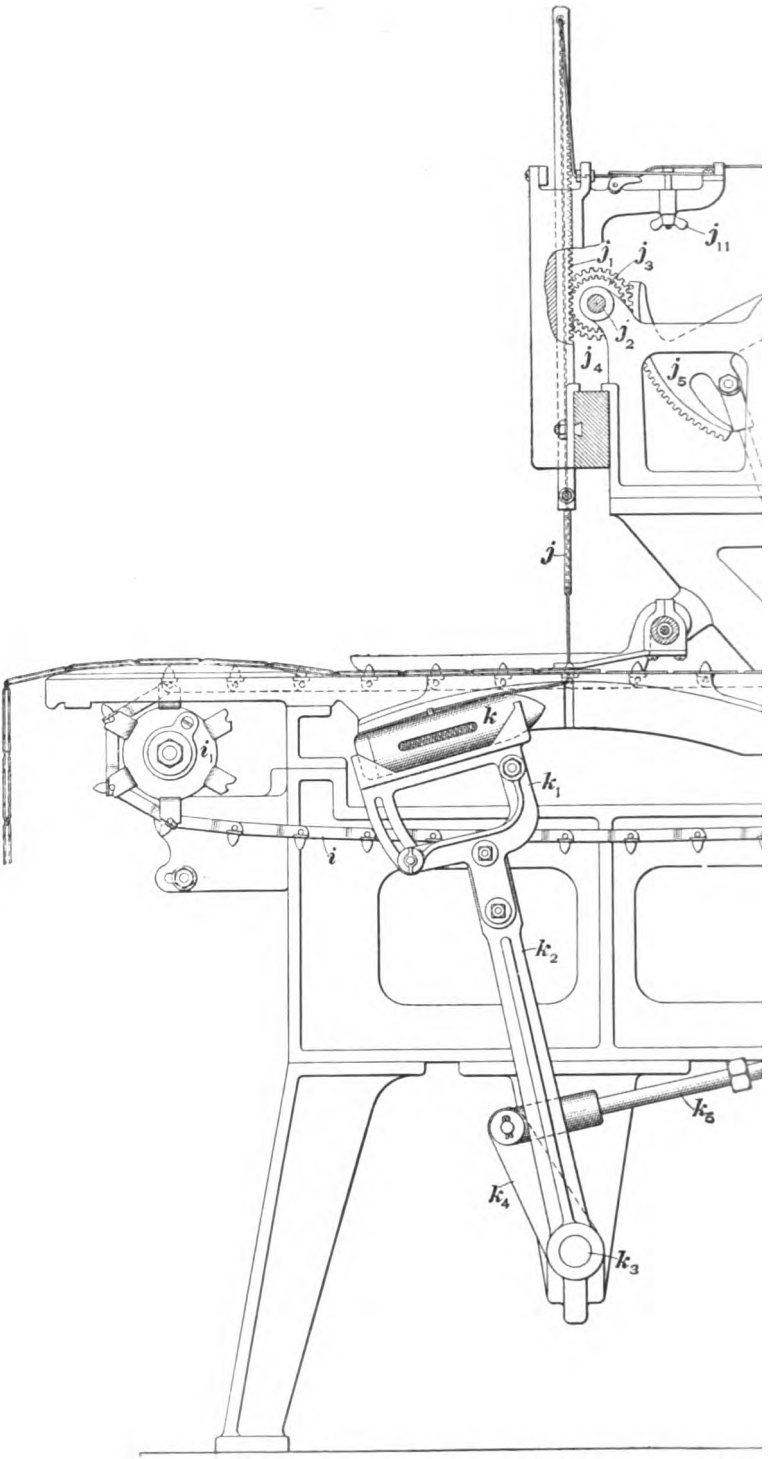

FIG

Digitized by Google

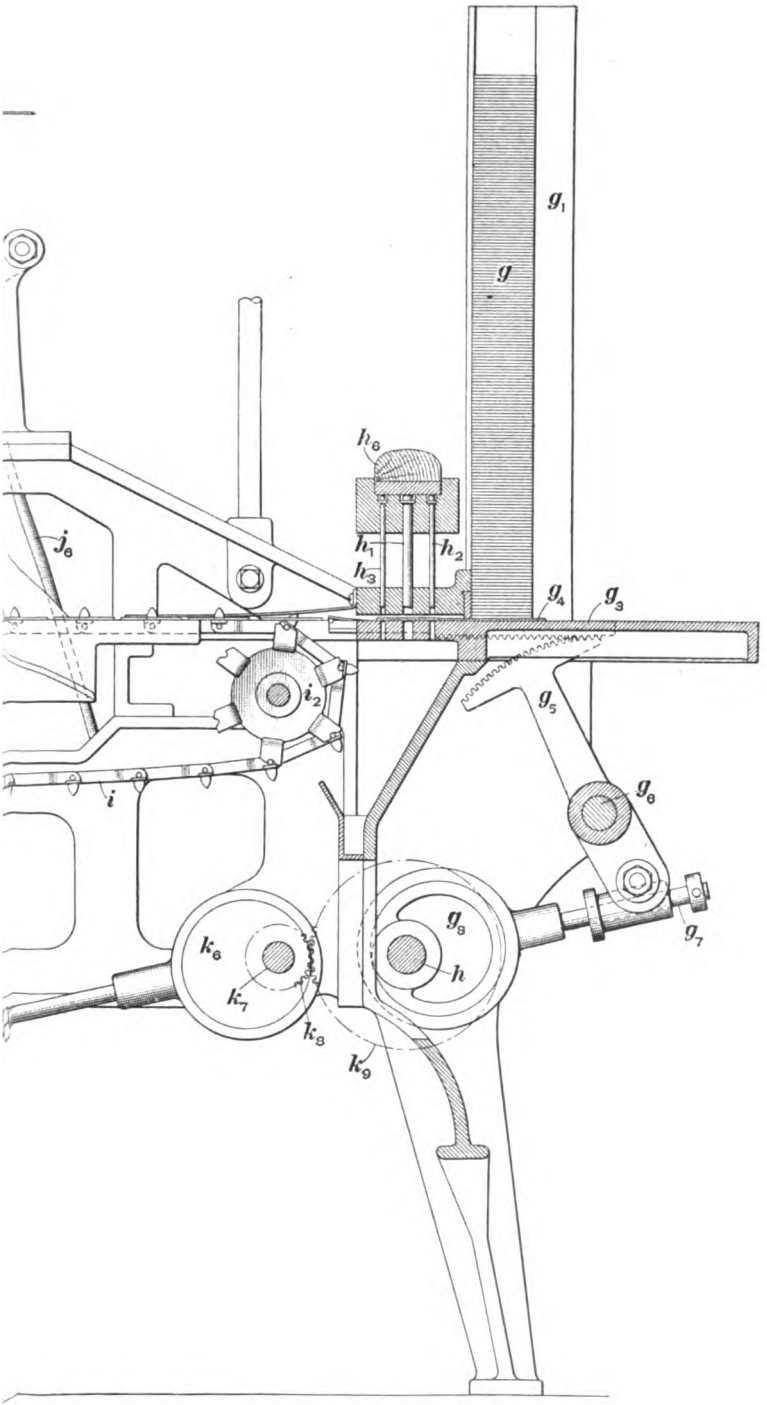

Digitized by Google

Digitized by Google

through the needle. A shuttle k that carries a specially wound cop of cord passes through the loop formed by the cord in the needle, thus securely locking this cord and lacing the cards together. The twine for the needles may be taken from balls placed in a stand above the machine that is supported by two upright rods, as shown in Fig. 15, or it may be taken from the spools directly below this stand, as shown in the same figure.

15. Feed-Mechanism.—Referring to Fig. 16 and also to Fig. 17, which shows an enlarged view of the feed-motion of the machine, the manner in which the rack g_3 is pushed

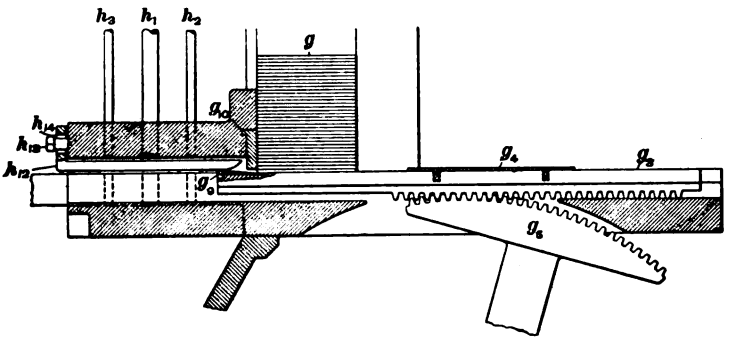

FIG. 17

forwards in order to bring a new card into position is as follows: On the under side of the rack g_3 are teeth that are engaged by a segment g_5 cast with a sleeve carried by the shaft g_4; this sleeve supports two segments similar to g_5, as shown in Fig. 15. Also cast with the sleeve is an arm connected at its lower end to a sleeve on the eccentric rod g_7, which is worked by the eccentric g_8 on the shaft h. As the shaft h revolves, the eccentric g_8 works the eccentric rod g_7 back and forth, so that the collar setscrewed to the end of this rod comes in contact with the sleeve and draws it to the left when the rod is moving in this direction, while a hub on this same rod forces the sleeve to the right when the rod g_7 is moving in the opposite direction. By this means, the arm g_6 is given a backward-and-forward motion, and as its

Digitized by Google

teeth engage with the teeth on the lower side of the rack g_3, this rack is also carried backwards and forwards. As a new card is brought into position, a spring g_6 carried by the forward end of the rack g_3 engages with the card that has just been punched and pushes this card forwards into position for the pegs on the sprocket chain i to engage with the peg holes in the card. As the rack is next moved back, a weight h_{12} drops on the card just brought forwards to be punched and holds it in position. This weight is attached to the framework of the machine by a screw h_{13} that works in a slot h_{14} of the weight, this slot being sufficiently large to allow the weight h_{12} a slight vertical movement. A piece g_{10} situated directly in front of the cards is capable of being adjusted to allow only sufficient space between its lower edge and the top of the rack g_3 for one card to be pushed forwards at a time, thus lessening the liability of two cards being pushed forwards at once by the plate g_4.

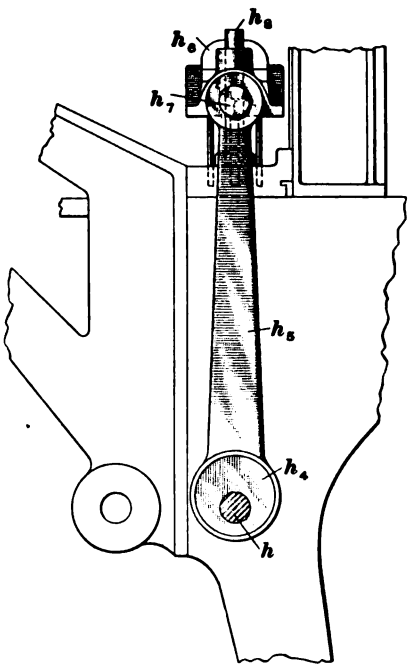

FIG. 18

16. Construction of Head.—The head h_6 that carries the punches is raised and lowered by means of an eccentric h_{11}, Figs. 15 and 18, on the shaft h; this eccentric carries an eccentric arm h_{10} connected to a stud h_7 on the head h_6. One of these connections is at each end of the head, while two guide rods, one of which is shown at h_{15}, Fig. 18, are provided in order to insure the head receiving a true vertical rise and fall.

Digitized by Google

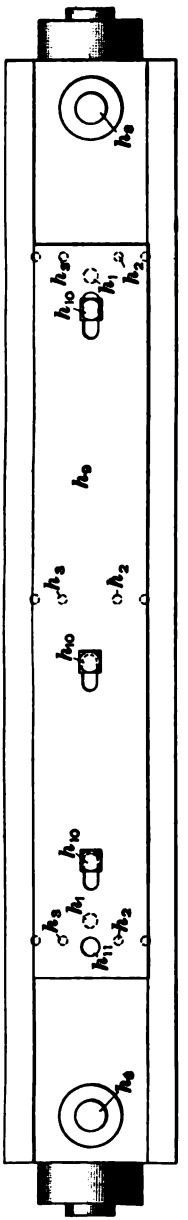

FIG. 19

It is in some cases necessary to lace cards that have been punched in the piano machine, while in other cases it is necessary to lace a set of blank cards. For instance, after the pattern has been punched in the cards by the piano machine, since this machine does not lace the cards together, it is necessary to pass them through the lacing machine, in order that they may be in suitable form to be attached to the jacquard machine; while if it is desired to lace cards together that are afterwards to have the pattern punched in them, as described later, it is necessary to pass blank cards through the lacing machine.

In case it is desired to lace cards that have the pattern punched in them, the peg holes and the lace holes will also have been punched; therefore, in case the peg-hole punches on this machine are now made to operate, there is some liability of their enlarging the peg holes previously punched, which would be detrimental to the good work of the cards when placed on the cylinder of the jacquard machine. This is provided for as follows, reference being made to Fig. 19, which is a plan view of the head: A plate h_8 that is bolted to the head rests directly over the punches, as shown in the figure; consequently, when the head is forced down, the punches, coming against this plate, are brought down with the head and puncture the cards. When, however, it is not desired to use the peg punches, the bolts h_{10} are loosened and the plate h_8 moved to the right. This brings the hole h_{11} directly over the peg punch h_1 at this end

Digitized by Google

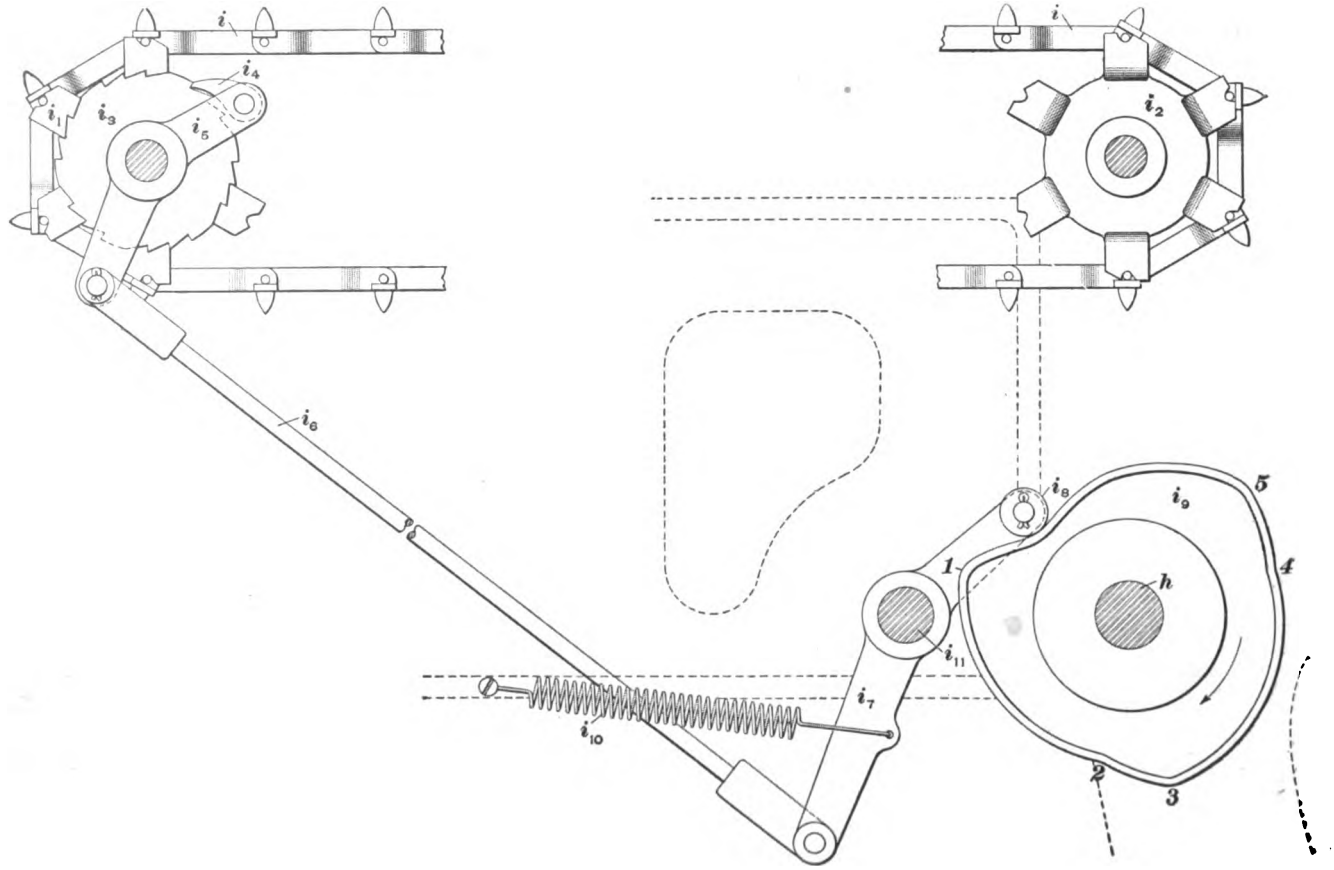

FIG. 20

Digitized by Google

of the head, while the slot in the plate h_8 through which the bolt h_{10} at the extreme right of the plate passes is enlarged sufficiently at its right-hand end to allow the peg punch at this end of the plate to pass through the slot. When the plate is in this position and the head is brought down, if the lower end of the peg punch does not exactly fit the peg hole previously cut in the card, the punch will be pushed up through the holes in the plate h_8, and consequently will not enlarge the peg holes previously cut.

By properly constructing the plate h_8, the lace-hole punches may be rendered inoperative by the same movement of the plate that renders the peg-hole punches inoperative. It is not an uncommon practice, however, to so arrange the holes in the plate h_8 as to keep the lace-hole punches in an operative condition, in order to cut the lace holes in the cards in the lacing machine. Lace holes can be cut in this machine much more quickly than in the piano machine and with sufficient accuracy for lacing purposes. It will be noticed that in Fig. 19 two additional punches are shown at each end of the head and also in the center. These punches are for the purpose of making small semicircular cut-outs at the edges of the card. These cut-outs, of course, are in direct line with the lace holes and form small spaces for the lacing cord to pass through, thus allowing the cards to come closer together than would otherwise be possible.

17. Carrier Chain.—The drive of the sprocket carrier chain i is shown in Fig. 20. The sprocket gear i_1 and ratchet gear i_2 are both fastened to the same shaft and the latter is revolved by means of the pawl i_4 on the lever i_5. The chain i imparts the motion of i_1 to i_2. Connected to the lever i_5 is a rod i_6 that, in turn, is connected at its lower end to a lever i_7 pivoted on the stud i_{11}. The lever i_7 carries at its other end a cam-bowl i_8 that by means of the spring i_{10} is kept constantly in contact with the face of the cam i_9 on the shaft h. As the cam i_9 revolves, the projections on the cam raise the cam-bowl i_8, while the depressions on the cam allow the spring i_{10} to lower the cam-bowl. This up-and-down

Digitized by Google

motion of the cam-bowl being communicated to the pawl i_4, through levers i_7, i_8 and rod i_9, will cause the pawl to turn the ratchet gear i_3, which, as it is fast to the shaft carrying the sprocket gear i_1, will turn this gear, thus driving the chain i. The pegs in the chain i are so spaced that when they pass through the peg holes of the cards, the cards will be the correct distance apart for being placed on the jacquard cylinder.

In lacing the cards, the needle j, Fig. 16, is passed through each lace hole at one end of the cards and also between two consecutive cards. The distance between the two lace holes on one end of the card is greater than the distance between one of these lace holes and that edge of the card at which it is situated; consequently, when the needle is passed through the first lace hole of a card and it is necessary to move the card into position for the needle to pass through the other lace hole of the same card, the chain i must be given a greater motion than is necessary when moving the card forwards to bring it into position for the needle to pass down between this card and the next one after the needle has passed through the second lace hole. In order to give this varying motion to the chain i, the cam i_5, Fig. 20, has a deeper depression so as to allow the pawl i_4 to move back over the long tooth in the ratchet i_3, thus giving a greater movement when moving the card from one lace hole to the other than at any other time; the ratchet gear i_3 has its teeth spaced to agree with the face of the cam i_5.

To understand more fully this point, the position of the different parts will be followed, starting with the cam-bowl i_6 and the cam i_5 in the position shown in Fig. 20. When the parts are in this position, the needle has passed through the first lace hole of the card and had its thread locked by the shuttle. It is now necessary to move the card from the first to the second lace hole—a greater movement than is given to the card at any other time. As the point on the cam with which the cam-bowl is in contact in Fig. 20 is nearer the center of the cam than any other part, the cam-bowl when moving from its present position to the

Digitized by Google

point *1*, will give the greatest throw to the pawl i_4 and bring the second lace hole of the card directly under the needle. As the cam is moving from *1* to *2*, the needle will pass through this lace hole, while the pawl i_4 will be brought back to engage with the next tooth of the gear i_3. The cam-bowl in moving from *2* to *3* moves the cards sufficiently to bring the space between the laced card and the next one directly below the needles. As the cam-bowl is moving from *3* to *4* the needle passes between the two cards, while the pawl i_4 is again brought back to engage with the next tooth of the ratchet i_3. From *4* to *5* is occupied in moving the

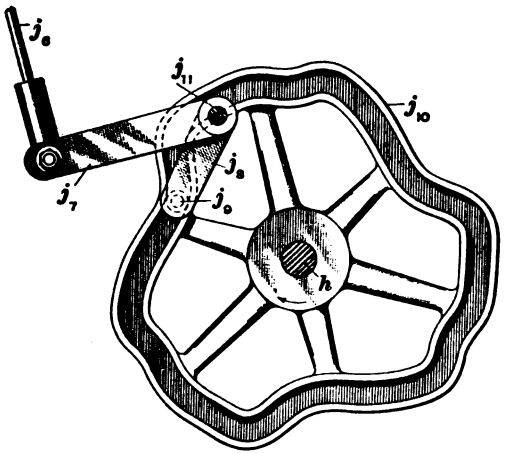

FIG 21

chain forwards until the first hole of the second card is brought below the needles, while from *5* to the point at which the cam-bowl is shown resting on the cam, is occupied in passing the needles through the first holes of this second card and bringing the pawl i_4 back for its greatest throw.

18. Lacing Mechanism.—The needles j, Fig. 16, are attached to a rack j_1 having teeth that engage with the gear j_2 situated on the shaft j_3. This shaft, as shown in Fig. 15, carries three gears similar to j_2, each of which drives a rack j_1 carrying a needle j. Fast to the shaft j_3, Fig. 16,

Digitized by Google

is a gear j_4 engaged by a quadrant j_5 that is connected to a rod j_6. The lower connections of this rod are shown in Fig. 21. At one end of the shaft h is a cam j_{10}, also shown in Fig 15, that has working in its course a cam-bowl j_9 carried by an arm j_8 that is attached to j_{11}, which also carries an arm j_7 that is attached to the lower end of the rod j_6. The arms j_7, j_8 act as an elbow lever and serve to raise and lower the rod j_6 and, consequently, the quadrant j_5, Fig. 16, as the cam revolves. This up-and-down motion of the quadrant j_5, being transmitted to the shaft j_3 by the gear j_4, gives the desired motion, by means of the gears j_3, to the racks j_1 and

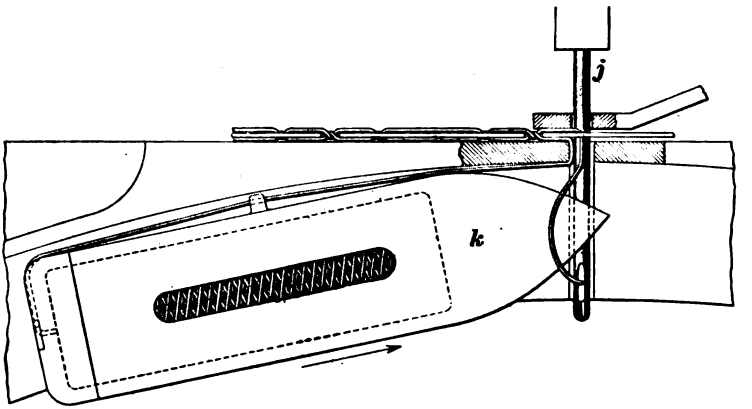

FIG. 22

needles j. The cam j_{10}, Fig. 21, is so constructed as to give three complete up-and-down motions to the racks for every revolution that it makes, while, in addition, there is also given to the racks when at their extreme downward position a slight upward motion, after which they are again brought to their extreme lowest position. This motion is provided in order to cause the cord drawn through the needle to form a slight loop below the cards, which is sufficiently large for the nose of the shuttle k to enter, as shown in Fig. 22.

For each set of lace holes there is a support similar to k_1, Fig. 16, that carries a shuttle k; the support is carried by an arm k_2 attached to a shaft k_3. An arm k_4 that is also attached

Digitized by Google

to the shaft k_3 is connected to an eccentric rod k_8 operated by an eccentric k_9 on the shaft k_7; consequently, as the shaft k_7 revolves, the eccentric k_9, through the eccentric rod k_8 and arm k_4, gives an oscillating motion to the shaft k_3, which, being communicated to the shuttle through the arm k_2, gives it its desired motion. These parts are so timed that the shuttle moves to the right just as the loop is formed in the cord carried by the needle j. The shaft k_7 is the driving

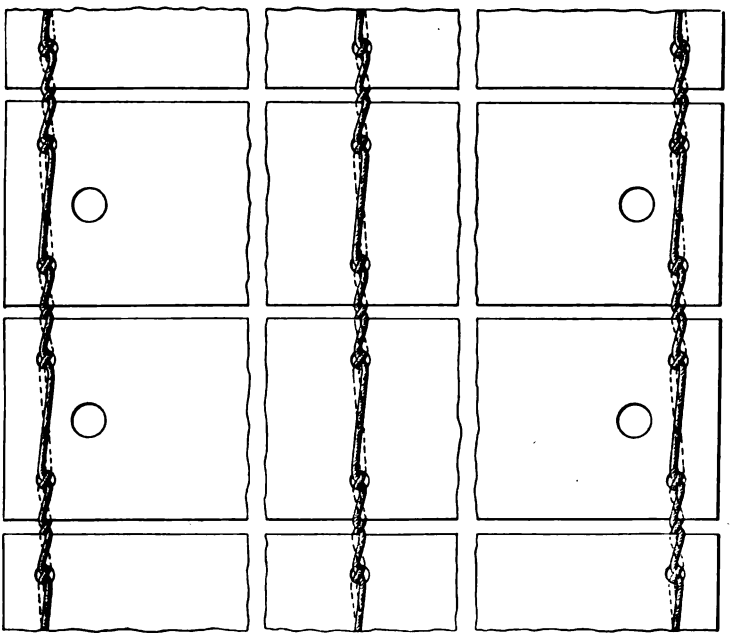

FIG. 23

shaft of the machine and carries a gear k_6 driving the gear k_5 on the shaft h. The gear k_6 contains 25 teeth, while the gear k_5 contains 75 teeth; consequently, the former makes three revolutions to one of the latter.

The position of the shuttle k and needle j, just as the point of the shuttle is entering the loop of the cord carried by the needle, is shown in Fig. 22, while the stitch formed by this operation is shown in Fig. 23, which illustrates cards laced

Digitized by Google

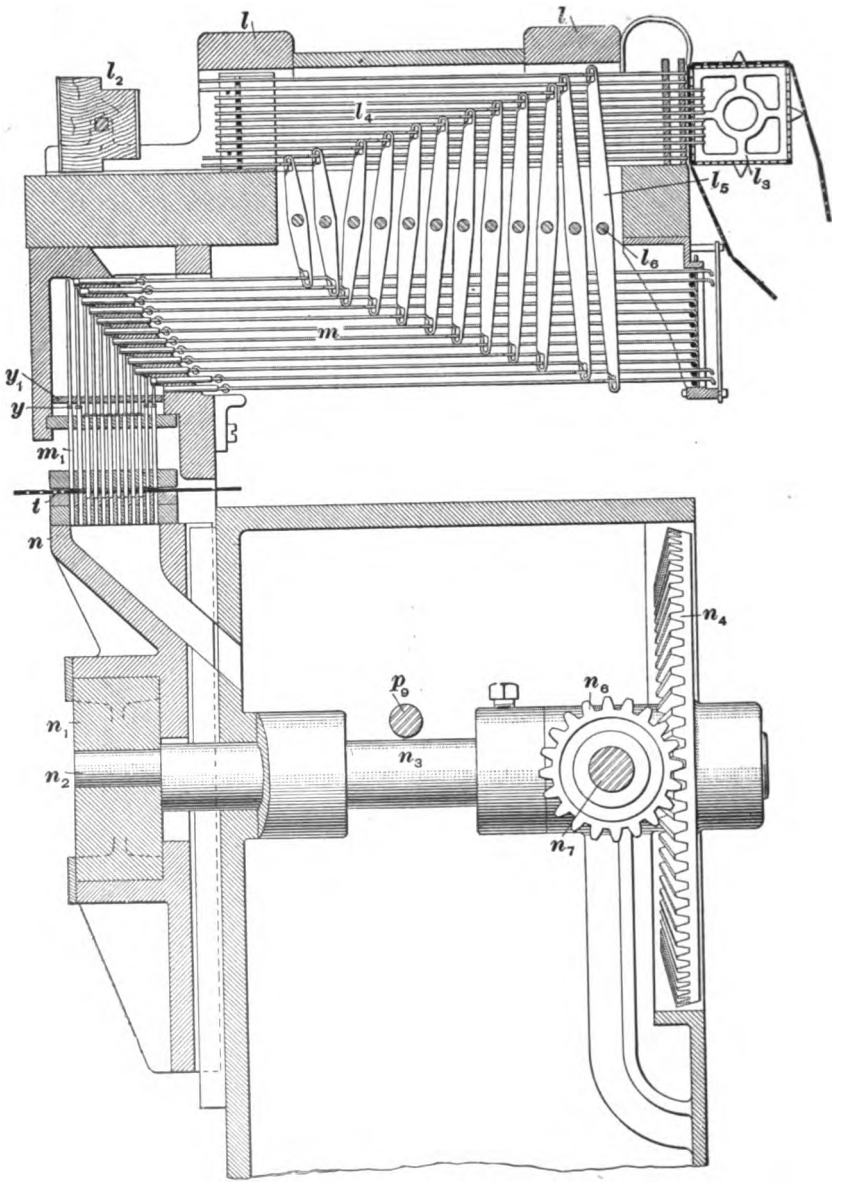

FIG. 25

Digitized by Google

Digitized by Google

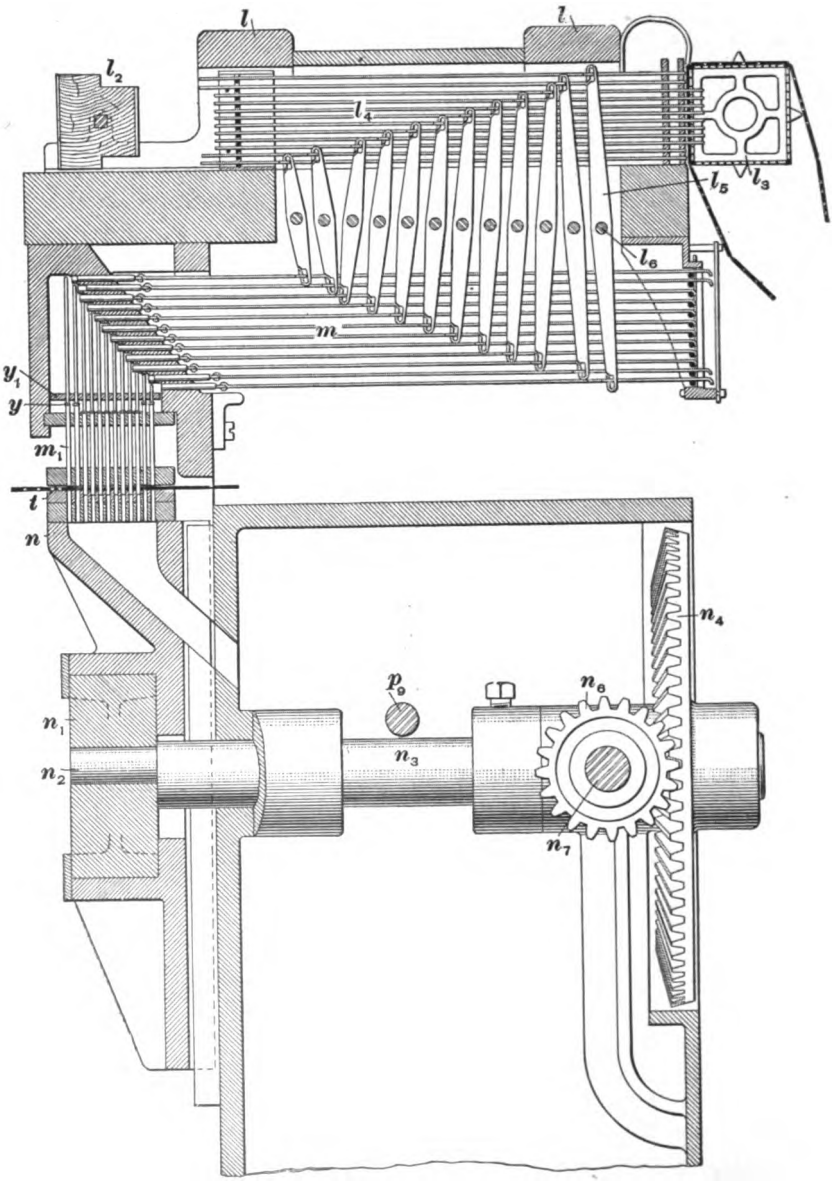

FIG. 25

Digitized by Google

Digitized by Google

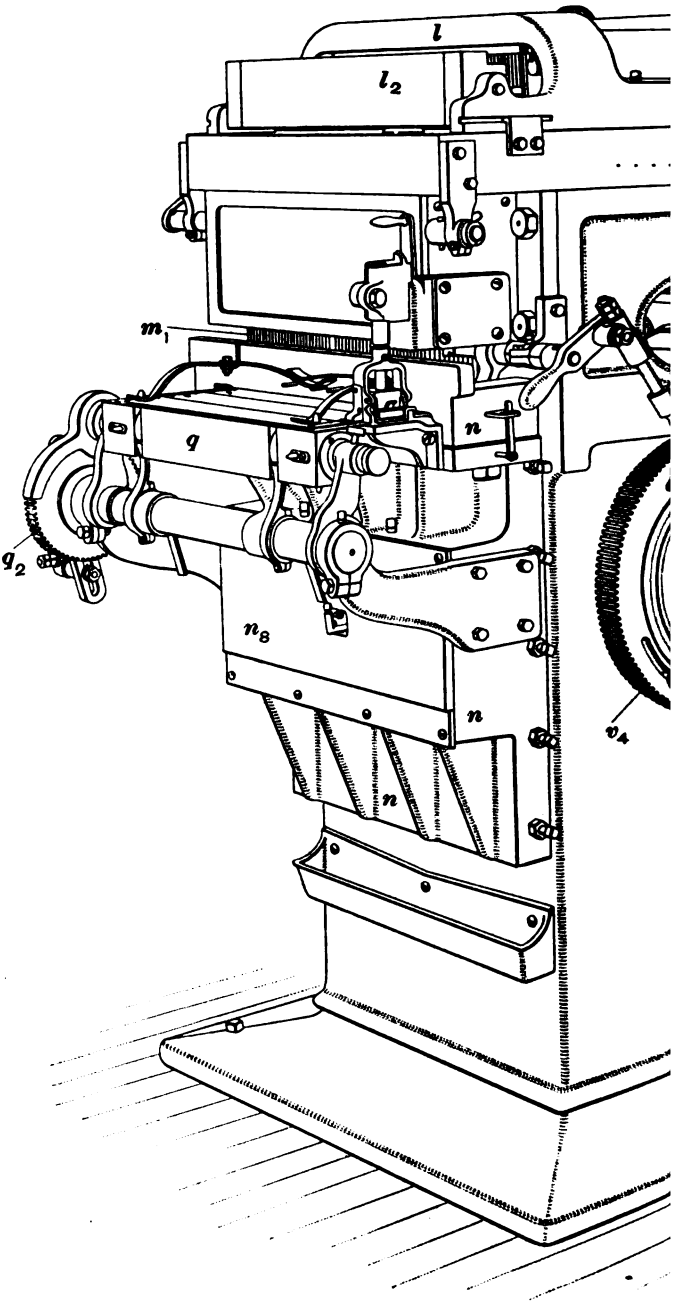

FIG

Digitized by Google

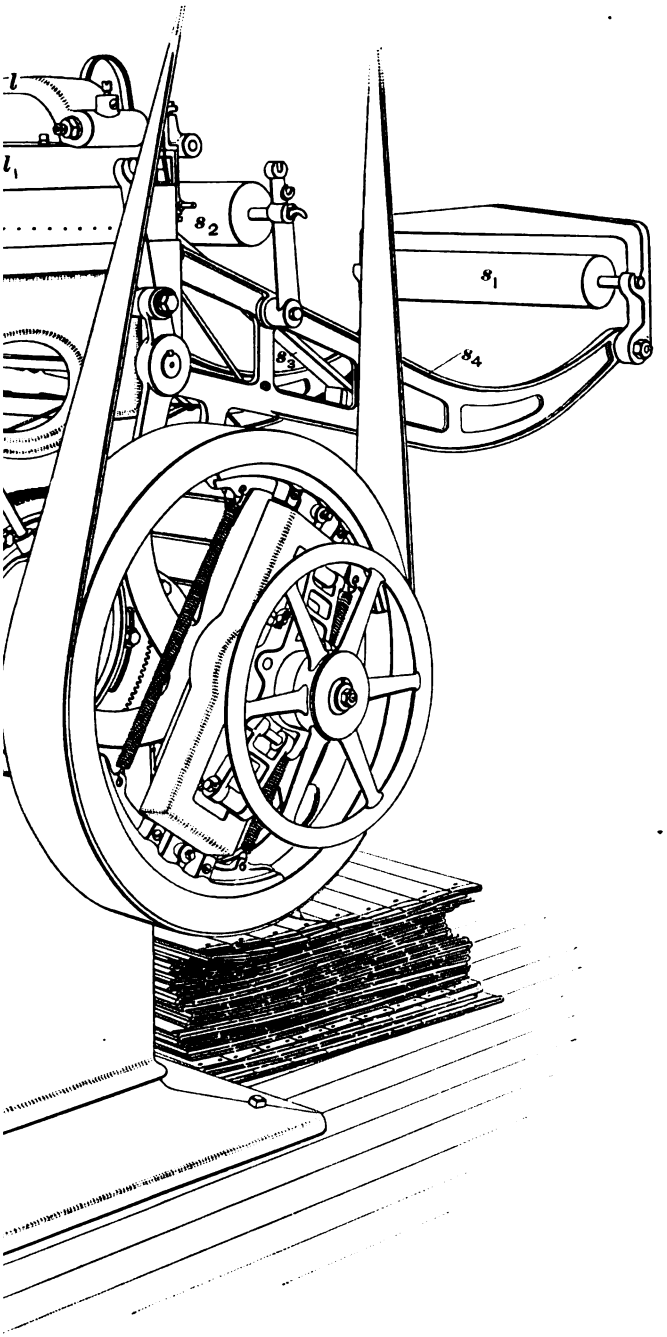

165 15430

Digitized by Google

Digitized by Google

together by this machine. It will be noticed that the cord carried by the needle is always above the cards, while the cord carried by the shuttle is always below the cards; these two cords, however, are crossed at each lace hole and also between consecutive cards.

REPEATING

AUTOMATIC REPEATING MACHINE

19. If a number of jacquard machines are to have the same design woven in them, after a set of cards for one jacquard has been cut on the piano machine, it may be duplicated as many times as desired by means of a machine known as a **repeater.** As this is done automatically and with certain accuracy, the repeating machine saves considerable time and expense as well as insures perfect results. Fig. 24 shows a view of this machine, of the Royle type, while Fig. 25 is a section through the same, showing the principal parts. Referring to these two figures, the carriage l is a hood covering certain portions of the machine. It is given a horizontal reciprocating motion and its sides l_1 rest on the top of the machine. At its forward end it supports a buffer l_2, while at its rear end it carries a cylinder l_3 similar to the cylinders on jacquard machines. Enclosed by the carriage are selecting needles l_4, Fig. 25, supported by the framework of the machine. Attached to these needles are levers l_5 pivoted on rods l_6 that extend from one side of the repeater to the other and are supported by the sides of the machine. Connected to the lower ends of the levers l_5 are rods m, known as *key wires*, controlling keys, the forward ends of which are situated directly above punches m_1. It will be noticed, by referring to Fig. 25, that the key wires vary in length, the upper ones being the longest; the punches also vary in length, the longest being situated in the outside row and the shortest in the inside row.

The operation of these parts is as follows: The cards of the set that has been cut by the piano machine are laced

Digitized by Google

together and passed around the cylinder l_3, Fig. 25. As this cylinder is brought against the face of the selecting needles l_4, those needles that come in contact with the portion of the card that is not cut, are pushed to the left by the card, which gives a corresponding motion to the upper ends of the levers l_5 and results in the lower ends of these levers being moved to the right. This motion of the lower ends of the levers l_5 throws the key wires m and the keys to which they are connected to the right, moving them out of the path of the punches m_1. On the other hand, the selecting needles l_4 that come opposite holes in the card on the cylinder l_3, together with the levers attached to them, remain stationary; and the key wires m and keys, since they are as far to the left as they can go, will therefore lock their respective punches m_1. The cards that are to be punched are laced together as previously described and passed through the repeater; one of these cards is shown in position to be cut at t, Fig. 25. When in this position, the card rests on a carriage n that is situated directly under the punches m_1 and has a vertical reciprocating motion. As the card t is brought into position below the punches, the carriage n rises, carrying the card with it. Those punches that are not locked by the keys are pushed up by the card, and consequently do not puncture it, while those punches that are locked by the keys remain stationary and are pushed through the card as it is forced up by the carriage n. By this means, the holes punched in the cards that come under the punches m_1 are exact duplicates of the holes in the cards that pass around the cylinder l_3.

In order to clearly understand the action of the selecting needles, together with the keys of this machine, it should be remembered that the selecting needles l_4 receive no motion except that imparted to them by the card on the cylinder or by the buffer, while it is the carriage l carrying the buffer l_5 and cylinder l_3 that moves back and forth. When this carriage is moved to the left, the card on the cylinder is brought in contact with one end of the selecting needles, and when the carriage is moved to the right, the

Digitized by Google

Digitized by Google

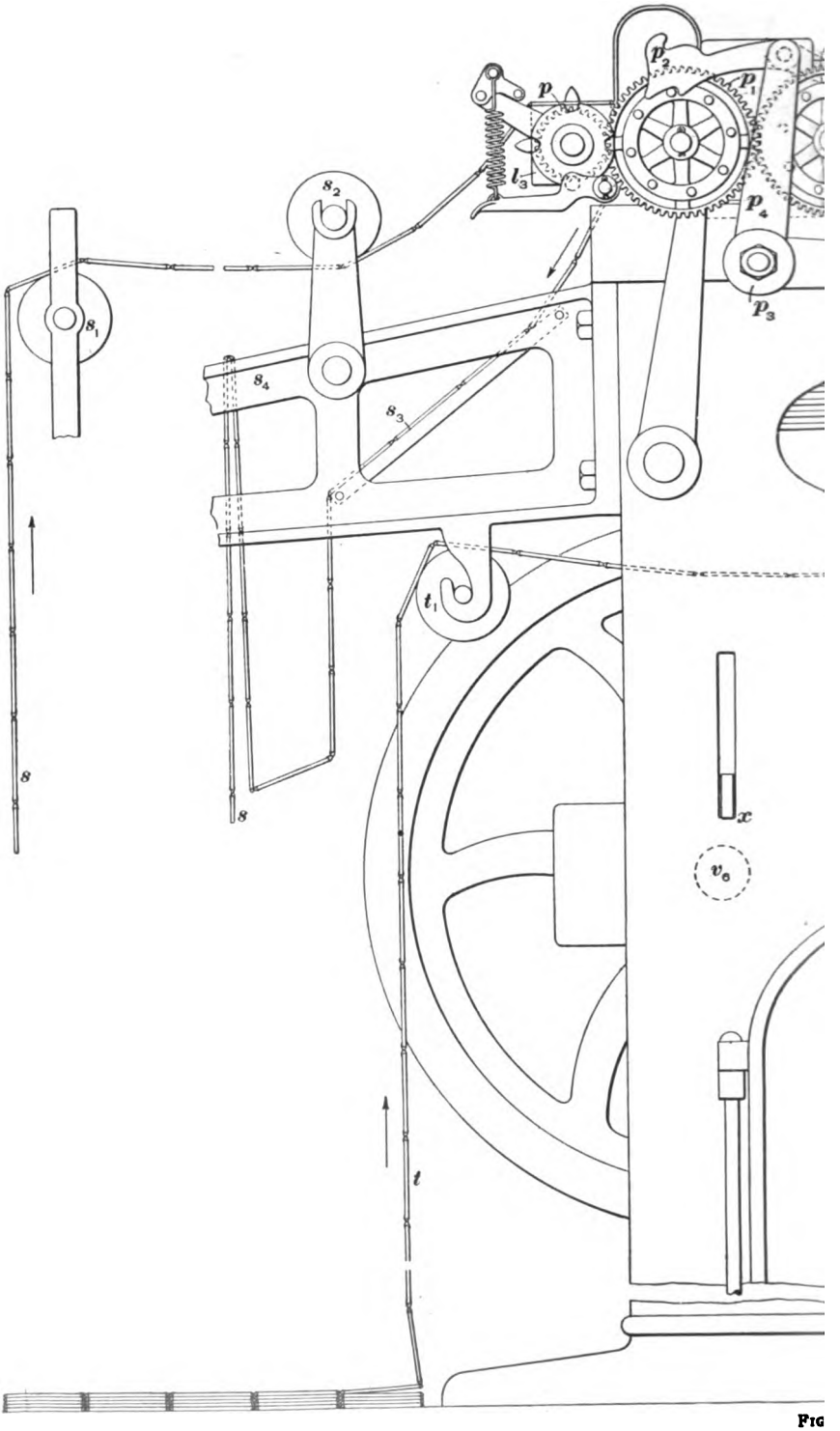

FIG

Digitized by Google

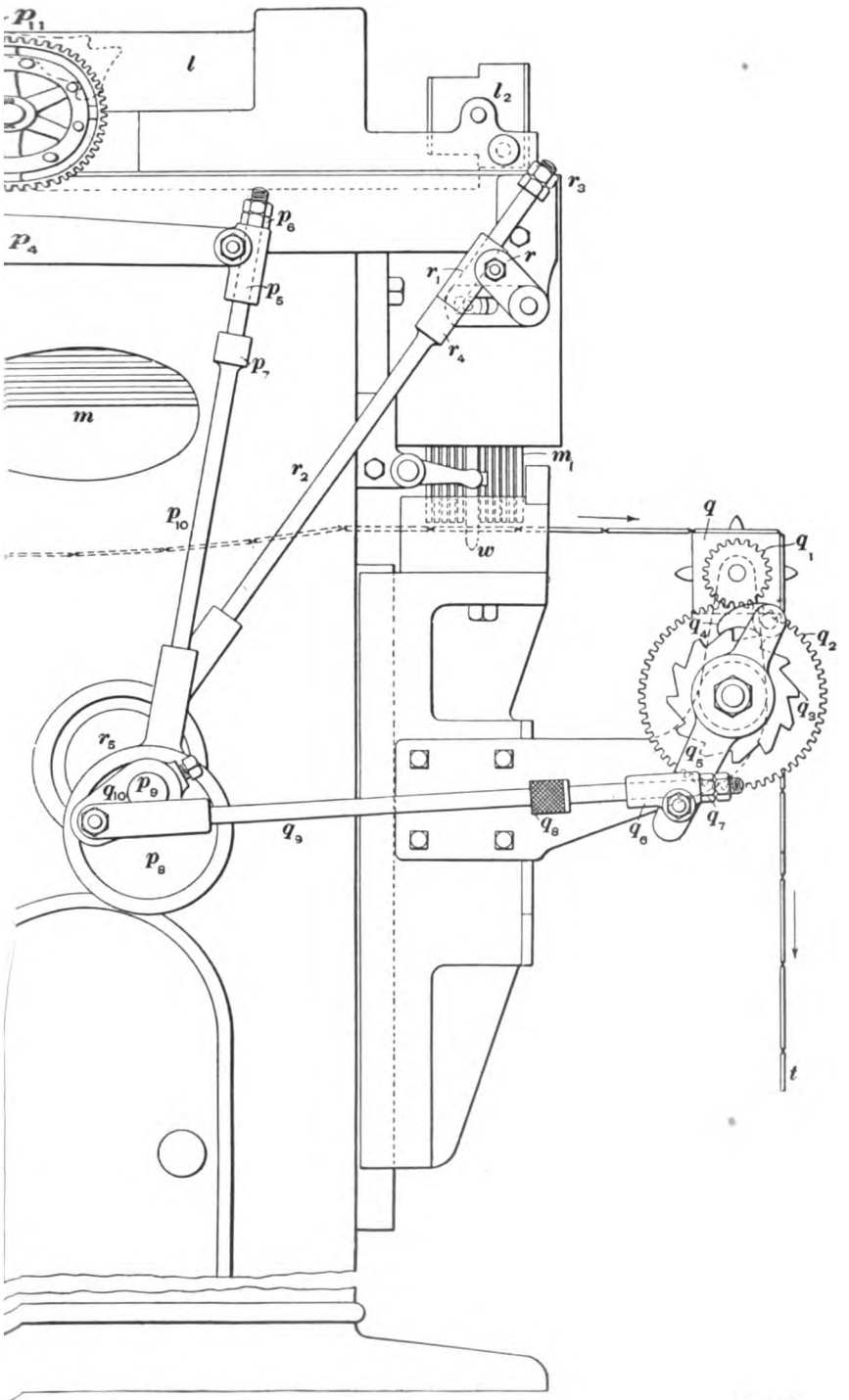

Digitized by Google

Digitized by Google

buffer l_8 is brought in contact with the other end of the needles and moves those previously pushed to the left by the card until all the levers l_8 are in their original positions. It will be noticed that the two faces of the buffer l_2, Fig. 25, are not of the same size. This buffer is capable of being turned over, so that its larger face may be used when cards are being cut for a jacquard machine with 12 hooks in its short row, while the smaller face is used for cutting cards for a machine with 8 hooks in its short row.

20. The manner in which the carriage n, Fig. 25, is given its vertical reciprocating motion is as follows: Keyed to the driving shaft n_7 is a bevel gear n_8 that drives a bevel gear n_4 on the shaft n_3. This shaft, at its forward end, carries an eccentric, or crank, n_5 working in a crosshead n_1 that rests in the carriage n. As the shaft n_3 revolves, any horizontal motion imparted by the crank n_5 is taken up by the crosshead n_1, while any vertical motion is imparted to the carriage n, thus raising and lowering it. The board n_9, Fig. 24, is directly over the crosshead n_1 and forms a casing for this part of the machine.

Fig. 26 shows the drive for certain parts of the machine, also the position that the two sets of cards occupy. The cards s are those that have been cut and that are to be duplicated. They pass over the guide roll s_1, under the roll s_2, and then to the cylinder l_3. From the cylinder l_3 they slide over guides s_3 and finally rest on the cradle s_4. The cylinder l_3 is turned primarily by the eccentric p_8 on the shaft p_9. Connected to this eccentric is an eccentric rod p_{10} that carries a sleeve p_6, attached to which is a lever p_4 pivoted at p_3. Attached to the lever p_4 is a pawl p_5 working a pin on the gear p_1. This gear drives a gear p on the end of the cylinder l_3. As the eccentric revolves on the shaft p_9, the rod p_{10} is forced up, bringing the projection p_7 in contact with the collar p_6 and forcing the pawl p_5 to the left, turning the gear p_1, which drives the gear p and thus turns the cylinder l_3. As the eccentric continues to revolve, the rod p_{10}

Digitized by Google

being lowered brings the set nuts p_6 in contact with the collar p_5, thus bringing the pawl back into such a position that it will engage with the next pin on the gear p_1. In order to understand fully the action of this pawl, it should be understood that the carriage l is continually being moved, first in one direction and then in the other. The fulcrum p_3 of the lever p_4 is also fixed to the carriage l, so that as the latter moves, the position of p_4 relative to the gears p_1 and p_{11} is maintained. It is as the carriage is being moved to the left that the pawl p_3 revolves the cylinder l_3. In this manner the cylinder is away from the needles when it turns, and consequently there is no liability of its injuring the points of the needles.

Sometimes the cards s are moved in the opposite direction to that shown by the arrows in Fig. 26; in such cases it is necessary to revolve the cylinder l_3 in the opposite direction. This is accomplished by swinging the pawl p_3 over until it occupies the position shown by the dotted lines, when it will engage with the gear p_{11}, and, as it turns this gear, it will revolve the cylinder l_3 in the opposite direction.

The cards t, Fig. 26, that are to be cut, are moved in the direction shown by the arrows in this figure. They pass over the guide roller t_1 and thence directly through the machine and to the cylinder q, which is revolved by means of a crank q_{10} driven by the shaft p_6. Attached to this crank is a rod q_9 that passes through a sleeve q_8, to which is attached a lever q_5 carrying at its upper end a pawl q_4 that engages with the ratchet q_3 on the gear q_2. This gear engages with the gear q_1 on the end of the cylinder q. As the rod q_9 is moved forwards and backwards by the crank q_{10}, the casting q_6 and nut q_7 will alternately come in contact with the sleeve q_8, thus moving the pawl q_4 backwards and forwards, so that it will engage with and move the ratchet q_2.

21. In order that the keys that are to be moved to the left may be unobstructed, all punches must be level. To bring down those that were forced up by the card just cut, a

Digitized by Google

plate y_1, Fig. 25, is forced into contact with collars y on the punches m_1. This plate is operated independently of any other part of the carriage n; its motion is derived from the eccentric r_3 on the shaft p_2, Fig. 26. This eccentric is connected to a rod r_2 that carries the projection r_4, set nuts r_3,

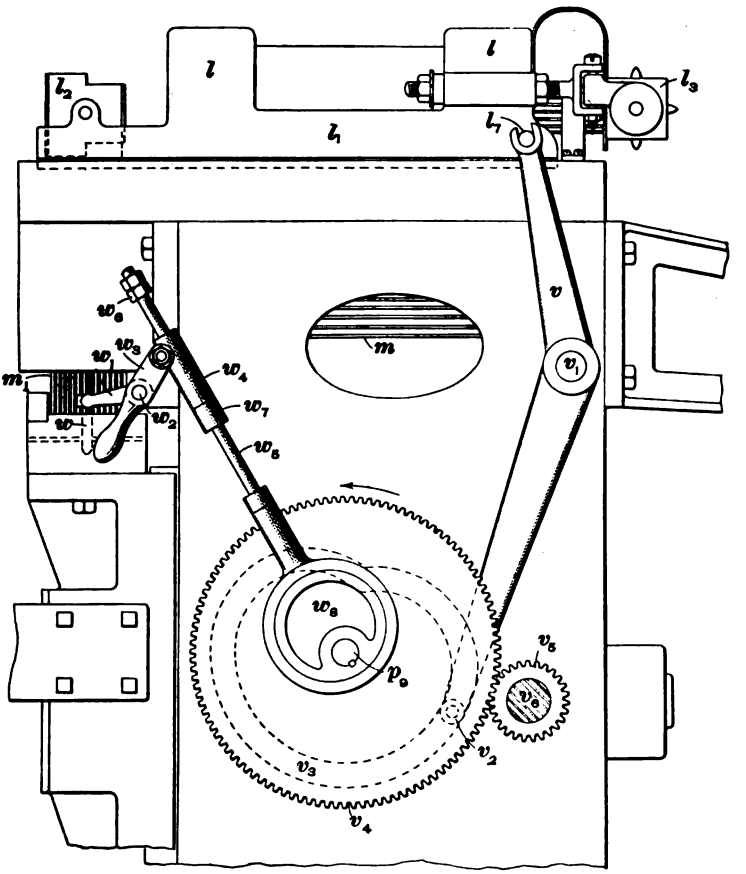

FIG. 27

and collar r_1, which is attached to the lever r. The lever r is secured to the outside end of a shaft that extends entirely through the forward portion of the key box. On the outside of the key box at each end of this shaft are secured forked

Digitized by Google

levers that connect with sliding blocks, which in turn are connected by means of pivots to vertical slides that support the plate y_1 at its opposite ends.

22. The method of imparting motion to the carriage l, Fig. 24, is shown in Fig. 27. The carriage carries a stud l_7 that works in the upper end of the lever v pivoted at v_1; the lower end of this lever carries a cam-bowl v_6 working in the course of the cam v_5. As the cam revolves it forces the cam-bowl v_6, together with the lower end of the lever v, first to the right and then to the left, thus imparting a swinging motion to the upper end of the lever, which being conveyed to the carriage l by means of the stud l_7 gives to this carriage its horizontal reciprocating motion.

23. In order to make certain that the card to be punched is in its correct position below the punches, two pegs w, Fig. 27 (one at each side of the machine), are passed through the peg holes of the card to be punched and hold it securely in its correct position. These pegs are operated independently of the punches, as shown in this figure. Connected to the shaft p_6 is an eccentric w_6 operating an eccentric rod w_5 that passes through a sleeve w_4. The latter is attached to a lever w_3 pivoted on the shaft w_2. This shaft extends across the width of the machine and carries at each end an arm w_1 attached to a peg w. As the eccentric w_6 revolves, the rod w_5 is moved up and down, bringing the collar w_7 and set nuts w_8 alternately in contact with the sleeve w_4, thus imparting an oscillating motion to the shaft w_2, which being imparted to the arm w_1 lowers and raises the pegs w.

Digitized by Google

INDEX

NOTE.—All items in this index refer first to the section and then to the page of the section. Thus, "Binder 51 31" means that binder will be found on page 31 of section 51.

A	Sec.	Page
Action of cams	58	17
Adjusting and setting the filling stop-motion	51	39
" the lug strap	55	18
Adjustment, Hopper	59	25
Alternate-pick loom	52	37
American and European methods, Difference between	61	37
Angular-shed motion	63	28
Apron, The	57	3
Arrangement of harness rolls	58	17
Attaching the picker	62	28
Attachments for three-, four-, five-, and six-harness undercam looms	58	13
" Leno	61	1
" Loom	58	1
" on automatic looms	59	19
Automatic lacer	65	23
" " head	65	26
" lacing	65	23
" let-off motion	56	31
" looms	59	1
" " Attachments on	59	19
" " Types of	59	28
" repeating machine	65	35
" stop-motions	56	3
Auxiliary cam-shaft	58	13
" motions	51	3
" " of a loom	56	30
" " " weaving	51	31

B		
Back and front shafts	62	9
Ball and shoe picking motion	51	23
" Pick	51	23
Balls, Pick	51	4
Banging off	55	23
" " of the loom	57	21
Bar, Heddle	59	3
Bartlett let-off motion	56	31
Beam head, Ratchet	51	33
" Loom	51	2
" "	56	2
Beating up	51	28
" "	56	3
" "	56	22
" " operation	51	3
Bevel of the race plate	56	25
Binder	51	31
"	56	21
" straps and binder settings	57	12
Binders and shuttles, Regulating the	62	27
" Setting	55	19
Black oil	55	36
Board, Reading	65	13
" The comber	64	5
Bobbin splitting	55	30
Bobbins	59	18
Bottom doup	61	20
" " harness frame	61	4
" doups	61	3
Box-chain mechanism	62	13
" " stuff, Care of	55	13
" chains, Building	52	31
" " Method of building	62	19
" end, Connection of picker stick at	62	2
" jumping	55	14
" looms	62	1
" " Fixing of	62	24
" " Power and speed of	62	29
" motion	52	21
" "	53	14
" "	55	13
" " as a whole, Operation of the	62	14
" " Crompton 4 × 1	62	2
" " Still	62	22
" " Timing the	52	29
" motions	62	1

Digitized by Google

	Sec.	Page
Box motions, Timing and setting	53	27
" Shuttle	56	21
" Spring	63	13
Boxes, Driving	53	22
" Leveling the	52	30
" " "	62	25
" Raising and lowering the	62	4
" Shuttle	51	30
" Timing the	62	24
Brake, Loom	56	39
" motion	52	48
Breaking picker sticks	55	27
Broken crow weave	58	3
Building box chains	52	31
" " "	62	19
" harness chains	52	17
" " " for dobbies	60	25
" the harnesses	64	12
Burr of the temple	51	46
Buttoning and chafing behind the reed	55	32

C

Calculating the speed of looms	56	43
Calculations relating to looms	56	43
Cam, Construction of a	56	11
" Dwell of the	51	19
" looms, Construction of	51	4
" " Woolen and worsted	51	1
" motion	52	51
" Picking	56	6
" selvage motions	52	51
" shaft, Auxiliary	58	13
" shafts, Size of gears for	58	15
" Shape of the	56	10
" Throw of a	56	15
Cams, Action of	58	17
" Construction of	51	14
" " "	58	3
" Five-harness satin	58	11
" for $\frac{2}{2}$ twill	58	8
" " $\frac{2}{1}$ twill	58	4
" Four-harness	58	4
" in general	58	1
" Picking	56	17
" Selvage motions of	58	20
" Setting harness	51	20
" " "	57	4
" " picking	57	9
" " tape selvage	58	24
" Shedding by	56	8
" Side	58	26
" Timing the harness	51	21
Card cradles	63	24
" cutting	65	4
Card cutting, lacing, and repeating	65	1
" guides	65	5
" stamping	65	4
Cards, Cutting a set of	65	17
" Lacing	65	21
" Punching	65	9
" The	63	8
Care of chain stuff	55	13
" " filling stop-motion	55	21
" " let-off motion	55	22
" " pattern chain	55	13
" " take-up motion	55	22
Carrier chain	65	29
Casting out	64	33
Catching, Shuttles	62	27
Center stop-motion	51	37
Centered tie	64	29
Chafing and buttoning behind the reed	55	32
Chain, Carrier	65	29
" cylinder drive	52	11
" cylinders, Motions for	52	13
" draft	52	17
" Harness	61	18
" stuff, Care of	55	13
" The harness	61	23
" " "	61	33
Chains and pinion gears	52	47
" Building box	52	31
" " harness	52	17
" for dobbies, Building harness	60	25
" Method of building box	62	19
Classes of jacquards	63	2
Cleaning the looms	55	35
Close shed	52	2
" "	60	3
" " dobbies, Leno weaving on	61	3
Cloth defects	59	26
" Ends floating on face of	63	41
" Fell of the	51	3
" Foreign matter in the	57	28
" roll	51	2
" Thick and thin places in the	55	30
" Thin places in the	57	25
" Weaving plain	61	12
" " "	61	30
Clutch gear, Setting the	60	32
Comber board, Harness lines tied above the	64	20
" " Harness lines tied below the	64	22
" " Passing harness lines through the	64	24
" " The	64	5

Digitized by Google

	Sec.	Page
Combination ties	64	31
Compound shed	60	4
" "	63	33
Conditional take-up motion	52	43
Connection between lifting rod and lever	62	7
" " stop-motion and hopper	59	11
" of picker stick at box end	62	2
Consideration of first hook	64	24
Construction, Details of jacquard	63	10
" Jacquard	63	1
" of a cam	56	11
" of automatic lacer	65	23
" of automatic lacer head	65	26
" of cam-looms	51	4
" of cams	51	14
" of Crompton box motion	62	2
" of different cams	58	3
" of double-cylinder dobby	60	18
" of piano machine head	65	4
" of plain looms, Principle of	56	2
" of single-cylinder dobby	60	5
" of the multiplier motion	62	15
" of the single-lift jacquard	63	4
" of the still box motion	62	22
Continuous take-ups	58	28
Cord, The neck	63	32
Cotton-harness stop-motion	59	3
Coupling, The	63	14
Couplings, The	64	14
" Tying harness lines to	64	20
Cradles, Card	63	24
Crank-shaft, Driving dobby	60	11
" " Setting the dobby	60	28
Crompton box motion	62	2
" fancy loom	53	1
" 4 × 1 box motion	62	2
Cross or London tie	64	9
Crossing	61	2
Crowning hooks	63	41
Cutting a set of cards	65	17
" Card	65	4
" filling	55	27
" the filling	57	27
Cylinder drive	60	11
Cylinder from needle board, Moving	63	14
" Method of turning the	63	14
" motions	63	14
" " Self-acting	63	19
" Setting and timing the	63	43
" " the	60	29
Cylinders, Motion for chain	52	18

D

Dagger, The	56	27
Defects caused outside of weave room	57	28
" Cloth	59	26
" Loom mechanisms and their	55	8
" Shedding mechanism	55	8
Definition of warp line	57	7
Definitions of parts of looms	57	1
Dent of a reed	51	30
Depressor and lifter, Driving	53	8
" mechanism	53	5
Design of looms, One-hand	59	22
Designs, Methods of reading	65	13
Details of jacquard construction	63	10
Device, Harness-leveling	52	7
" Pick-disconnecting	53	28
Difference between American and European methods	61	37
Disadvantage of single-lift jacquard	63	26
Distinction between top and bottom doups	61	20
Dobbies	60	1
" Building harness chains for	60	25
" Double-index and single-index	60	15
" Double-lift and single-lift	60	14
" Fixing	60	27
" Leno weaving on double-lift	61	25
" " " " single-lift	61	3
" Method of driving	60	11
" Operation of parts of	60	23
" Positive and non-positive	60	14
" Power and speed of	60	33
" Right-hand and left-hand	60	18
" Types of	60	14
Dobby, Construction of double-cylinder	60	18
" " " single-cylinder	60	5
" crank-shaft, Driving	60	11
" " " Setting the	60	28

Digitized by Google

	Sec.	Page
Dobby, Double-cylinder	60	18
" Operation of the	60	13
" Single-cylinder	60	5
" Timing and setting the double-cylinder	60	32
" Timing and setting the single-cylinder	60	27
Double-cylinder dobby	60	18
" cylinder dobby, Timing and setting the	60	32
" index and single-index dobbies	60	15
" lift and single-lift dobbies	60	14
" " double-cylinder jacquards	63	36
" " jacquards	63	29
" " or open-shed dobbies	61	25
" " single-cylinder jacquards	63	35
Doup and ground ends	61	2
" Bottom	61	20
" end	61	2
" harness	61	4
Douping	61	2
Doups, Bottom	61	3
" Distinction between top and bottom	61	20
" Right- and left-hand	61	5
" Top	61	20
Draft, Chain	52	17
" Drawing-in	61	7
" Pattern-chain	52	17
Drawing-in	61	22
" " draft	61	7
" " the ends	61	5
Drive, Chain-cylinder	52	11
" Pawl-and-ratchet	60	16
Drives, Cylinder	60	11
Driving boxes	53	22
" dobbies, Method of	60	11
" dobby crank-shaft	60	11
" fancy looms	53	3
" lifter and depressor	53	8
" the head-motion	52	8
Drop-box motion	52	21
" " motions	62	1
" wires	59	3
Dwell of the cam	51	19

E

Early, Picking	57	9
Easer	61	14
Eccentricity of lay	56	23
Effect of position of warp line	57	7
End, Doup	61	2
" Whip	61	2
Ends	51	2
" Drawing in the	61	6
" floating on face of cloth	63	41
" Reeding the	61	8
Equally geared looms	52	36
Erecting and starting looms	55	4
" " " "	57	2
European and American methods of drawing in ends	61	37
Evolution of the loom	56	1

F

Face of cloth, Ends floating on	63	41
Fancy head-motion, Knowles	52	3
" loom, Crompton	53	1
" " Knowles	52	3
" looms, Woolen and worsted	52	1
Fast motion for chain cylinders	52	13
" reeds	56	26
Fastening harness lines	64	17
Feed-mechanism of automatic lacer	65	25
Fell of the cloth	51	3
Filling	51	2
"	56	2
" changing motions	59	9
" " " Setting the	59	24
" Cutting	55	27
" " the	57	27
" kinking	55	28
" Kinks in the	57	26
" Knocking off	55	29
" " "	57	25
" Pick of	56	22
" skipping	63	38
" stop-motion	51	3
" " "	51	37
" " "	53	32
" " "	56	37
" " "	57	16
" " "	59	9
" " " and hopper	59	11
" " " Care of	55	2
" " " Setting the	53	33
" " " Timing the	53	33
First hook, Consideration of	64	24
Five-harness satin cams	58	11
" " " weaves	58	11
Fixer, The loom	55	2
" " "	57	30
Fixing and setting jacquards	63	38
" dobbies	60	27
" looms	57	1
" Northrop looms	59	22
" of box looms	62	24

Digitized by Google

	Sec.	Page
Fixing the looms	61	35
Flannel, Friction	57	15
Floating on face of cloth, Ends	63	41
Follower levers	52	7
Foreign matter in the cloth	57	28
Four-harness cams	58	4
Frame, Bottom doup harness	61	4
Friction flannel	57	15
" let-off motion	56	31
" pulleys	56	42
Frog, The	56	27
Front and back shafts, Operation of	62	9
G		
Gear, Setting the clutch	60	32
" Star	62	8
Gearing for auxiliary cam-shafts	58	14
Gears for cam-shafts, Size of	58	15
" Setting the reverse	52	13
Gingham looms	62	1
Goods, Shaded	55	31
Griff of a jacquard	63	10
" Timing the	63	42
Griffs, The	63	29
Ground and doup ends	61	2
Guard, Shuttle	56	42
Guides, Card	65	5
H		
Hand, Lacing by	65	21
Harness cams, Different settings of	57	5
" " Setting	51	20
" " "	57	4
" " Timing the	51	21
" chain	61	18
" " The	61	28
" " "	61	33
" chains, Building	52	17
" " for dobbies, Building	60	25
" Doup	61	4
" evener motion	52	15
" frame, Bottom doup	61	4
" Jacquard	63	13
" leveling device	52	7
" lines	64	16
" " through the comber board, Passing	64	24
" " tied above the comber board	64	20
" " tied below the comber board	64	22
" " to couplings, Tying	64	20
" " to neck cords, Tying	64	18
Harness of a jacquard	64	4
" rolls	58	17
" skips	55	8
" Standard	61	3
" ties, Styles of	64	7
" tying	64	1
Harnesses	51	2
"	61	3
" Building the	64	12
" Lift of the	60	30
" Operation of	61	9
" Varnishing	64	23
Head, Construction of automatic lacer	65	26
" Construction of piano machine	65	4
" motion, Driving the	52	8
" " Knowles	52	3
" Mechanism for raising and lowering the, of piano machine	65	7
" Ratchet beam	51	33
Heavy-pattern fancy woolen and worsted loom	53	2
Heddle	51	2
" bar	59	3
Heel of the shuttle	57	1
Hook, Consideration of first	64	24
Hooks and needles	63	30
" Crowning	63	41
" missing	63	40
Hopper	59	16
" adjustment	59	25
" Connection between stop-motion and	59	11
I		
Independent cylinder motions	63	15
Intermittent take-up motion	56	35
Invention of the jacquard	63	2
J		
Jacquard construction	63	1
" " Details of	63	10
" Disadvantage of single-lift	63	26
" Double-lift single cylinder	63	29
" Griff of a	63	10
" harness	63	13
" " of a	64	4
" Invention of the	63	2
" machines, Sizes of	63	46
" Single-lift	63	4
Jacquards	63	1
"	64	1

Digitized by Google

	Sec.	Page
Jacquards	65	1
" Double-lift	63	29
" " " double-cylinder	63	36
" Fixing and setting	63	38
" Methods of supporting	64	3
" Single-lift	63	4
" Speed of	63	35
Jumper, Setting the	61	36
" The	61	26
Jumping, Box	55	14
K		
Keeping the loom in good running condition	57	18
Kinking, Filling	55	28
Kinks in the filling	57	26
Knives, Setting the	60	28
Knocking off filling	55	29
" " "	57	25
Knots in the warp yarn, Large	57	29
Knowles fancy head-motion	52	3
" " loom	52	3
" head-motion	52	3
" shedding mechanism	52	3
L		
Lacer, Automatic	65	23
" head, Construction of automatic	65	26
Lacing, Automatic	65	23
" by hand	65	21
" card cutting, and repeating	65	1
" cards	65	21
" mechanism	65	31
Large knots in the warp yarn	57	29
Late, Picking	57	9
Lay	51	3
" of the loom	56	22
" over or repeating tie	64	27
" swords	51	11
Lease rods	56	42
" "	57	6
Left- and right-hand doups	61	5
" hand and right-hand dobbies	60	18
" " loom	57	1
" " shuttle	57	1
Leno attachments	61	1
" weaving on double-lift dobbies	61	25
" " " single-lift dobbies	61	3
Let-off and take-up motions	57	17
" " motion	51	3
" " "	51	31
" " "	53	40
" " " Care of	55	22
Let-off motion, Friction	56	31
" " " Morton's	56	33
" " motions	56	3
" " "	56	30
Leveling the boxes	52	30
" " "	62	25
Lever and lifting rod, Connection between the	62	7
" Lifting	62	3
Levers, Follower	52	7
Lift of the harnesses	60	30
Lifter and depressor, Driving	53	8
" mechanism	53	5
Lifting lever	62	3
" rod and lever, Connection between the	62	7
Line, Warp	57	7
Lines, Harness	64	16
Lock-knife	52	6
" "	53	25
London or cross-tie	64	9
Loom, Alternate-pick	52	37
" attachments	58	1
" Auxiliary motions of a	56	30
" Banging off of the	57	21
" beam	51	2
" "	56	2
" brake	56	39
" Crompton	53	1
" Evolution of the	56	1
" fixer, The	55	2
" " "	57	30
" fixing, General	55	23
" " Woolen and worsted	55	1
" in good condition, Keeping	57	18
" Knowles fancy	52	3
" Lay of the	56	22
" Left-hand	57	1
" mechanisms and their defects	55	8
" Operation of the	56	2
" Pick-and-pick	52	3
" Plain	56	3
" Power necessary to drive a	56	43
" Principal motions of a	56	8
" Production of a	51	48
" pulleys	56	42
" Right-hand	57	1
" settings	57	4
" Shedding mechanism of a	58	24
" temples	56	40
" The	55	1
" " Northrop	59	1
" Worsted and woolen, fixing	55	1
Looms	51	1
" Attachments for undercam	58	13

Digitized by Google

	Sec.	Page
Looms Attachments on automatic	59	19
" Automatic	59	1
" "	59	28
" Box	62	1
" Calculating the speed of	56	43
" Calculations relating to	56	43
" Cleaning the	55	35
" Definitions of parts of	57	1
" Driving fancy	53	3
" Erecting and starting	55	4
" " " "	57	2
" Equally geared	52	36
" Fixing	57	1
" " Northrop	59	22
" " of box	62	24
" " the	61	35
" Gingham	62	1
" Oiling the	55	35
" One-hand design of	59	22
" Plain	56	1
" Power and speed of box	62	29
" Setting the plain	56	6
" Space occupied by	56	43
" Unequally geared	52	36
" Weight and power of Northrop	59	27
" Woolen and worsted fancy	52	1
" " " " "	53	1
Loose reeds	56	28
Lowering and raising the boxes	62	4
" and raising the head of piano machine	65	7
Lug strap, Adjusting the	55	18
" " Setting the	57	10

M

Machine, Automatic repeating	65	35
" head, Piano	65	4
" Piano	65	4
Machines, Sizes of jacquard	63	46
Marks, Reed	55	31
Matter in the cloth, Foreign	57	28
Matters of importance, Minor	55	35
Mechanism, Box-chain	62	18
" Depressor	53	5
" for moving cylinder from needle board	63	15
" for raising the head	65	7
" Knowles shedding	52	3
" Lacer	65	31
" Lifter	53	5
" of a loom, Shedding	58	24
" Shedding	51	8
" "	53	4
Mechanisms and their defects, Loom	55	8
Mechanisms, Defects of shedding	55	8
" Picking	52	36
" Take-up	52	40
Method of driving dobbies	60	11
Mispicks	57	27
Missing hooks	63	40
Morton's let-off motion	56	33
Motion, Angular-shed	63	28
" Ball and shoe picking	51	23
" Box	52	21
" "	53	14
" "	55	13
" Brake	52	48
" Care of take-up	55	22
" Conditional take-up	52	43
" Crompton 4 × 1 box	62	2
" Friction let-off	56	31
" Harness-evener	52	15
" Intermittent take-up	56	35
" Let-off	51	3
" " "	51	31
" " "	53	40
" Morton's let-off	56	33
" Multiplier	52	26
" "	62	15
" Object of the parallel	56	20
" Operation of tape selvage	58	23
" Parallel	56	6
" "	56	19
" Picking	51	23
" "	55	15
" Plain selvage	58	20
" Protector	51	3
" "	51	40
" "	53	33
" Ratchet ring take-up	52	40
" Relief	53	26
" Repeat	60	22
" Reverse	52	12
" "	53	11
" Rise-and-fall	63	26
" Rotary-box	52	21
" Self-acting cylinder	63	19
" Selvage	51	3
" "	51	43
" "	53	42
" Setting the filling-changing	59	24
" " " protector	51	42
" " " "	53	36
" " " "	57	15
" " " repeat	60	33
" Skip	65	10
" Sliding pick	52	37
" Still box	62	22
" Take-up	51	3
" " "	51	34

Digitized by Google

	Sec.	Page
Motion, Take-up	53	36
" " "	56	35
" Tape selvage	58	22
" Timing and setting the shedding	53	12
" " the box	52	29
" " " picking	51	26
" " " selvage	53	42
" Undercam	51	10
" "	51	14
" Underpick	56	16
" Universal selvage	52	53
" Worm take-up	52	44
Motions, Automatic let-off	56	31
" Auxiliary	51	3
" Bartlett let-off	56	31
" Box	62	1
" Cam-selvage	52	51
" "	58	20
" Cylinder	63	14
" Drop-box	52	21
" " "	62	1
" equally geared, Picking	52	36
" for chain cylinders	52	13
" Filling-changing	59	9
" Independent cylinder	63	15
" Let-off	56	3
" " "	56	30
" " " and take-up	57	17
" of a loom, Auxiliary	56	30
" " " " Principal	56	8
" " weaving, Auxiliary	51	31
" " " Principal	51	3
" " " "	51	8
" Revolving-box	62	1
" Selvage	52	51
" Setting the take-up	57	17
" Side-cam shedding	51	10
" Take-up	56	3
" Timing and setting box	53	27
Moving cylinder from needle board	63	15
Multiplier	52	26
"	52	35
" motion	52	26
" "	62	15

N

Neck cord, The	63	32
" cords, Tying harness lines to	64	18
Needle board, Moving cylinder from	63	15
Needles and hooks	63	30
" The	63	11
Non-positive action of cams	58	17
" " and positive dobbies	60	14
Northrop loom, The	59	1
" looms, Fixing	59	22
" " Weight of and power required by	59	27
Norwich or straight tie	64	7

O

Object of the parallel motion	56	20
Oil, Black	55	36
Oiling the looms	55	35
One-hand design of looms	59	22
Open shed	52	2
" " dobbies, Leno weaving on	61	25
" shedding	60	2
Operation, Beating-up	51	3
" of Crompton box motion	62	2
" " front and back shafts	62	9
" " harnesses	61	9
" " punching cards	65	9
" " the box motion as a whole	62	14
" " the dobby	60	13
" " the loom	56	2
" " the multiplier motion	62	17
" " the single-lift jacquard	63	4
" " the still box motion	62	23
Operations of parts of dobbies	60	23
" " tape selvage motion	58	28

P

Parallel motion	56	6
" "	56	19
Parts of a plain loom	56	3
" " dobbies, Operation of	60	23
" " looms, Definitions of	57	1
Passing harness lines through the comber board	64	24
Pattern chain, Care of	55	13
" " draft	52	17
Pawl-and-ratchet drive	60	16
Piano machine	65	4
" " head	65	4
" " Lowering and raising head of	65	7
Pick-and-pick loom	52	8
" ball	51	23
" balls	51	4
" disconnecting device	53	28
" of filling	56	22
" motion, Sliding	52	37

Digitized by Google

	Sec.	Page
Pick, Power of the	57	19
Picker, Attaching the	62	28
" stick at box end, Connection of	62	2
" sticks	56	20
" " breaking	55	27
" " Starting	57	12
Pickers, Starting	57	11
Picking	51	23
"	56	2
"	56	16
" and shedding	51	3
" cam	56	6
" " point	57	9
" cams	56	17
" " Setting	57	9
" mechanisms	52	36
" motion	51	23
" "	55	15
" " Ball and shoe	51	23
" " Timing the	51	26
" motions, Equally geared	52	36
Plain cloth, Weaving	61	12
" " "	61	30
" looms	56	1
" " Setting up	56	6
" selvage motion	58	20
" weaves	58	1
Plate, Race	51	6
" "	56	7
Point, Picking-cam	57	9
Poor selvages	55	32
Poorly sized yarn	57	29
Position of the shuttle	59	25
" " warp line, Effect of	57	7
Positive action of cams	58	17
" and non-positive dobbies	60	14
Power and speed of box looms	62	29
" " " " dobbies	60	33
" " weight of Northrop looms	59	27
" necessary to drive a loom	56	43
" of the pick	57	19
Preparing harness lines	64	16
Principal motions of a loom	56	8
Principles of weaving	51	2
Production of a loom	51	48
Protector motion	51	3
" "	51	40
" "	53	33
" " Setting the	57	15
" The	56	26
Pulleys	56	42
Punching cards, Operation of	65	9
Purpose of the jacquard	63	1
Putting in warps	55	6

R

	Sec.	Page
Race plate	51	6
" "	56	7
" " Bevel of the	56	25
" Shuttle	51	6
Raising and lowering the boxes	62	4
" and lowering the head of piano machine	65	7
Ratchet beam head	51	33
" ring take-up motion	52	40
Reading board	65	13
" designs, Methods of	65	13
Reed	51	3
" Dent of a	51	30
" marks	55	31
Reeding the ends	61	8
Reeds	56	25
" Fast	56	26
" Loose	56	28
Regulating the binders and shuttles	62	27
" " let-off and take-up motions	57	17
" " shed	51	22
" " "	60	30
" " "	61	35
" " size of shed	57	4
" " yoke	61	36
Relief motion	53	26
Repeater	65	35
Repeating	65	35
" card cutting, and lacing	65	1
" machine, Automatic	65	35
" or lay-over tie	64	27
Repeat motion	60	22
" " Setting the	60	33
Reverse gears, Setting the	52	13
" motion	52	12
" "	53	11
Revolving-box motions	62	1
Right- and left-hand doups	61	5
" hand and left-hand dobbies	60	18
" " loom	57	1
" " shuttle	57	1
Rise-and-fall motion	63	26
Rods, Lease	56	42
" "	57	6
Roll, Cloth	51	2
" Take-up	59	20
" Whip	55	12
Rolls, Harness	58	17
Rotary-box motion	52	21
Rule to find the change gear for required number of picks	56	44
" to find the constant of a take-up motion	56	44

Digitized by Google

	Sec.	Page
Rule to find the production of a loom	51	48
" to find the production of a loom	56	45
" to find the size of gears on cam-shafts	58	15
" to obtain the desired throw of a cam	56	15
S		
Sateens	58	1
Satin cams, Five-harness	58	11
" weaves, Five-harness	58	11
Self-acting cylinder motions	63	19
Selvage cams, Setting tape	58	24
" motion	51	3
" "	51	43
" "	53	42
" " Plain	58	20
" " Tape	58	22
" " Universal	52	53
" motions	52	51
" " of cams	58	20
Selvages, Poor	55	32
Set of cards, Cutting a	65	17
Setting and fixing jacquards	63	38
" and timing box motions	53	27
" and timing the cylinder	63	43
" and timing the double-cylinder dobby	60	32
" and timing the filling stop-motion	53	33
" and timing the shedding motion	53	12
" and timing the single-cylinder dobby	60	27
" binders	55	19
" " and binder straps	57	12
" harness cams	51	20
" " "	57	4
" picking cams	57	9
" tape selvage cams	58	24
" the clutch gear	60	32
" " cylinder	60	29
" " dobby crank-shaft	60	28
" " filling-changing motion	59	24
" " filling stop-motion	51	39
" " jumper	61	36
" " knives	60	28
" " lug strap	57	10
" " protector motion	51	42
" " " "	53	36
" " " "	57	15
" " repeat motion	60	33
" " reverse gears	52	13
" " take-up motion	57	17
Setting the warp stop-motion	59	23
" up plain looms	56	6
Settings	61	24
" Loom	57	4
" of harness cams	57	5
Shaded goods	55	31
Shafts, Operation of front and back	62	9
Shape of a cam	56	10
Shed	51	2
"	56	2
" Close	52	2
" "	60	3
" Compound	60	4
" "	63	33
" Open	52	2
" "	60	2
" Regulating the	51	22
" " "	60	30
" " "	61	35
" " " size of	57	4
" Split	52	2
" "	60	3
Shedding	56	8
" and picking	51	3
" by cams	56	8
" mechanism	51	8
" "	53	4
" " Defects of	55	8
" " Knowles	52	3
" " of a loom	58	24
" motion, Side-cam	51	10
" " Timing and setting the	53	12
" Open	60	2
Sheds, Types of	52	2
" Varieties of	60	2
Shoe and ball picking motion	51	23
Shuttle	51	2
"	56	2
" box	56	21
" boxes	51	30
" guard	56	42
" Heel of the	57	1
" Left-hand	57	1
" Position of the	59	25
" race	41	6
" Right-hand	57	1
" smashes	55	14
Shuttles	51	27
"	55	20
"	56	21
"	59	17
" and binders	62	27
" catching	62	27
" going crooked and flying out	55	25

Digitized by Google

	Sec.	Page
Shuttles going crooked and flying out	57	23
" Starting	57	14
Side-cam shedding motion	51	10
" cams	58	26
Single-cylinder dobby	60	5
" cylinder dobby, Timing and setting the	60	27
" cylinder, double-lift jacquards	63	29
" cylinder, double-lift jacquards, Speed of	63	35
" index and double-index dobbies	60	15
" lift and double-lift dobbies	60	14
" " jacquard, Disadvantage of	63	26
" " jacquards	63	4
" " dobbies, Leno weaving on	61	3
Size of gears on cam-shafts	58	15
" " shed, Regulating the	57	4
Sizes of jacquard machines	63	46
Skewers	59	18
Skip motion	65	10
Skipping	60	31
" Filling	63	38
Skips, Harness	55	8
Slackener	61	14
Slamming	55	23
Sliding pick motion	52	37
Slips	64	6
Slow motion for chain cylinders	52	13
Smashes, Shuttle	55	14
Solid comber board	64	6
Space occupied by looms	56	43
Speed and power of box looms	62	29
" " " " dobbies	60	33
" of double-lift, single-cylinder jacquards	63	35
" " looms, Calculating the	56	43
Spindle spring	57	27
Split shed	52	2
" "	60	3
Splitting, Bobbin	55	30
Spring box	63	13
" Spindle	57	27
Stamping, Card	65	4
Standard harness	61	3
Star gear	62	8
Starting and erecting looms	55	4
" " " "	57	2
" picker sticks	57	12
" pickers	57	11
" shuttles	57	14
Steel-harness stop-motion	59	7
Sticks breaking, Picker	55	27
" Picker	56	20
" Starting picker	57	12
Still box motion	62	22
Stitching	63	40
Stop-motion, Adjusting the filling	51	39
" " and hopper	59	11
" " Care of filling	55	21
" " Center	51	37
" " Cotton-harness	59	3
" " Filling	51	3
" " "	51	37
" " "	53	32
" " "	56	37
" " "	57	16
" " "	59	9
" " Setting the warp	59	23
" " Steel-harness	59	7
" " Timing the filling	53	33
" motions, Automatic	56	3
" " Warp	59	3
Straight or Norwich tie	64	7
" through tie	64	26
Strap, Adjusting the lug	55	18
" Setting the lug	57	10
Styles of harness ties	64	7
Supplies	55	36
Supporting jacquards, Methods of	64	3
Swords, Lay	51	11

T

	Sec.	Page
Table of chains and pinion gears	52	47
" " sizes of jacquard machines	63	46
Take-up and let-off motions	57	17
" " Continuous	58	28
" " mechanisms	52	40
" " motion	51	3
" " "	51	34
" " "	53	36
" " "	56	35
" " " Care of	55	22
" " " Conditional	52	43
" " " Intermittent	56	35
" " " Ratchet ring	52	40
" " " Setting the	57	17
" " " Worm	52	44
" " motions	56	3
" " roll	59	20
Tape selvage cams, Setting	58	24
" " motion	58	22
Temple	59	19
" Burr of the	51	46
Temples	51	44
"	56	3
"	57	16

Digitized by Google

	Sec.	Page
Temples, Loom	56	40
Thick and thin places in cloth	55	30
Thin places in the cloth	57	25
Throw of the cam	56	15
Tie, Centered	64	29
" Cross or London	64	9
" Lay-over or repeating	64	27
" Straight or Norwich	64	7
" Straight-through	64	26
Ties, Combination	64	31
" Styles of harness	64	7
Tight and loose pulleys	56	42
Timing and setting box motions	53	27
" and setting the cylinder	63	43
" and setting the double-cylinder dobby	60	32
" and setting the filling stop-motion	53	33
" and setting the shedding motion	53	12
" and setting single-cylinder dobby	60	27
" the box motion	52	29
" " boxes	62	24
" " griff	63	42
" " harness cams	51	21
" " picking motion	51	26
" " selvage motion	53	42
Top doups	61	20
Treadles	56	13
Turning the cylinder	63	14
Twill, Cams for $\frac{2}{2}$	58	8
" " " $\frac{3}{1}$	58	4
Twills	58	1
Two-harness work, Undercams for other than	58	1
Tying, Harness	64	1
" " lines to couplings	64	20
" " lines to neck cords	64	18
" in warps	57	3
Types of automatic looms	59	28
" " dobbies	60	14
" " sheds	52	2

U

Undercam looms, Attachments for	58	13
" motion	51	10
" "	51	14
Undercams for other than two harness work	58	1
Underpick motion	56	16
Unequally geared looms	52	36
" " picking motions	52	36
Uneven yarn	57	28
Universal selvage motion	52	53

V

Varieties of sheds	60	2
Varnishing harnesses	64	23

W

Warp	51	2
"	56	2
" line	57	7
" stop-motion, Setting the	59	23
" " motions	59	3
" yarn, Large knots in the	57	29
Warps, Putting in	55	6
" Tying in	57	3
Weak Warps	55	34
Weave, Broken crow	58	3
" room, Defects caused outside of	57	28
Weaves, Five-harness satin	58	11
Weaving	51	1
" Auxiliary motions of	51	31
" on open-shed dobbies, Leno	61	25
" " single-lift dobbies, Leno	61	3
" plain cloth	61	12
" " "	61	30
" Principal motions of	51	3
" " " "	51	8
" Principle of	51	2
Weight of and power required by Northrop looms	59	27
Whip end	61	2
" roll	55	12
Wires, Drop	59	3
Workmanship	55	37
Woolen and worsted cam-looms	51	1
" " " fancy looms	52	1
" " " " "	53	1
" " " loom, Crompton	53	2
" " " " fixing	55	1
Worm take-up motion	52	44

Y

Yarn, Faulty	57	28
Yoke, Regulating the	61	36
" The	61	30

Digitized by Google

Digitized by Google

168 08/00
7002 BUI 29
INFORMATION CONSERVATION
Digitized by Google

Digitized by Google

89068783877
b89068783877a

Digitized by Google

89071909576

B89071909576A

Digitized by Google

DEMCO

K.F. WENDT LIB
UW COLLEGE OF
215 N. ALL AV
WI 53706

Digitized by Google

89071909576

b89071909576a